Hammond Power Solutions Inc.

your *first* source for transformers

Transformer
Product Catalog

www.hammondpowersolutions.com

TABLE OF CONTENTS

INTRODUCTION

HPS, The Company 2
Transformer Terminology 4
Types of Transformers 11
General Transformer Construction Features 14
Transformer Basics 18
Selecting Transformers 20
Compliance with Engineering Standards 22
Transformer Test Standards 23
Quality Management Systems 25
HPS Standard Enclosures 26
HPS Warranty 28

SECTION 1 — Industrial Control & General Purpose Enclosed Transformers

Control Transformer Quick Selection Charts 30
What is a Control Transformer? 31
Overcurrent Protection 32

HPS Imperator® Machine Tool Industrial Control Transformers
Features & Benefits 36
Selection Tables 38
Optional Accessories 45
Wiring Schematic Drawings 64

HPS Spartan® Industrial Open-Style Core & Coil Control Transformers
Features and Benefits 47
Selection Tables 48
Optional Accessories 53
Wiring Schematic Drawings 75

HPS Fusion™ General Purpose Enclosed Transformer
Features and Benefits 55
Selection Tables 56
Optional Accessories 61
Wiring Schematic Drawings 75

Q Series Enclosed Potted Control Transformer
Applications, Features and Specifications 62
Selection Tables 63
Wiring Schematic Drawings 277

SECTION 2 — Buck-Boost Transformers

Why use Buck-Boost Transformers? 82
Buck-Boost Transformer Specifications 82
Steps for Selecting Buck-Boost Transformers 83
Single Phase Selection Tables 84
Three Phase Selection Tables 87
Single Phase Specification Tables 90
Three Phase Specification Tables 91
Single Phase Connection Diagrams 93
Three Phase Connection Diagrams 94
Buck-Boost Transformers - Questions & Answers 95

© Hammond Power Solutions Inc.
Data subject to change without notice.

TABLE OF CONTENTS

SECTION 3 — Three Phase Line Reactors and DV/DT Filters

Why choose a Line Reactor? 100
Construction Features 103
Standard RM Line Reactor Specifications 105
RM Part Number Guide and Three Phase Selection Tables 106
RM Line Reactor Core & Coil Specification Tables 108
RM Line Reactor Enclosed Specification Tables 110
RM Line Reactor Application and Connection Diagrams 112
RM Line Reactor Termination Details 112
RM Line Reactor - Competitor Cross-Reference Table 113
RC DV/DT Filter Applications 114
RC DV/DT Filter Specifications 115
RC DV/DT Filter Part Number Guide and Selection Table 116
RM Line Reactor Open Style Reference Drawings 117
RC DV/DT Filter Open Style Reference Drawings 118

SECTION 4 — Drive Isolation Transformers

Description & Applications 120
Selecting Drive Isolation Transformers 120

Standard Drive Isolation Transformers
Aluminum and Copper Standard Specifications 121
Aluminum Selection Tables 122
Copper Selection Tables 126
Termination Details 131

HPS Tribune™ Energy Efficient Drive Isolation Transformers
Aluminum and Copper Standard Specifications 132
Aluminum Selection Table 133
Copper Selection Tables 137
Termination Details 142

Enclosure Dimensional Drawings 260
Accessories 271
Electrical Schematics and Connections 276

SECTION 5 — Motor Starting Autotransformers

Description and Applications 144
Copper Standard Specifications and Core & Coil Dimensional Drawings 145
Copper, Three Phase, 2-Coil Selection Tables 146
Copper, Three Phase, 3-Coil Selection Tables 147
Optional Thermostats 148

SECTION 6 — Low Voltage Lighting Transformers

Single Phase Applications, Features and Specifications 150
Group A Selection Table 151
Group B Selection Table 151
Group C Selection Table 152
Enclosure Dimensional Drawings 262

© Hammond Power Solutions Inc.
Data subject to change without notice.

TABLE OF CONTENTS

SECTION 7 — Energy Efficient Distribution Transformers

Energy Efficiency Guidelines for the U.S. 154
Energy Efficiency Guidelines for Canada 155
NEMA Premium® Efficiency Transformer Program 156
Product Features and Applications 157
Energy Efficient Distribution Transformers Product Summary 157

HPS Sentinel® - Energy Efficient General Purpose
Single Phase, Aluminum and Copper Standard Specifications 160
Single Phase, Selection Tables 161
Three Phase, Aluminum and Copper Standard Specifications 165
Three Phase, Selection Tables 166

HPS SuperSentinel® Super Energy Efficient General Purpose
Single Phase, Aluminum and Copper Standard Specifications 175
Single Phase, Selection Tables 176
Three Phase, Aluminum and Copper Standard Specifications 180
Three Phase, Selection Tables 181

HPS Synergy® Energy Efficient K-Factor
K-Factor, Harmonics and Non-Linear Loads 189
Aluminum and Copper Standard Specifications 192
Three Phase, Selection Tables 193
HPS SuperSynergy® Super Energy Efficient K-Factor
Aluminum and Copper Standard Specifications 197
Three Phase, Selection Tables 198

HPS Centurion® Energy Efficient Harmonic Mitigating
600V Class Harmonic Mitigating Transformers 202
Three Phase, Aluminum and Copper Standard Specifications 204
Three Phase, Selection Tables 205

HPS SuperCenturion® Super Energy Efficient Harmonic Mitigating
Three Phase, Aluminum and Copper Standard Specifications 214
Three Phase, Selection Tables 215

Enclosure Dimensional Drawings 260
Accessories 271
Termination Details 275
Electrical Schematics and Connections 276

SECTION 8 — Encapsulated Dry-Type Distribution Transformers

HPS Fortress Commercial Encapsulated Transformers
HPS Fortress Applications and Features 224
Single Phase, Standard Specifications 226
Single Phase, Selection Tables 227
Three Phase, Standard Specifications 230
Three Phase, Selection Tables 231

HPS TITAN Industrial Encapsulated Transformers
HPS TITAN Applications 233
HPS TITAN Features and Benefits 234
Single Phase Standard Specifications 235
Single Phase Selection Tables 236
Three Phase Standard Specifications 238
Three Phase Selection Tables 239

Enclosure Dimensional Drawings 260
Accessories 271
Electrical Schematics and Connections 276

© Hammond Power Solutions Inc.
Data subject to change without notice.

TABLE OF CONTENTS

SECTION 9 — Mini Power Plus

HPS PowerPlus Mini Power Center
Description and Applications 242
Features and Benefits 243
Single Phase Selection Tables 244

Enclosure Dimensional Drawings 268
Accessories 271
Electrical Schematics and Connections 289

SECTION 10 — Autotransformers

Description and Applications 246
Three Phase Standard Specifications 247
Three Phase Selection Tables 248

Enclosure Dimensional Drawings 260
Accessories 271
Electrical Schematics and Connections 276

SECTION 11 — General Purpose Medium Voltage Transformers

Medium Voltage Energy Efficient Guidelines 250
Energy Efficient Guidelines for the U.S. 250
Energy Efficient Guidelines for Canada 251

HPS Millennium Energy Efficient Medium Voltage Transformers
Medium Voltage Applications and Specifications 252
Single Phase Aluminum Selection Tables 253
Single Phase Copper Selection Tables 254
Three Phase Aluminum Selection Tables 255
Three Phase Copper Selection Tables 257

Enclosure Dimensional Drawings 260
Accessories 271
Termination Details 275
Electrical Schematics and Connections 276

GENERAL INFORMATION

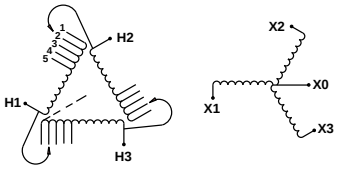

Detailed Enclosure Dimensional Drawings 260
Accessories - For General Purpose Transformers 271
Termination Details 275
Electrical Schematics and Connections 276
Alpha-Numeric Part Number Index 291
HPS Transformer Literature Request Form 316

© Hammond Power Solutions Inc.
Data subject to change without notice.

INTRODUCTION

HPS, The Company 2

Transformer Terminology 4

Principles of a Transformer 10

Types of Transformers 11

General Transformer Construction Features 14

Transformer Basics 18

Selecting Transformers 20

Compliance With Engineering Standards 22

Transformer Test Standards 23

ISO 9001:2008..... 25

HPS Standard Enclosures 26

HPS Transformer Warranty 28

THE COMPANY

Established in 1917, Hammond Power Solutions Inc. (HPS), is an industry leader in magnetic transformer design and development. With our headquarters in Guelph, Canada, HPS operates out of multiple facilities globally. HPS has expanded it's manufacturing and product base to offer the broadest ranges of both standard and specialty transformers

Our engineering experience and capability has resulted in a computer database of over one million transformer designs. We offer the most cost effective, highest quality transformers in order to satisfy your requirements.

The products featured in this catalog are produced in facilities with the most modern manufacturing processes. All products are available through your local **Authorized HPS Distributor**.

GLOBAL PRESENCE

There are HPS facilities in Canada, USA, Mexico, Italy and India to service your global needs.

HPS has the most extensive inventory of any dry-type transformer manufacturer in North America. With ten regional warehouses strategically placed, HPS always has the product you need, where you need it and can deliver it when you need it.

CUSTOMER SERVICE

Our inside sales team are available to answer your questions immediately. They are technically trained and are able to answer most questions on the phone. Stock checks, expediting, quotations or technical information are always readily available. Our commitment to customer service means you will be an informed, relaxed and satisfied customer as quickly as possible. Call our Inside Sales team and let us serve you.

APPLICATIONS

Offering thousands of standard transformers from 25VA to 5MVA and specials up to 34MVA, HPS can meet the needs of your application.

HPS transformers are suitable for any commercial, industrial, manufacturing or production process application. In addition to conventional indoor applications, our dry-type transformers can be built for outdoor locations, including applications where airborne contaminants pose a risk to electrical equipment.

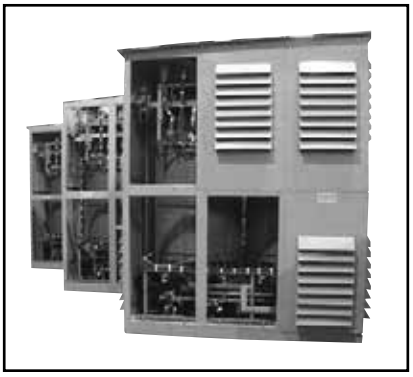

© Hammond Power Solutions Inc.

Data subject to change without notice.

DESIGN CAPABILITIES

Our history and experience in transformer magnetic design is the very best in the industry. Our extensive testing program, including all qualification tests and short circuit testing, plus an exemplary field service record, ensures that our products not only meet all the standards necessary, but more importantly, fulfill your expectations and requirements.

All HPS designs are cost effective and the transformers are built with modern manufacturing techniques. We particularly emphasize our 'Value Added Engineering' where our design staff will work directly with your team to produce the optimum and cost effective solution for your application. Our fully computerized design and CAD facilities permits quick and effective communication when time is vital.

A RELIABLE SOURCE

For over 95 years, HPS has continued to grow from a small family business to the industry leader in dry-type transformer technology. Our customers have come to rely on our products and services and continue to depend on us for support at the most critical stages of their need. Our stability and integrity as a supplier are paramount particularly in an industry where demands must be resolved quickly and effectively.

TECHNICAL SUPPORT

The experienced HPS technical team is available to help you with your application or design questions. Call our regional offices for assistance.

QUALITY ASSURANCE

HPS has been regarded for its quality since its very inception. With our commitment to 'Excellence' and 'Continuous Improvement', we build value and reliability into every HPS product. We feel that no other transformer company can offer comparable flexibility for service and quality in a full range of products. All our units are designed to meet ANSI, CSA, UL, IEC, RoHS and NEMA standards.

© Hammond Power Solutions Inc.

Data subject to change without notice.

TRANSFORMER TERMINOLOGY

Air Cooled
A transformer which uses “air” as the cooling medium. This term is abbreviated with the ANSI designation AA, indicating open, natural draft ventilated construction.

Ambient Noise Level
The noise level of the surrounding area, measured in decibels (dB).

Ambient Temperature
The inherent or existing temperature of the atmosphere surrounding a transformer into which its heat is dissipated.

Ampere
Is the unit of measurement for electric current flow.

ANSI
American National Standards Institute Inc. - one of the recognized organizations which specifies the standards for transformers.

Autotransformer
A transformer which has only one winding per phase, part of which is common to both the primary and secondary circuits.

Banked
Two or more single phase transformers connected together to supply a three phase load.

BIL
Basic impulse level is a means to express the ability of the insulation system to withstand high voltage surges.

Buck Boost Transformer
Two-winding, single phase transformer with low voltage secondary windings which can be connected as an autotransformer. Used to raise or lower single and three phase line voltages by 10 - 20%.

Cast Coil Transformer
Transformer with coils solidly cast in epoxy resin under vacuum in a mold. Also called cast resin or epoxy cast coil transformers.

Center Tap
A reduced capacity tap at the midpoint in a winding.

Coil
Turns of electrical grade wire or strip conductor material wound on a form, referred to as a winding.

Coil Hot-Spot Temperature
The absolute maximum temperature present in the transformer. This number is equal to the sum of the ambient temperature, temperature rise and a variable. T Hot Spot = T ambient + T rise + (10-20)°C.

Common Mode
Electrical noise or voltage disturbance that occurs between all of the line leads and the common ground, or between the ground plane and either line or the neutral.

Compensated Transformer
A transformer with a turns ratio which provides a higher than rated voltage at no load and rated voltage at rated load. These transformers CANNOT be used for reverse feed.

Continuous Rating
The constant load which a transformer can carry its rated primary voltage and frequency, without exceeding its specified temperature rise.

Control Transformer
A transformer which is designed to supply good voltage regulation characteristics when low power factor or high inrush current is drawn. Sometimes referred to as an Industrial Control Transformer.

Core
Electrical grade steel laminations which carry the magnetic flux.

© Hammond Power Solutions Inc.
Data subject to change without notice.

Core Loss
Losses in watts caused by magnetization of the core and its resistance to magnetic flux when excited or energized at rated voltage and frequency. Also referred to as excitation loss or no-load loss.

Current Transformer
Transformer generally used in control or instrumentation circuits for measuring current.

Delta Connection (△)
The delta connection is a standard three phase connection with the ends of each phase winding connected in series to form a closed loop with each phase 120 degrees from the other.

Delta Wye (△ Y)
Delta wye is a term indicating the primary connected in delta and the secondary in wye when pertaining to a three phase transformer bank or three phase transformer.

Dielectric Tests
These tests consist of the application of a voltage higher than the rated voltage for a specified time, for the purpose of determining the adequacy against breakdowns of insulating materials and spacings under normal conditions.

Dry-Type Transformer
A dry-type transformer is one in which the transformer core and coils are not immersed in liquid.

Dual Winding
A winding consisting of two separate parts which can be connected in series or parallel. Also referred to as dual voltage or series-multiple winding.

Efficiency
The percentage of power transferred from the input of equipment to the output of equipment in Watts. (power out/power in x 100)

Electrostatic Shield
Copper or other conducting material placed between the primary and secondary winding and grounded to reduce electrical interference and to provide additional protection.

Exciting Current (No-Load Current)
Current which flows in any winding used to excite the transformer when all other windings are open-circuited. It is usually expressed in percent of the rated current of a winding in which it is measured.

Encapsulated
Transformer with its coils either encased or cast in an epoxy resin or other encapsulating materials.

FCAN
Full Capacity Above Normal. This designates that a transformer will deliver its rated kVA when connected to a voltage source which is higher than the rated voltage.

FCBN
Full Capacity Below Normal. Same as FCAN except that the taps are below rated voltage.

Fan Cooled
A transformer cooled mechanically to maintain its rated temperature rise, typically using auxiliary fans to accelerate heat dissipation.

Flexible Connection
A non-rigid connection used to reduce transmission of noise and vibration.

Flux Density
The magnetic field strength in the core, typically measured in Telsa or Gauss.

Frequency
On AC circuits, designates the number of times the polarity alternates from positive to negative and back again, such as 60 cycles per second. Measured in Hertz.

© Hammond Power Solutions Inc.
Data subject to change without notice.

TERMINOLOGY CONTINUED . . .

Full Capacity Tap
A full capacity tap is one through which the transformer can deliver its rated kVA output without exceeding the specified temperature rise.

Grounding Transformer
A special three phase autotransformer for establishing a neutral on a 3-wire delta secondary. Also referred to as a Zig-Zag transformer.

Grounds or Grounding
Connecting one side of a circuit to the earth through low resistance or low impedance paths.

Harmonic
A Harmonic is a sinusoidal component of a periodic wave having a frequency that is a multiple of the fundamental frequency. For example, a component whose frequency is twice the fundamental frequency is referred to as the second harmonic, (120 Hz is the 2nd harmonic of 60 Hz).

Hertz (Hz)
A term for AC frequency in cycles per second.

High Voltage and Low Voltage Windings
These terms are used to distinguish the winding having the greater voltage rating from that having the lesser in two winding transformers.

Hi Pot
High potential dielectric test impressed on the windings to check insulation materials and clearances.

Impedance
The apparent resistance in a circuit to the flow of an alternating current analogous to the actual resistance to a direct current.

Impulse Test
Dielectric test which determines BIL capability by applying high frequency, steep wave-front voltage between windings and ground.

Induced Potential Test
A standard dielectric test which verifies the integrity of insulating materials and electrical clearances between turns and layers of a transformer winding.

Inductance
A property which opposes a change in current flow.

Inrush Current
High transient current, caused by residual flux in the core, which may be drawn when a transformer is energized.

Insulating Materials
Those materials used to electrically insulate the transformer's windings; turn-to-turn or layer-to-layer, and other assemblies in the transformer such as the core and busswork.

Isolation Transformer
A transformer which insulates the primary circuit from the secondary circuit. Also referred to as a two-winding or insulating transformer.

KVA
Kilovolt ampere rating designates the output which a transformer can deliver for a specified time at rated secondary voltage and rated frequency without exceeding the specified temperature rise. (1 kVA = 1000 VA, or 1000 volt amperes)

Knockouts
Easily removable circle of metal in an enclosure which eliminates the need for punching holes for conduit.

Lamination
Thin sheets of special steel used to make the core of a transformer.

Line Reactor
A device whose primary purpose is to introduce a specific amount of inductive reactance into a circuit, usually to reduce or control current.

© Hammond Power Solutions Inc.

Data subject to change without notice.

Load
The load of a transformer is the power in kVA or volt amperes supplied by the transformer.

Load Losses
Losses in a transformer which are incident to load carrying. Load loses include I^2R loss in the windings due to load current, stray loss due to stray fluxes in the windings, core clamps, etc., and to circulating currents (if any), in parallel windings.

Mini Power Center
A pre-wired power center that combines primary breaker, secondary power panel, and a dry-type shielded transformer.

Mid-tap
A reduced capacity tap midway in a winding. Also referred to as a 'Center tap'. Usually in the secondary winding.

Moisture Resistance
Materials or equipment constructed or treated so that it will not be harmed readily by exposure to a moist atmosphere.

NEC
National Electric Code

NEMA
National Electrical Manufacturers Association.

No-Load Losses (Excitation Losses)
Loss in a transformer which is excited at rated voltage and frequency, but without a load connected to the secondary. No-load losses include core loss, dielectric loss, and copper loss in the winding due to exciting current.

Overload
When a transformer is overloaded, excessive heat develops and the insulation system begins to breakdown. Life expectancy of the transformer is decreased due to heat exceeding the rating of the insulation system.

Parallel Operation
Single and three phase transformers may be operated in parallel by connecting similarly marked terminals, provided their ratios, voltages, resistances, reactances and ground connections are designed to permit parallel operation. Current and voltage angular displacements are also required to be the same in the case of three phase transformers.

Phase
Type of AC electrical circuit, usually single phase 2 wire or 3 wire, or three phase, 3 or 4 wire.

Polarity
Designates the instantaneous direction of voltages in the primary compared to the secondary.

Potential (Voltage) Transformer
A transformer generally used in instrumentation circuits for measuring or controlling voltage.

Power Factor
The relation of watts to volt amps in a circuit.

Primary Taps
Taps added to the primary winding. (see Taps)

Primary Voltage Rating
Designates the input circuit voltage for which the primary winding is designed.

Primary Winding
The primary winding is the winding on the energy input (supply) side.

Rating
The design characteristics, such as primary and secondary voltage, kVA capacity, temperature rise, frequency, etc.

© Hammond Power Solutions Inc.
Data subject to change without notice.

TERMINOLOGY CONTINUED . . .

Ratio (Voltage)
A reference to either the primary to secondary winding turns ratio or to the voltage ratio of the transformer.

Ratio Test
A standard test of transformers to determine the ratio of the primary to secondary voltage.

Reactance
The impedance component due to inductance and/or capacitance.

Reactor
A single winding device with an air or iron core which produces a specific amount of inductive reactance into a circuit, usually to reduce or control current.

Rectifier Transformer
A transformer designed to supply AC input to a rectifier to obtain the desired DC output and have the ability to withstand the heating effects caused by rectifier commutation or ripple.

RCBN - Reduced Capacity Below Normal
Taps which carry full-rated winding current only, thus reducing available power because of lower output voltage.

Regulation
Usually expressed as the percent change output voltage when the load goes from full load to no load at a given power factor.

SCR
A silicon-controlled rectifier.

Saturation
Saturation is a natural condition in which an increase in current results in a decrease in inductance.

Scott Connection
Connection for polyphase using two special single phase transformers. Usually used to change from two phase to three phase or three phase to two phase.

Secondary Voltage Rating
Designates the no-load circuit voltage for which the secondary winding (winding on the output side) is designed.

Secondary Winding
The transformer winding connected to the load or output side.

Series/Multiple
A winding consisting of two or more sections which can be connected for series operation or multiple (parallel) operation. Also referred to as dual voltage or series-parallel.

Short Circuit
A short circuit condition occurs when an abnormal connection or relatively low impedance, whether made accidentally or intentionally, occurs between two points of different potential in a circuit.

Solid State Device
One which contains components that do not depend on electronic conduction in a vacuum or gas. The electrical function is performed by semiconductors or the use of otherwise completely static components such as resistors or capacitors.

Step-Down Transformer
One in which the high voltage winding (primary) is connected to the input or power source and the low voltage winding (secondary) to the output or load.

Step-Up Transformer
A transformer in which the low voltage winding (secondary) is connected to the input or power source and the high voltage winding (primary) is connected to the output or load.

Tap
A tap is a connection brought out of a winding at some point between its extremities, usually to permit changing the voltage or current ratio.

© Hammond Power Solutions Inc.

Data subject to change without notice.

T-Connection
A Scott connected three phase transformer utilizing two primary and two secondary coils called the main and the teaser.

Temperature Class
The maximum temperature that the insulation can continuously withstand. Class of insulation system in a transformer, i.e.

Class 105°C
Class 150°C
Class 180°C
Class 220°C

Temperature Rise
The increase over ambient temperature of the winding due to energizing and loading the transformer.

Total Losses
The transformer electrical losses which include no-load losses (core losses) and load losses (winding losses).

Transformer
A static electrical device which by electromagnetic induction transforms energy at one voltage and current to another voltage and current at the same frequency.

Transient
A temporary or brief change in a given parameter. This is typically associated with input voltage or output load parameters.

Transformer Tests
Normal, routine production tests include: (1) core loss; (2) load loss - winding or copper loss; (3) impedance; (4) hi-pot - high voltage between windings and ground; (5) induced - double induced two times voltage. Optional special tests include: (a) heat run - temperature testing; (b) noise tests - sound level measurement; (c) impulse tests - BIL tests: (d) partial discharge.

Transverse Mode
Electrical noise or voltage disturbance that occurs between phase and neutral (between lines), or from spurious signals across the metallic hot line and the neutral conductor.

UL
Underwriters Laboratories

VPI Impregnation
A vacuum and pressure impregnation process using a resin which is then oven cured to completely seal and protect the surface of a transformer and provides a strong mechanical bond. This process is standard on all HPS transformer products.

Voltage Regulation
The change in secondary voltage which occurs when the load is reduced from rated value to zero, with the value of all other quantities remaining unchanged. Regulation may be expressed in percent (per unit) on the basis of rated secondary voltage at full load.

Volt-Amperes (VA)
The current flowing in a circuit multiplied by the voltage of the circuit. An expression of the output rating of a transformer.

Wye Connection
A standard 3-wire transformer connection with similar ends of the single phase coils connected. This common point forms the electrical neutral point and may be grounded.

Zig Zag Connection
Special transformer connection commonly used in grounded transformers. See also grounding transformers.

© Hammond Power Solutions Inc.
Data subject to change without notice.

WHAT IS A TRANSFORMER?

A transformer is an electrical device which converts alternating current from one voltage to another. It can be designed to “step-up” or “step-down” voltages and works on the magnetic induction principle. A transformer has no moving parts and is a completely static solid state device which insures, under normal operating conditions, a long and trouble-free life. A transformer consists of two or more coils of insulated wire wound on a laminated steel core. When voltage is introduced into one coil (called the primary), it magnetizes the iron core. As a result, a voltage is induced into the secondary, or output coil. The change of voltage (voltage ratio) between the primary and secondary depends on the turns ratio of the two coils.

WHAT DOES A TRANSFORMER DO?

Principle of Operation

A transformer operates on the principle of magnetic induction. Each transformer consists of two or more coils of insulated conductor (wire) wound on a laminated steel core. When a voltage is supplied to the PRIMARY (input) coil, it magnetizes the steel core, which in turn induces a voltage on the SECONDARY (output) coil. The voltage induced from the primary to the secondary coils is directly proportional to the turns ratio between the two coils. **(FIG 1)**

For example, if a transformer’s input, or primary leg has twice as many turns of wire as the secondary, then the ratio would be 2:1. Therefore, if you applied 480 volts to the primary, 240 volts would be induced in the secondary. This is an example of a two winding “step-down” transformer. (**FIG 2)**. If the voltage is to be “stepped-up” or increased, the same transformer could be turned around and connected so that the input side would have the 240 volts and the output would be 480 volts. (**FIG 3)**

Standard transformers rated at 3 kVA and larger can be used for either step-up or step-down service. Transformers rated 2 kVA and below have compensated windings and should not be used in reverse feed applications. (Note: some system design considerations apply.)

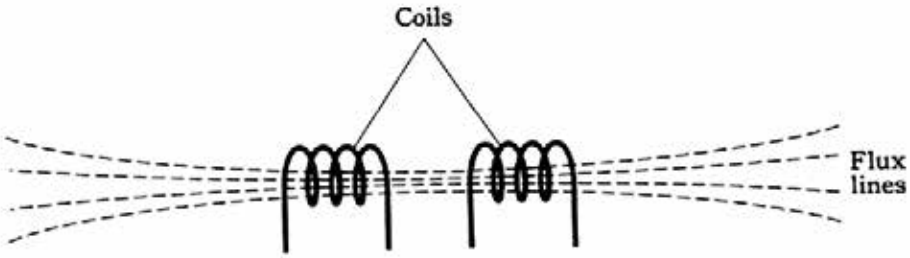

FIG (1)

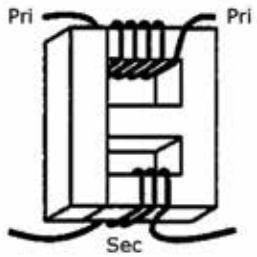

FIG (2)

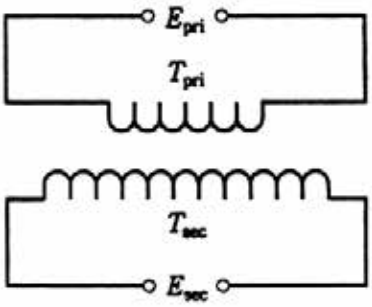

FIG (3)

© Hammond Power Solutions Inc.

Data subject to change without notice.

TYPES OF TRANSFORMERS

Dry-type transformers are manufactured in a variety of ways to meet the requirements of different applications. The following is a list of transformer types found in this catalog with a brief explanation.

Industrial Control and General Purpose Enclosed Transformers - (see Section 1)

A control transformer is an isolation transformer designed to provide a high degree of secondary voltage stability (regulation) during a brief period of overload condition (also referred to as “Inrush Current”). Control transformers are usually rated for 600 volts or less.

Buck-Boost Transformers - (see Section 2)

Buck-Boost transformers are control transformers with low voltage secondary windings. By field connecting the primary and secondary windings in an autotransformer configuration, they offer an economical solution to the adjustment of line voltages that are slightly above or below normal.

Buck-Boost transformers can be used to adjust **stable voltages only**. Fluctuating line voltages should be regulated with a Hammond Voltage Conditioner.

Reactors - (see Section 3)

Air Core:

They are used primarily as current or voltage limiting devices, particularly where large currents can enter a system that uses small amounts of power. An example is the telephone system which uses very small voltages where the current in a fault condition needs to be kept to a minimum.

Iron Core:

An iron core reactor provides the same current or voltage control on a system as its air core counterpart. Iron core units tend to be used on smaller applications where the variables need greater or more sensitive control.

Drive Isolation Transformers - (see Section 4)

Drive isolation transformers are designed to supply power to AC and DC variable speed drives. The harmonics created by SCR type drives requires careful designing to match the rated hp of each drive system. The duty cycle included is approximately one start every 2 hours. The windings are designed for an overcurrent of 150% for 60 seconds, or 200% for 30 seconds.

Motor Starting Autotransformers - (see Section 5)

Motors have a large inrush current component that requires a special design. Motor starting autotransformers are designed to withstand an inrush of upwards of 25 times normal current. Typically, they are tapped on larger sizes to soft-start the motor until it is up to full RPM.

© Hammond Power Solutions Inc.

Data subject to change without notice.

Types of Transformers continued . . .

Low Voltage General Purpose Transformers - (see Section 6)

HPS low voltage general purpose transformers provide a safe, long lasting, highly reliable power source. They are designed for general lighting and other low voltage applications. They are UL listed and CSA certified.

Energy Efficient Transformers - (see Section 7)

There is a growing movement in the electrical industry towards energy efficient products in all sectors including dry-type transformers. In addition to the benefits to the environment, energy efficient transformers also can realize substantial savings in operating costs thereby having a direct impact on the initial investment evaluated over a period of time.

The standards covering 600 volt class energy efficiency in dry-type transformers in North America are outlined in DOE 10 CFR Part 431, “Energy Conservation Program for Commercial Equipment: Distribution Transformers Energy Conservation Standards; Final Rule”. These specifications have carefully considered the total owning cost unique for industrial or commercial installations where the load factor is an integral part of the efficiency rating.

Energy Efficient General Purpose Transformers

The HPS Sentinel® energy efficient general purpose transformers are designed for linear loads and are most frequently used for applications such as commercial buildings which will supply a variety of general loads.

Energy Efficient K-Factor Transformers

The HPS Synergy® energy efficient k-factor transformers are designed to tolerate heating due to harmonics associated with non-linear loads. Harmonics can indicate their presence in a number of ways: overheating, device malfunctions, telephone interference, equipment vibration and breakers tripping.

Energy Efficient Harmonic Mitigating Transformers

The HPS Centurion® energy efficient, harmonic mitigating transformer with zero sequence flux cancellation technology is specifically designed to treat the harmonics generated by computer equipment and other non-linear, power electronic loads. Combining zero sequence flux cancellation with phase shifting treats 3rd, 5th, 7th, 9th, 15th, 17th and 19th harmonics within its secondary windings. Typical applications of severe non-linear loading conditions include data centers, internet-service providers, telecom sites, call centers, broadcast centers, etc.

© Hammond Power Solutions Inc.

Data subject to change without notice.

Types of Transformers continued . . .

Encapsulated (Potted) Transformers - (see Section 8)

HPS offers two complete lines of encapsulated transformers to meet both a commercial and industrial environment. These units are encapsulated and completely enclosed.

Encapsulated Transformers for Commercial Use

The Fortress™ is designed to provide the ideal solution for commercial applications. All units are encapsulated with electrical grade silica sand and resin compounds, which completely enclose the core and coil to seal out moisture, airborne contaminants and eliminates corrosion and deterioration.

Encapsulated Transformers for Harsh Environments and Hazardous Locations

The HPS Titan® design is especially suited for installations in harsh environments and hazardous locations which may contain dangerous gasses, liquids, dust, lint, moisture and where corrosive contaminants are present. Typical applications include: institutional, commercial, industrial, petrochemical, pulp and paper; food processing, mines, marine and shipboard installations. They are designed to meet both UL Standard 1604 entitled "*Electrical Equipment for use in Class I and Class II, Division 2 and Class III Hazardous (Classified) Locations*" and ABS Type Approval for "*Marine Duty Service and Offshore Applications - Electrical Distribution and Propulsion*".

Mini Power Centers - (see Section 9)

HPS power centers are conveniently pre-wired to save you time, money, and space. They're designed ideally for industrial locations, temporary power at construction sites, commercial buildings, test equipment, plant assembly lines, etc.

Autotransformers - (see Section 10)

Autotransformers are similar to Buck-Boost transformers in that they are also an economical means of adjusting output voltage. Autotransformers are designed to adjust the supply voltage when isolation from the line is not necessary and where local electrical codes permit. Units are designed in either a step-up or step-down application and meet motor inrush currents.

Energy Efficient Medium Voltage Distribution Transformers - (see Section 11)

As of January 1st, 2010, all dry-type medium voltage distribution transformers manufactured or imported into North America must comply with the new DOE 10 CFR Part 431/NRCan standards. These standards were put in place to reduce additional energy consumption, as well as reduce greenhouse gases.

HPS Millennium™ transformers are really 5kV class dry-type energy efficient distribution transformers. They are designed primarily for use in stepping down medium voltage power (i.e. 4160V or 2400V primary) to a lower voltage for commercial, institutional or industrial applications.

© Hammond Power Solutions Inc.

Data subject to change without notice.

CONSTRUCTION FEATURES

Standard transformers are designed and constructed to meet or exceed the requirements for general applications. These transformers are provided either ventilated or totally enclosed. To meet special applications or custom requirements, modifications are available as either factory installed options or field installed accessories.

Please note that construction details for our Control Transformers and Three Phase Line Reactors are in sections 1 and 3 respectively.

(Note: top cover removed for clarity)

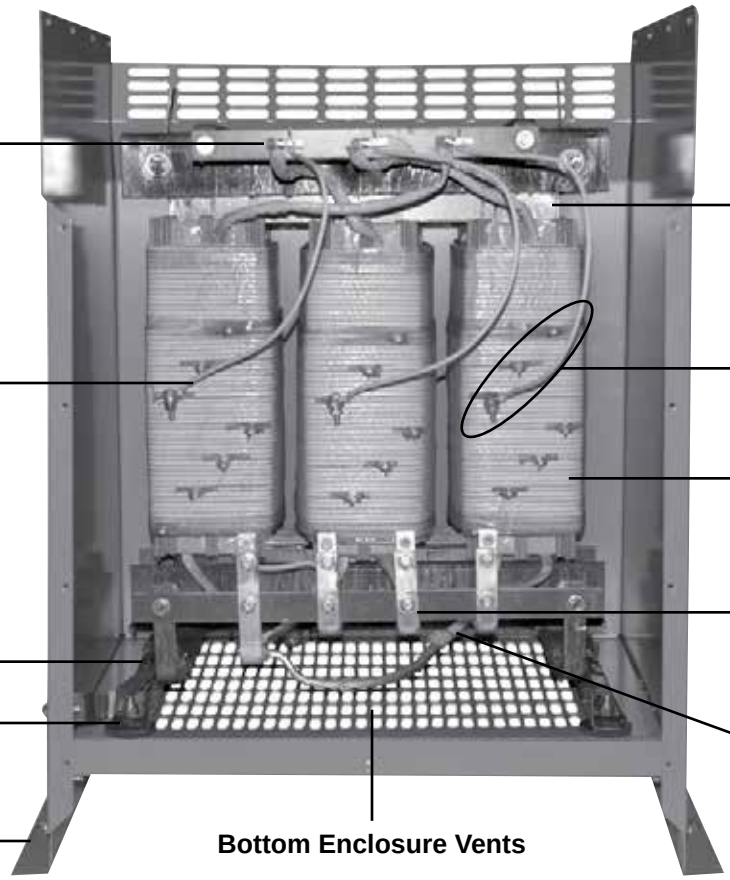

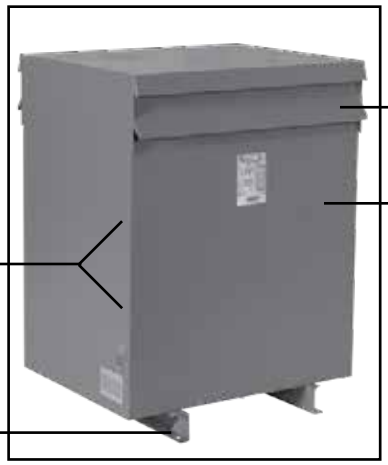

© Hammond Power Solutions Inc.

Data subject to change without notice.

CONSTRUCTION FEATURES continued . . .

Core Construction

HPS cores are manufactured from the highest quality non-aging, cold rolled, silicon steel laminations. Cores are precision cut to close tolerances to eliminate burrs and improve performance. Most feature fully interleaved stepped core construction for optimum energy efficiency.

Cores are carefully assembled and rigidly clamped and then either bolted or welded to minimize gaps and assure low losses and quiet operation.

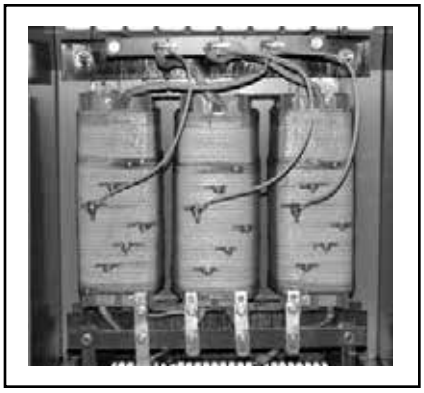

Coil Construction

Coils are available in either aluminium or copper construction. Coils are precision wound with continuous copper or aluminum conductors and are electrically balanced to minimize axial short-circuit forces.

The use of duct stick permits the flow of air thus providing excellent cooling in addition to providing superior axial mechanical strength.

Terminations

HPS transformers are provided (where applicable) with both high and low terminal connectors suitable for both copper and aluminum cables. These connectors allow for easy field installation without the need to purchase connectors separately, saving the installer both time and money. For details on types and sizes of connectors provided, please refer to the features tables located within each product section.

Insulation System

The insulation rating is the maximum allowable winding (hot spot) temperature of a transformer operating at an ambient temperature of 40°C. Insulation systems are classified by the temperature rating. The following table summarizes the different insulation systems available.

Insulation Rating	Insulation Class	Average Winding Temperature Rise	Hot Spot Temperature Rise	Maximum Winding Temperature
Class 105	A	55°C	65°C	105°C
Class 150 or 130	B	80°C	110°C	150°C
Class 180	F	115°C	145°C	180°C
Class 200	N	130°C	160°C	200°C
Class 220	H	150°C	180°C	220°C

NOTE: The maximum acceptable temperature rise based on an average ambient of 30°C during any 24 hour period and a maximum ambient of 40°C at any time.

© Hammond Power Solutions Inc.

Data subject to change without notice.

CONSTRUCTION FEATURES continued . . .

VACUUM PRESSURE IMPREGNATION (VPI)

The following briefly describes our process.

Polyester Resin Impregnation

For most applications, regardless of voltage class, HPS' polyester resin impregnation system is preferred. The polyester resin exhibits a much higher dielectric strength and bonding properties than any varnish previously used, or other encapsulations including oil modified epoxies. This polyester resin exhibits these characteristics:

- Low moisture absorption (Non-Hydroscopic)
- High dielectric strength
- High bond strength
- Excellent mechanical properties
- Stability at high temperatures
- Excellent thermal shock properties
- Longevity of life at maximum transformer temperatures
- UL approved for 220°C insulation systems for any voltage class
- Fungus-resistant reactive components makes it environmentally superior.

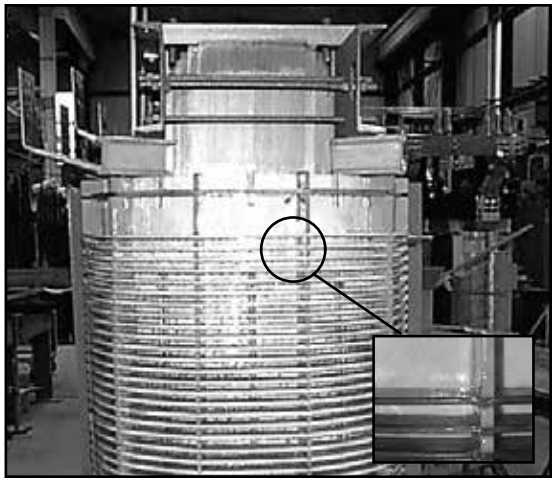

For long-term life expectancy, it is critical that transformers maintain the integrity of the dielectric properties of the insulation materials.

At HPS, transformer coils are impregnated with a complete vacuum-pressure impregnating cycle:

- Coils are placed in a sealed tank and a vacuum is drawn.
- The resin is then introduced into the chamber and the assembly is completely immersed.

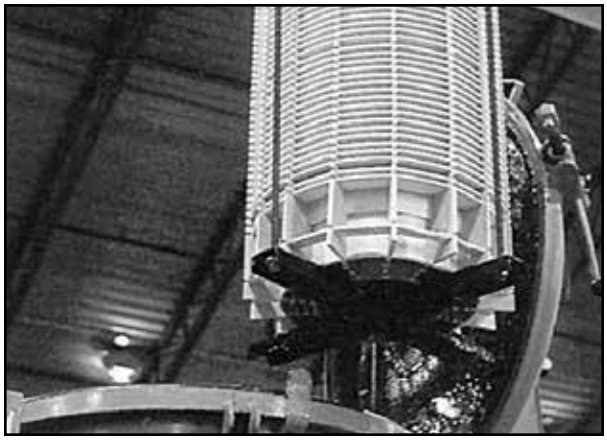

© Hammond Power Solutions Inc.

Data subject to change without notice.

CONSTRUCTION FEATURES continued . . .

Vacuum Pressure Impregnation continued . . .

- The tank is then pressurized to force the impregnation material to thoroughly penetrate the windings.
- The coils or assembly are then removed from the chamber and oven cured.
- These steps are then repeated.

Vacuum Pressure Chamber

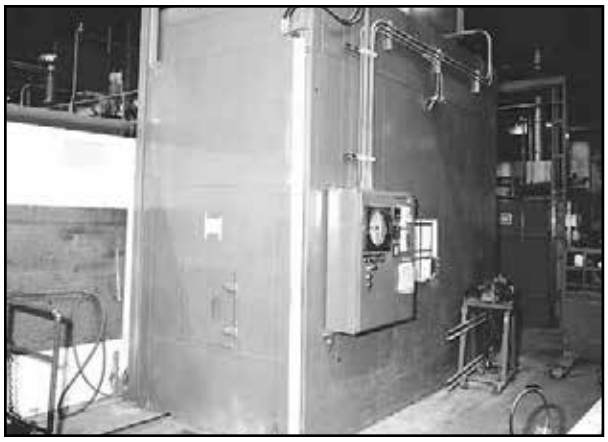

Baking Oven

The result is transformers whose coils exhibit virtually corona-free performance, a superior resistance to environmental conditions and a new standard of reliability even for the worst industrial, utility or commercial applications.

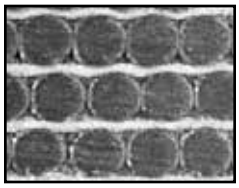

© Hammond Power Solutions Inc.

Data subject to change without notice.

TRANSFORMER BASICS

Banking of Transformers

Two or three single phase transformers can be connected to make a three phase bank. The primary windings of the single phase transformers can be connected in delta or wye. The secondary windings can also be connected in either a delta or wye configuration. The equivalent capacity of the bank will be equal to three times the nameplate rating of each single phase transformer. Usually this type of installation is more expensive than using a single three phase transformer.

Primary Voltage Taps

In some cases, the actual supply voltage to the primary of the transformer is either slightly higher or lower than the nameplate rating. Taps are provided on most transformers on the primary winding to correct this condition and maintain full rated output voltage and capacity. Standard taps are usually in 2 1/2% or 5% increments. Example: The transformer has a 480V primary rating and the incoming voltage is at 504V. The primary connection should be made at the +5% tap in order to maintain the nominal secondary voltage.

Transformer Operation at 50 Hz

Transformers rated at 60Hz should not be used on a 50Hz supply due to higher losses and core saturation and the resultant higher temperature rise. Transformers rated for 50Hz, however, can be operated on a 60Hz supply.

© Hammond Power Solutions Inc.

Data subject to change without notice.

Transformer Basics continued . . .

Reverse Connection

In general, distribution transformers can be reverse connected without derating the nameplate kVA capacity. However, some precautions need to be taken for reverse connection of some smaller transformers. On HPS transformers under 6 kVA three phase and 3 kVA single phase, there is a “turns ratio compensation” on the low voltage winding. When the input voltage, equal to the nameplate rated voltage, is connected to the low voltage winding, the output voltage will be slightly lower than the nameplate rating.

When a three phase transformer is reverse connected thus resulting in a Wye-Delta configuration, the neutral terminal must be isolated.

Further, the reverse connected transformer may draw a higher inrush current during energization. Hence the sizing of the line fusing or circuit breaker may be affected.

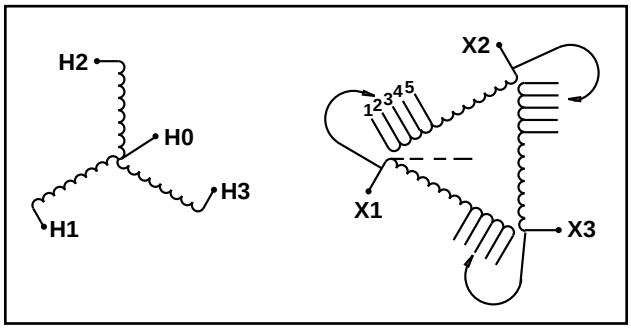

Balance Loading on Single and Three Phase Transformers

A single phase transformer with 120/240V secondary has two separate 120V secondary windings and is usually connected into a 3 wire system. Care must be exercised in distributing the load on the two 120V windings evenly, so each winding is carrying about half of the total load.

Similarly for a three phase transformer, each phase should be considered as a single phase transformer. When distributing single phase loads between the three phases, each of the three windings should be evenly loaded.

Sound Level

Sound needs to be considered when transformers are located in close proximity to occupied areas. All energized transformers emanate sound due to the alternating flux in the core. This normal sound emitted by the transformer can be a source of annoyance unless it is kept below acceptable levels. There are ways of minimizing sound emission as discussed in the HPS “Field Service Guide” (TIB04).

HPS transformers are built to meet the latest ANSI, CSA and UL standards. These standards use NEMA-ST20 (see below table for outline).

Equivalent Two Winding kVA	Self Cooled Ventilated Voltage Line to Line 1.2kV dB-A	> 1.2kV dB-A	Self Cooled Non-Ventilated dB-A
0-9	40	45	45
10-50	45	50	50
51-150	50	55	55
151-300	55	58	57
301-500	60	60	59
501-700	62	62	61
701-1000	64	64	63

HPS also offers “Low Sound” options to most of it distribution style transformers. Please contact your HPS sales representative for details.

© Hammond Power Solutions Inc.

Data subject to change without notice.

SELECTING TRANSFORMERS

SINGLE PHASE

A single phase transformer is designed to transform single phase or three phase input (source) voltage to the single phase output (load) voltage required by your equipment. To select the correct single phase transformer you must first determine:

1) The equipment being installed operates on a **single phase** supply (see your equipment nameplate or installation manual).
2) The **Primary Voltage** of the transformer. This is the same as the line input (or source) voltage, typically 480 or 600 volts AC.
3) The **Secondary Voltage** of the transformer. The equipment being installed will have a specified supply voltage (see equipment nameplate or installation manual). The transformer you select must have a secondary voltage equal to the required supply voltage of the equipment, typically 120/240 VAC.
4) The **Frequency** in Hertz (cycles-per-second) of the input (source) voltage must be the same as the operating frequency of the equipment being supplied. The transformer selected must operate at the same frequency. Typical operating frequency is 60 Hz.
5) The **Total VA** of the load is determined by the product of the voltage supplied across the load and the current passing through it. This is normally expressed in VA (Volt-Amperes) or kVA (kilo Volt-Amperes) on the equipment nameplate. The total load is often a combination of various loads (i.e. lights, heaters, motors). You must calculate these individual loads and add them together to obtain the total load of the transformer. The transformer you select must have a kVA rating equal to or greater than the load on the transformer.

How to use the full load chart to find kVA:

A) Determine the secondary voltage of your transformer.
B) Sum up the total amperes required by the load.
C) From the full load current table below, select a transformer under the corresponding secondary voltage, with a standard kVA capacity and amperage equal to or higher than the sum required by the load.

Calculating kVA: To calculate kVA when volts and amperes are known:

$$kVA = \frac{\text{Volts X Amps (load)}}{1000}$$

Full Load Current Table Single Phase Transformer

kVA	Current in Amperes						
	120V	240V	416V	480V	600V	2400V	4160V
0.25	2.08	1.04	0.60	0.52	0.41	-	-
0.50	4.16	2.08	1.20	1.04	0.83	-	-
0.75	6.25	3.13	1.80	1.56	1.25	-	-
1.0	8.33	4.17	2.40	2.08	1.67	-	-
1.5	12.5	6.25	3.60	3.13	2.50	-	-
2.0	16.7	8.33	4.81	4.17	3.33	-	-
3.0	25.0	12.5	7.21	6.25	5.00	1.25	0.72
5.0	41.6	20.8	12.0	10.4	8.33	2.08	1.20
7.5	62.5	31.2	18.0	15.6	12.5	3.12	1.80
10	83.3	41.6	24.0	20.8	16.6	4.16	2.40
15	125	62.5	36.0	31.2	25.0	6.25	3.60
25	208	104	60.0	52.0	41.6	10.4	6.00
37.5	312	156	90.1	78.1	62.5	15.6	9.01
50	416	208	120	104	83.3	20.8	12.0
75	625	312	180	156	125	31.2	18.0
100	833	416	240	208	166	41.6	24.0
150	1250	625	360	312	250	62.5	36.0
167	1391	695	401	347	278	69.5	40.1
250	2083	1041	600	520	416	104	60.0
333	2775	1387	800	693	555	138	80.0

Single Phase AC Motor Full Load Running Currents in Amperes and Recommended Transformer Ratings

Horsepower	Full Load Current (Amps)			Minimum Transformer KVA
	110-120V	208V	220-240V+	
.50 HP	9.8	5.4	4.9	1.5
.75 HP	13.8	7.6	6.9	2.0
1 HP	16.0	8.8	8.0	3.0
1.5 HP	20.0	11.0	10.0	3.0
2 HP	24.0	13.2	12.0	5.0
3 HP	34.0	18.7	17.0	5.0
5 HP	56.0	30.8	28.0	7.5
7.5 HP	80.0	44.0	40.0	15.0
10 HP	100	55.0	50.0	15.0
15 HP	135	74.8	68.0	25.0
20 HP	-	-	88.0	25.0
25 HP	-	-	110	37.5
30 HP	-	-	136	37.5
40 HP	-	-	176	50.0
50 HP	-	-	216	75.0

kVA ratings include 10% overcapacity for frequent motor starts.
+ For 200 volt motors increase 220-240V ratings by 15%.

© Hammond Power Solutions Inc.

Data subject to change without notice.

Selecting Transformers continued . . .

THREE PHASE

A three phase transformer is designed to transform a three phase input (source) voltage to the single phase and three phase output (load) voltages required by your equipment.

In order to select the correct three phase transformer you must first determine:

1) The equipment being installed operates on a **three phase** supply. Note: If both single phase and three phase equipment makes up the load, the single phase equipment is connected to only one phase of the transformer.
2) The **Primary Voltage** of the transformer. This is the same as the line input (or source) voltage, typically 480 or 600 volts AC.
3) The **Secondary Voltage** of the transformer. This is the transformer's output voltage and must be the same as the voltage required by the equipment being installed (see equipment nameplate, typically 208Y/120 volts).
4) The **Frequency** in hertz (cycles per second) of the input (source) voltage must be the same as the operating frequency of the equipment being supplied. The transformer selected must operate at the same frequency. Typical operating frequency is 60 Hz.
5) The **Total VA** of the load is determined by the product of the voltage supplied across the load and the current passing through it. This is normally expressed in VA (Volt-Amperes) or kVA (kilo Volt-Amperes) on the equipment nameplate.

The total load is often a combination of various loads (i.e. lights, heaters, motors). You must calculate these individual loads and add them together to obtain the total load of the transformer.

The transformer you select must have a kVA rating equal to or greater than the load requirement. Note: The three phase transformer must be selected so that any one phase is not overloaded. If you are connecting a single phase load to one phase of the three phase transformer, you must calculate the load as if it were loading all three phases.

Calculating kVA

To calculate kVA when volts and amperes are known:

$$kVA = \sqrt{3} \times \frac{V_{LL} \times I_L}{1000}$$

V_{LL} = Volts line - line
I_L = Line Current

Full Load Current Table - Three Phase Transformer

kVA	Current in Amperes							
	208V	240V	380V	416V	480V	600V	2400V	4160V
2	5.55	4.81	3.03	2.77	2.40	1.92	0.48	0.27
3	8.32	7.21	4.55	4.16	3.60	2.88	0.72	0.41
6	16.6	14.4	9.11	8.32	7.21	5.77	1.44	0.83
9	24.9	21.6	13.6	12.4	10.8	8.66	2.16	1.24
15	41.6	36.0	22.7	20.8	18.0	14.4	3.60	2.08
30	83.2	72.1	45.5	41.6	36.0	28.8	7.21	4.16
45	124	108	68.3	62.4	54.1	43.3	10.8	6.24
75	208	180	113	104	90.2	72.1	18.0	10.4
112.5	312	270	170	156	135	108	27.0	15.6
150	416	360	227	208	180	144	36.0	20.8
225	624	541	341	312	270	216	54.1	31.2
300	832	721	455	416	360	288	72.1	41.6
450	1249	1082	683	624	541	433	108	62.4
500	1387	1202	759	693	601	481	120	69.3
600	1665	1443	911	832	721	577	144	83.2
750	2081	1804	1139	1040	902	721	180	104

Three Phase AC Motor Full Load Running Currents in Amperes and Recommended Transformer Ratings

Horsepower	Full Load Current (Amps)Minimum					Transformer kVA
	110-120V	208V	220-240V+	440-480V	550-600V	
.50 HP	4.0	2.2	2.0	1.0	0.8	**3**
.75HP	5.6	3.1	2.8	1.4	1.1	**3**
1 HP	7.2	4.0	3.6	1.8	1.4	**3**
1.5 HP	10.4	5.7	5.2	2.6	2.1	**3**
2 HP	13.6	7.5	6.8	3.4	2.7	**6**
3 HP	19.2	10.7	9.6	4.8	3.9	**6**
5 HP	30.4	16.7	15.2	7.6	6.1	**9**
7.5 HP	44.0	24.0	22.0	11.0	9.0	**15**
10 HP	56.0	31.0	28.0	14.0	11.0	**15**
15 HP	84.0	46.0	42.0	21.0	17.0	**30**
20 HP	108	59.0	54.0	27.0	22.0	**30**
25 HP	136	75.0	68.0	34.0	27.0	**45**
30 HP	160	88.0	80.0	40.0	32.0	**45**
40 HP	208	114	104	52.0	41.0	**75**
50 HP	260	143	130	65.0	52.0	**75**
60 HP	-	170	154	77.0	62.0	**75**
75 HP	-	211	192	96.0	77.0	**112.5**
100 HP	-	273	248	124	99.0	**150**

kVA ratings include 10% overcapacity for frequent motor starts.
+ For 200 volt motors increase 220-240V ratings by 15%.

© Hammond Power Solutions Inc.

Data subject to change without notice.

Compliance with Engineering Standards

HPS Dry-Type Transformers are approved, listed, recognized or comply with the following Regulatory Standards. The reference files are:

UL1561 and UL1562	CSA C9-M and CSA C22.2-M	
ANSI C57.12.51	NEMA TR-1 and ST-1	IEC 76

HPS dry-type transformers can be built to comply with the following engineering standards:

- ➔ **UL 1561 :** Dry-Type General Purpose and Power Transformers
- ➔ **UL 1562 :** Transformers, Distribution, Dry-Type over 600 volts
- ➔ **IEEE-C57.12.01 :** General Requirements for Dry-Type Distribution and Power Transformers
- ➔ **NEMA ST-20 :** Dry-Type Transformers for General Applications
- ➔ **ANSI-C57.12.51 :** Requirements for Ventilated Dry-Type
- ➔ **ANSI-C57.12.70 :** Terminal Markings & Connections for Distribution & Power Transformers
- ➔ **ANSI-C57.12.91 :** Test Code for Dry-Type Distribution and Power Transformers
- ➔ **ANSI-C57.12.90 :** Guide for Short Circuit Testing of Distribution and Power Transformers
- ➔ **NEMA 250 :** Enclosures for Electrical Equipment
- ➔ **CSA-C22.2 No. 47 :** Air-Cooled (Dry-Type) Transformers
- ➔ **CSA-C9-M :** Dry-Type Transformers
- ➔ **CSA C802.2 and DOE 10 CFR Part 431:** Energy Efficiency Standards

© Hammond Power Solutions Inc.

Data subject to change without notice.

TRANSFORMER TEST STANDARDS

All transformers are fully tested at HPS prior to shipment. Transformers must meet a very exacting criteria to be certified acceptable for release. Tests are categorized as either 'Production Tests' or 'Type Tests'. Production Tests are performed on every HPS transformer.

Production Tests

D.C. Resistance Measurement

Current from a D.C. resistance bridge is applied to the transformers windings to determine the D.C. resistance voltage of the coils. This test is important for the calculation of I^2R for use in the winding temperature test and as base data for future assessment in the field.

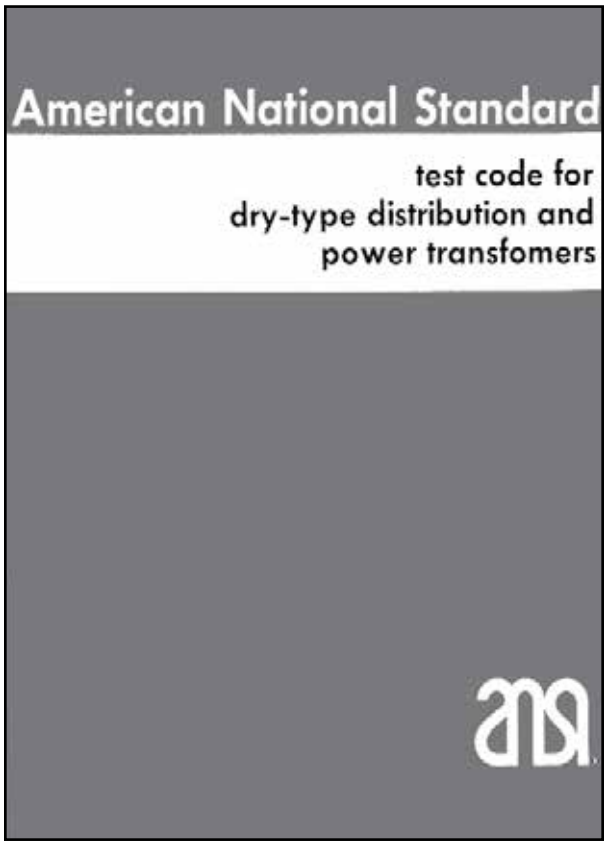

Voltage Ratio (turns ratio)

To confirm the voltage ratio of a transformer, the ratio of the number of turns in the high-voltage winding with respect to the number of turns in the low-voltage winding is measured .

Polarity and Phase-Relation Test

Polarity and phase-relation tests are made to determine angular displacement and relative phase sequence to facilitate connections in a transformer. Determining polarity is also essential when paralleling or banking two or more transformers.

No-Load and Excitation Current Test*

No-load losses (excitation losses) are the core losses of a transformer that are "excited" at rated voltage and frequency, but which do not supply load. No-load losses include core loss, dielectric loss and losses in the windings due to exciting current.

The transformer is excited at rated voltage with all other windings open circuited. The exciting current and no load loss is then measured.

*(Note: This is a standard test only on units over 500kVA. It will only be carried out on lower kVA units when specifically requested.)

© Hammond Power Solutions Inc.

Data subject to change without notice.

Transformer Test Standards continued ...

Impedance Voltage and Load Loss Test*

The voltage required to circulate the rated current under short-circuit conditions when connected on the rated voltage tap is the impedance voltage.

Rated current is circulated through the windings with the secondary short circuited. The impedance voltage and load loss is then measured. They are corrected to rise +20°C reference temperature.

*(Note: This is a standard test only on units over 500kVA. It will only be carried out on lower kVA units when specifically requested.)

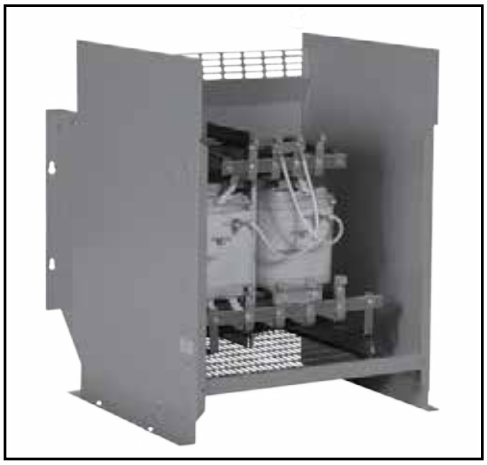

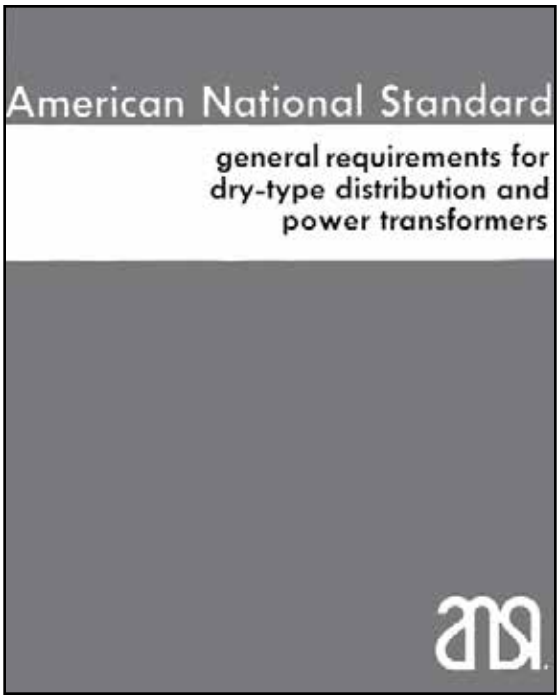

Dielectric Tests

The purpose of dielectric tests is to demonstrate that the transformer has been designed and constructed to withstand the voltages associated with specified insulation levels.

Applied Voltage Test

A normal power frequency, such as 60 Hz, is applied to each winding for one minute. These tests are in accordance with table (3) in ANSI C57-12-01.

Induced Voltage Test

The induced voltage test is applied for 7200 cycles or 60 seconds, whichever is shorter. The voltage applied is twice the operating voltage and confirms the integrity of the insulation.

Type Tests

Type tests are required either to qualify a new product or to further certify a standard product line. The following is a list of type tests performed on HPS Transformers.

- **Temperature Rise Test**
- **Sound Level Test**
- **Partial Discharge (corona)**
- **Basic Impulse Insulation Level (BIL)**
- **Short-Circuit Test**

© Hammond Power Solutions Inc.

Data subject to change without notice.

QUALITY MANAGEMENT SYSTEMS

ISO 9001:2008

Hammond Power Solutions facilities, located in Guelph Ontario Canada, Walkerton Ontario Canada, Baraboo Wisconsin USA, Compton California USA and Monterrey Mexico, (which manufacture the transformers featured in this catalog), have implemented Quality Management Systems based on ISO 9001. ISO 9001 includes all processes affecting quality, customer satisfaction and continual improvement. Our customers can be assured of the integrity and quality in all Hammond Power Solutions transformer products.

© Hammond Power Solutions Inc.
Data subject to change without notice.

HPS STANDARD ENCLOSURES

An enclosure is a surrounding case constructed to provide a degree of protection to personnel against access to hazardous parts and to provide a degree of protection to the enclosed equipment against specified environmental conditions.

Applicable Engineering Standards

HPS Enclosures are designed in accordance with the following standards:

- CSA 22.2 No. 47 (General Purpose)
- CSA 22.2 No. 94 (Specialty Enclosures)
- NEMA 250
- UL 50 and UL 50E

Please ensure to reference all local and national electrical codes and applicable transformer standards before selecting an enclosure for your application.

Definitions

Degree of protection:	The extent of protection provided by an enclosure against access to hazardous parts, against ingress of foreign solid objects and/or against ingress of water and verified by approved standardized test methods.
Hazardous parts:	A part that is hazardous to approach or to touch.
Indoor Locations:	Areas which are protected from exposure to the weather.
Non-ventilated:	Constructed so as to provide no intentional circulation of external air through the enclosure.
Outdoor locations:	Locations that are exposed to the weather.
Ventilated:	Constructed so as to provide for the circulation of external air through the enclosure to remove excess heat, fumes or vapors.

Enclosure Selection

The selection of the appropriate enclosure is vital for the long term reliability of your HPS product. The “degree of protection” an enclosure actually provides can only be determined by referencing the appropriate test methods outlined in the above mentioned standards.

The list below is just some of the typical enclosure types available for HPS products, their applications, and the environmental conditions they are designed to meet.

HPS Typical Enclosures Types

The following lists <u>some</u> of the standard HPS enclosures available and a brief description of their applications:

TYPE 1

This is a general purpose ventilated enclosure constructed for indoor use only to provide a degree of protection to personnel against access to hazardous parts; to provide a degree of protection of the equipment inside the enclosure against ingress of solid foreign objects (falling dirt).

TYPE 2

This is a general purpose ventilated enclosure constructed for indoor use only to provide a degree of protection to personnel against access to hazardous parts; to provide a degree of protection of the equipment inside the enclosure against the ingress of solid foreign objects (falling dirt); and to provide a degree of protection with respect to harmful effects on the equipment due to the ingress of water (dripping or light splashing).

TYPE 3RI

This is a general purpose ventilated enclosure constructed for indoor use only to provide a degree of protection to personnel against access to hazardous parts; to provide a degree of protection of the equipment inside the enclosure against the ingress of solid foreign objects (falling dirt); and to provide a degree of protection with respect to harmful effects on the equipment due to the ingress of water (sprinkler head spray, light splashing of liquids).

TYPE 3R

This is a general purpose ventilated enclosure constructed for either indoor or outdoor use to provide a degree of protection to personnel against access to hazardous parts; to provide a degree of protection of the equipment inside the enclosure against the ingress of solid foreign objects (falling dirt); and to provide a degree of

© Hammond Power Solutions Inc.

Data subject to change without notice.

HPS Standard Enclosures continued ...

protection with respect to harmful effects on the equipment due to the ingress of water (rain, sleet, snow); and that will be undamaged by the external formation of ice on the enclosure.

TYPE 3RE

This is a general purpose ventilated enclosure constructed for either indoor or outdoor use to provide a degree of protection to personnel against access to hazardous parts; to provide a degree of protection of the equipment inside the enclosure against the ingress of solid foreign objects (falling dirt and circulating dust); and to provide a degree of protection with respect to harmful effects on the equipment due to the ingress of water (rain, sleet, circulating snow); and that will be undamaged by the external formation of ice on the enclosure.

TYPE 4

This is a general purpose non-ventilated enclosure constructed for either indoor or outdoor use to provide a degree of protection to personnel against access to hazardous parts; to provide a degree of protection of the equipment inside the enclosure against the ingress of solid foreign objects (falling dirt and windblown dust); and to provide a degree of protection with respect to harmful effects on the equipment due to the ingress of water (rain, sleet, snow, splashing water, and hose directed water); and that will be undamaged by the external formation of ice on the enclosure. (Note: not submersible)

TYPE 4X

This is a general purpose non-ventilated enclosure constructed for either indoor or outdoor use to provide a degree of protection to personnel against access to hazardous parts; to provide a degree of protection of the equipment inside the enclosure against the ingress of solid foreign objects (windblown dust); and to provide a degree of protection with respect to harmful effects on the equipment due to the ingress of water (rain, sleet, snow, splashing water, and hose directed water); that provides an additional level of protection against corrosion; and that will be undamaged by the external formation of ice on the enclosure. (Note: not submersible)

TYPE 12

This is a general purpose non-ventilated enclosure constructed (without knockouts) for indoor use only to provide a degree of protection to personnel against access to hazardous parts; to provide a degree of protection of the equipment inside the enclosure against the ingress of solid foreign objects (falling dirt and circulating dust, lint, fibers, and filings); and to provide a degree of protection with respect to harmful effects on the equipment due to the ingress of water (dripping and light splashing). (Note: not submersible)

CONVERSION OF NEMA ENCLOSURE TYPE RATINGS TO IEC 60529 ENCLOSURE CLASSIFICATION DESIGNATIONS (IP)

(Cannot be Used to Convert IEC Classification Designations to NEMA Type Ratings)

IP 1st Character	NEMA Enclosure Type																		IP 2nd Character
	1		2		3, 3X, 3S,3SX		3R, 3RX		4, 4X		5		6		6P		12, 12K, 13		
IP0_		■		■		■		■		■		■		■		■		■	IP_0
IP1_				■		■		■		■		■		■		■		■	IP_1
IP2_				■		■		■		■		■		■		■		■	IP_2
IP3_						■		■		■		■		■		■		■	IP_3
IP4_						■		■		■				■		■		■	IP_4
IP5_						■				■				■		■			IP_5
IP6_										■				■		■			IP_6
														■		■			IP_7
																■			IP_8
	A	B	A	B	A	B	A	B	A	B	A	B	A	B	A	B	A	B	

IP First Character = The A shaded block in the "A" column represents the first IP character. This indicates that the NEMA Enclosure Type exceeds the requirements for the respective IEC 60529 IP First Character Designation. This IP First Character Designation is the protection against access to hazardous parts and solid foreign objects.

IP Second Character = The B shaded block in the "B" column represents the second IP character. This indicates that the NEMA Enclosure Type exceeds the requirements for the respective IEC 60529 IP Second Character Designation. This IP Second Character Designation is the protection against the ingress of water.

Example: NEMA Type 3R = IP24

***Note**: Please refer to NEMA standards publication 250-2003 for exact details of the above table.*

© Hammond Power Solutions Inc.

Data subject to change without notice.

HAMMOND POWER SOLUTIONS INC. EXCLUSIVE LIMITED WARRANTY

Exclusive Warranty

Hammond Power Solutions Inc. (“HPS”), warrants to the original purchaser of the standard transformers listed in this catalog (the “Goods”), will be free from defects in materials and workmanship for a period commencing on the date of manufacture of the Goods and expiring at the end of the period specified below (the “Warranty Period”). THIS WARRANTY IS EXCLUSIVE AND IS IN LIEU OF ANY OTHER WARRANTY EXPRESS OR IMPLIED, INCLUDING BUT NOT LIMITED TO ANY IMPLIED WARRANTY OR MERCHANTABILITY OR FITNESS FOR A PARTICULAR PURPOSE.

Warranty Exclusions - Limitation of Damages and Claims Procedure

The above stated warranty does not cover: workmanship of installation; dissatisfaction or damage due to improper installation, vandalism, misuse, accident, excessive wear and tear, unauthorized repair, abnormal use, lack of maintenance, or other cause(s) not within HPS’s control and HPS WILL NOT BE LIABLE, UNDER ANY CIRCUMSTANCES, FOR CONSEQUENTIAL OR INCIDENTAL DAMAGES, INCLUDING BUT NOT LIMITED TO LABOR COSTS OR LOST PROFITS RESULTING FROM THE USE OF OR INABILITY TO USE THE GOODS OR FROM THE GOODS BEING INCORPORATED IN OR BECOMING A COMPONENT OR ANY OTHER PRODUCT. Without limiting the generality of the foregoing, HPS will not be responsible for labor costs involved in the removal of Goods or the installation of replacement Goods.

HPS’s liability and the Buyer’s exclusive remedy hereunder will be limited to repair or replacement of those Goods found in HPS’s reasonable judgment to be defective. HPS reserves the right to accept or reject any claim in whole or in part. HPS will not accept the return of any Goods without its prior written approval. Please consult HPS for instructions on the Return Authorization procedure.

Product Warranty Periods:

Industrial Control Transformers (Section 1)	
HPS Imperator®	**Lifetime Warranty**
HPS Spartan®	**15 Years**
Other Control	**10 Years**
HPS Fusion™ General Purpose Enclosed Transformers (Section 1)	**15 Years**
HPS Universal™ Buck-Boost/Low Voltage Lighting Transformers (Sections 2 & 6)	**10 Years**
Line Reactors and DV/DT Filters (Section 3)	**10 Years**
HPS Tribune™ and Standard Drive Isolation Transformers (Section 4)	**10 Years**
Motor Starting Auto Transformers (Section 5)	**1 Year**
Energy Efficient Distribution Transformers (Section 7)	**10 Years**
Encapsulated Dry-Type Distribution Transformers (Section 8)	**10 Years**
HPS PowerPlus™ Mini Power Center (Section 9)	
Transformer only	**15 Year**
Mini Power Center	**1 Year**
Autotransformers (Section 10)	**10 Years**
HPS Millennium Medium Voltage Distribution Transformers (Section 11)	**1 Year**
All HPS six digit Special and Custom Transformers	**1 Year**

© Hammond Power Solutions Inc.

Data subject to change without notice.

SECTION 1

INDUSTRIAL CONTROL AND GENERAL PURPOSE ENCLOSED TRANSFORMERS

HPS Imperator®, HPS Spartan®, HPS Fusion™ and Q Series Transformers

Control Transformer Quick Selection Charts 30
What Is A Control Transformer? 31
Overcurrent Protection 32

HPS Imperator Machine Tool Industrial Control Transformers
Features and Benefits 36
Selection Tables 38
Optional Accessories 45
Wiring Schematics 64

HPS Spartan Industrial Open-Style Core & Coil Control Transformers
Features and Benefits 47
Selection Tables 48
Optional Accessories 53
Wiring Schematics 75

HPS Fusion General Purpose Enclosed Transformers
Features and Benefits 55
Selection Tables 56
Optional Accessories 61
Wiring Schematics 75

Q Series Enclosed Potted Control Transformers
Features and Benefits 62
Selection Table 63
Wiring Schematics 277

TRANSFORMER QUICK SELECTION CHARTS

HPS Imperator®

Pri. Volts	Sec. Volts	Group	Part No.	Page
600, 575, 550	120 x 240, 115 x 230, 110 x 220	A	**PH***AJ**	38
600, 575, 550	12 x 24, 11.5 x 23, 11 x 22	B	**PH***AR**	38
240 x 480, 230 x 460, 220 x 440	120 x 240, 115 x 230, 110 x 220	C	**PH***MQMJ**	39
240 x 480, 230 x 460, 220 x 440	12 x 24, 11.5 x 23, 11 x 22	D	**PH***QR**	39
208 x 416, 200 x 400, 190 x 380	120 x 240, 115 x 230, 110 x 220	E	**PH***SP**	40
120 x 240, 115 x 230, 110 x 220	120 x 240, 115 x 230, 110 x 220	F	**PH***PP**	40
120 x 240, 115 x 230, 110 x 220	12 x 24, 11.5 x 23, 11 x 22	G	**PH***PG**	41
600/480/240, 575/460/230, 550/440/220	120/100, 115/95, 110/90	H	**PH***MBMH**	41
480/240, 460/230/208, 440/220/200	120/25, 115/24, 110/23	I	**PH***MLI**	42
415/400/380	110 x 220	J	**PH***MEMX**	42
380/277/208	120 x 240	K	**PH***MGJ**	43

HPS Spartan®

Pri. Volts	Sec. Volts	Group	Part No.	Page
600/480, 575/460, 550/440	120 x 240, 115 x 230, 110 x 220	A	**SP***ACP**	48
600, 575, 550	12 x 24, 11.5 x 23, 11 x 22	B	**SP***AR**	48
240 x 480, 230 x 460, 220 x 440	120 x 240, 115 x 230, 110 x 220	C	**SP***MQMJ**	49
240 x 480, 230 x 460, 220 x 440	12 x 24, 11.5 x 23, 11 x 22	D	**SP***QR**	49
347/380	120 x 240	E	**SP***KHP**	50
347/380	12 x 24	F	**SP***KHR**	50
277	120	G	**SP***NJ**	51
120 x 240, 115 x 230, 110 x 220	12 x 24, 11.5 x 23, 11 x 22	H	**SP***PR**	51
208 x 416, 200 x 400, 190 x 380	120 x 240, 115 x 230, 110 x 220	I	**SP***SP**	52
208 x 416, 200 x 400, 190 x 380	12 x 24, 11.5 x 23, 11 x 22	J	**SP***SR**	52

HPS Fusion™

Pri. Volts	Sec. Volts	Group	Part No.	Page
600/480, 575/460, 550/440	120 x 240, 115 x 230, 110 x 220	A	**FS***ACP**	56
600, 575, 550	12 x 24, 11.5 x 23, 11 x 22	B	**FS***AR**	56
240 x 480, 230 x 460, 220 x 440	120 x 240, 115 x 230, 110 x 220	C	**FS***MQMJ**	57
240 x 480, 230 x 460, 220 x 440	12 x 24, 11.5 x 23, 11 x 22	D	**FS***QR**	57
347/380	120 x 240	E	**FS***KHP**	58
347/380	12 x 24	F	**FS***KHR**	58
277	120	G	**FS***NJ**	59
120 x 240, 115 x 230, 110 x 220	12 x 24, 11.5 x 23, 11 x 22	H	**FS***PR**	59
208 x 416, 200 x 400, 190 x 380	120 x 240, 115 x 230, 110 x 220	I	**FS***SP**	60
208 x 416, 200 x 400, 190 x 380	12 x 24, 11.5 x 23, 11 x 22	J	**FS***SR**	60

Q Series

Pri. Volts	Sec. Volts	Part No.	Page
600	12/24	**Q***PRC***	63

© Hammond Power Solutions Inc.

Data subject to change without notice.

WHAT IS A CONTROL TRANSFORMER?

What is a Control Transformer?

A control transformer is an isolation transformer designed to provide a high degree of secondary voltage stability (regulation) during a brief period of overload condition (also referred to as *"inrush current"*). Control transformers are also known as *Machine Tool Transformers, Industrial Control Transformers or Control Power Transformers*.

When you calculate the VA requirement of a Transformer, do you use the Primary or the Secondary Voltage?

When selecting the VA requirement, you use the Secondary Voltage.

Can you use a Control Transformer connected in reverse?

Yes, a control transformer can be connected in reverse. However, keep in mind the output voltage will be less than its rating, due to the compensation factor of the windings.

Can a Control Transformer regulate the output voltage?

A control transformer will not regulate the voltage. Output voltage is a function of the coil's turn ratio only, times the input voltage.

What is the benefit of "Vacuum Impregnation" on a Transformer?

All HPS Control Transformers are vacuum impregnated with "VT Polyester Resin" and oven cured which seals the surface and eliminates moisture. Impregnating the entire unit provides a strong mechanical bond and offers protection from environmental conditions.

Explain the "VA" or "Volt Ampere Output" Rating?

The VA or volt ampere output rating designates the output which a transformer can deliver for a specified time at its rated secondary voltage and rated frequency, without exceeding its specified temperature rise.

Insulating Materials; what are they made of and what is their purpose?

Hammond Power Solutions utilizes Mylar, Nomex and other high quality insulating materials. Insulation is used to electrically insulate turn-to-turn windings, layer-to-layer windings, primary to secondary windings and ground.

What is the effect of "Overload"?

When a transformer is continually overloaded, excessive heat develops and the insulation system will begin to breakdown. As a result, the life expectancy of the transformer is shortened due to the heat exceeding the rating of the insulation system.

© Hammond Power Solutions Inc.
Data subject to change without notice.

Recommendations For Overcurrent Protection

UL AND CSA (NORTH AMERICAN) STANDARDS

North American standards, including UL 508, National Electric Code 450 and the Canadian Electrical Code Part I, require overcurrent protection on all control circuit transformers. There are two options for overcurrent protection:

Option 1

Provide an overcurrent device in the primary circuit rated to the current of the transformer. The overcurrent limits are as follows:

Primary 9 amps or more:	no more than 125% of rated current.
Primary 2 to 9 amps:	no more than 167% of rated current.
Primary less than 2 amps:	no more than 300% of rated current for power circuits.
	no more than 500% of rated current for control circuits.

This method is considered less desirable as start-up inrush to the transformer can frequently surpass the current rating of the device and result in nuisance interruptions.

Option 2

The second option is to install overcurrent devices in both the primary and secondary circuits of the transformer. In this option, the secondary device must be rated no more than 125% of rated current of the transformer and the primary no more than 250%. CEC permits 300% overcurrent on the primary for this option.

In both options listed, it is recommended that **time delay** fuses be considered to avoid unnecessary interruptions.

Secondary

The overcurrent protection listed below, in amperes, is 125% of the rated current of the transformer. Choose the next higher fuse rating if these numbers do not correspond with standard fuse selections.

Sec. Voltage	VA Rating															
	25	50	75	100	150	200	250	300	350	500	750	1000	1500	2000	3000	5000
12	2.7	5.3	7.9	11	16	21	27	-	-	-	-	-	-	-	-	-
24	1.4	2.7	4.0	5.3	7.9	11	14	16	19	27	-	-	-	-	-	-
90	0.4	0.7	1.1	1.4	2.1	2.8	3.5	4.2	4.9	7.0	11	14	21	28	-	-
95	0.4	0.7	1.0	1.4	2.0	2.7	3.3	4.0	4.7	6.6	9.9	14	20	27	-	-
100	0.4	0.7	1.0	1.3	1.9	2.5	3.2	3.8	4.4	6.3	9.4	13	19	25	-	-
110	0.3	0.6	0.9	1.2	1.8	2.3	2.9	3.5	4.0	5.7	8.6	12	18	23	-	-
115	0.3	0.6	0.9	1.1	1.7	2.2	2.8	3.3	3.9	5.5	8.2	11	17	22	-	-
120	0.3	0.6	0.8	1.1	1.6	2.1	2.7	3.2	3.7	5.3	7.9	11	16	21	-	-
220	0.15	0.3	0.5	0.6	0.9	1.2	1.5	1.8	2.0	2.9	4.3	5.7	8.6	12	18	29
230	0.14	0.3	0.5	0.6	0.9	1.1	1.4	1.7	2.0	2.8	4.1	5.5	8.2	11	17	28
240	0.14	0.3	0.4	0.6	0.8	1.1	1.4	1.6	1.9	2.7	4.0	5.3	7.9	11	16	27

© Hammond Power Solutions Inc.

Data subject to change without notice.

Recommendations for Overcurrent Protection

Primary (UL and CSA)

To assist in the selection of fuses, the following chart recommends the maximum primary fuse rating in amperes. The first number shown is the maximum overcurrent protection when the primary current is less than 2 amps and the overcurrent protection device is rated for 300%. The second number shown (italic) is recommended when the primary is less than 2 amps and the overcurrent device is to be rated at 500% of rated current. Where only one number is indicated, the primary is 2 amps or more and one rating of over current protection is shown as optimal. Choose the next higher fuse rating if these numbers do not correspond with standard fuse selections.

Pri.	VA Rating																
Volt	25	50	75	100	150	200	250	300	350	500	750	1000	1500	2000	3000	5000	7500
115	0.6	1.25	1.8	2.5	3.5	5	4	5	5	8	10	15	20	25	-	-	-
	1	*2*	*3.2*	*4*	*6.25*	*8*											
120	0.6	1.25	1.8	2.25	3.5	5	4	5	5	8	10	15	15	20	-	-	-
	1	*2*	*3*	*4*	*6.25*	*8*											
200	0.3	0.75	1.125	1.5	2.25	3	3.5	4.5	5	4.5	7	9	15	15	20	-	-
	0.6	*1.25*	*1.8*	*2.5*	*3.5*	*5*	*6.25*	*7.5*	*8*								
208	0.3	0.6	1	1.4	2	2.8	3.5	4	5	4	6	8	12	15	20	30	-
	0.6	*1.125*	*1.8*	*2.25*	*3.5*	*4.5*	*6*	*7*	*8*								
220	0.3	0.6	1	1.25	2	2.5	3.2	4	4.5	4	6	8	12	15	20	30	-
	0.5	*1.125*	*1.6*	*2.25*	*3.2*	*4.5*	*5.6*	*6.25*	*7.5*								
230	0.3	0.6	0.8	1.25	1.8	2.5	3.2	3.5	4.5	4	6	8	10	15	20	30	-
	0.5	*1*	*1.6*	*2*	*3.2*	*4*	*5*	*6.25*	*7.5*								
240	0.3	0.6	0.8	1.25	1.8	2.25	3	3.5	4	3.5	5	7	10	15	15	30	-
	0.5	*1*	*1.5*	*2*	*3*	*4*	*5*	*6.25*	*7*								
277	0.25	0.5	0.8	1	1.6	2	2.5	3.2	3.5	5	5	6	9	12	15	25	-
	0.4	*0.8*	*1.25*	*1.8*	*1.5*	*3.5*	*4.5*	*5*	*6.25*	*9*							
347	0.25	0.5	0.8	1	1.6	2	2.5	3.2	3.5	5	6.25	5	7.5	10	15	20	30
	0.4	*0.8*	*1.25*	*1.8*	*2.5*	*3.5*	*4.5*	*5*	*6.25*	*9*							
380	0.1875	0.3	0.5	0.75	1.125	1.5	1.8	2.25	2.5	3.5	5.6	4.5	6.25	9	15	20	25
	0.3	*0.6*	*0.8*	*1.25*	*1.8*	*2.5*	*3.2*	*3.5*	*4.5*	*6.25*	*9*						
400	0.1875	0.3	0.5	0.75	1.125	1.5	1.8	2.25	2.5	3.5	5.6	4.5	6.25	9	12	15	20
	0.3	*0.6*	*0.8*	*1.25*	*1.8*	*2.5*	*3*	*3.5*	*4*	*6.25*	*9*						
416	0.15	0.3	0.5	0.6	1	1.4	1.8	2	2.5	3.5	5	4	6	8	12	15	20
	0.3	*0.6*	*0.8*	*1.125*	*1.8*	*2.25*	*3*	*3.5*	*4*	*6*	*9*						
440	0.15	0.3	0.5	0.6	1	1.25	1.6	2	2.25	3.2	5	4	6	8	12	15	20
	0.25	*0.5*	*0.8*	*1.125*	*1.6*	*2.25*	*2.8*	*3.2*	*3.5*	*5.6*	*8*						
460	0.15	0.3	0.4	0.6	0.8	1.25	1.6	1.8	2.25	3.2	4.5	3.5	6	8	12	15	20
	0.25	*0.5*	*0.8*	*1*	*1.6*	*2*	*2.5*	*3.2*	*3.5*	*5*	*8*						
480	0.15	0.3	0.4	0.6	0.8	1.25	1.5	1.8	2	3	4.5	3.5	5	7	10	15	20
	0.25	*0.5*	*0.75*	*1*	*1.5*	*2*	*2.5*	*3*	*3.5*	*5*	*7.5*						
550	0.125	0.25	0.4	0.5	0.8	1	1.25	1.6	1.8	2.5	4	5	4.5	6	9	15	15
	0.2	*0.4*	*0.6*	*0.8*	*1.25*	*1.8*	*2.25*	*2.5*	*3*	*4.5*	*6.25*						
575	0.125	0.25	0.3	0.5	0.75	1	1.25	1.5	1.8	2.5	3.5	5	4.5	6	9	15	15
	0.2	*0.4*	*0.6*	*0.8*	*1.25*	*1.6*	*2*	*2.5*	*3*	*4*	*6.25*						
600	0.125	0.2	0.3	0.5	0.75	0.8	1.25	1.5	1.6	2.25	3.5	5	4	6	9	15	15
	0.2	*0.4*	*0.6*	*0.8*	*1.25*	*1.6*	*2*	*2.5*	*2.8*	*4*	*6.25*						

References: ***UL 508, 32.7***
UL 845, 11.16 and 11.17
NEC 430-72 (c) exception #2
NEC 450-3 (b) 1 and 2
CEC Part I, 26-256

© Hammond Power Solutions Inc.
Data subject to change without notice.

HPS Imperator® Machine Tool Industrial Control Transformer

The Perfect Solution

The HPS Imperator line of machine tool industrial control transformers are specifically designed to meet the high inrush industrial applications where electromagnetic components such as relays, solenoids etc. are used.

- 11 standard voltage groups
- VA range from 50VA to 1500VA
- Available with standard secondary and optional primary fuse kits
- Optional finger safe terminal covers
- Patented unique terminal block design
- Innovative fusing method
- Lifetime warranty (limited)

The HPS Imperator provides the perfect solution for any applications.

Superior Quality and Value

The HPS Imperator design, utilizing superior insulation systems and being constructed with high quality silicon steel laminations for optimum performance, will meet or exceed UL and CE standards.

Backed by an industry leading LIFETIME warranty, the HPS Imperator industrial control transformer line offers superior performance, quality and value.

STANDARDS

HPS Imperator Series Control Transformers meet or exceed the standards established by UL, IEC, and NEMA.

Standard	File #	VA Size
UL (ANSI/UL 506)	E50394	All
IEC 61558		All (excluding PH***AJ & PH***AR)
NEMA (ST-1)		All

At HPS, we rate the VA capacity of our transformers at the output ..... where it counts. Other transformer manufacturers rate their capacity on the input side of the transformer, which can result in a 5% to 20% lower actual VA at the output.

© Hammond Power Solutions Inc.

Data subject to change without notice.

MACHINE TOOL INDUSTRIAL CONTROL TRANSFORMER SELECTION

Selecting a Control Transformer requires that you have first hand knowledge of the application for the transformer and that you understand some basic terms related to the selection process. By using the following information, you will be sure to select the HPS Imperator® Control Transformer which best meets your application.

The HPS Imperator Series machine tool control transformers are specifically designed for high inrush applications requiring reliable output voltage stability. Designed to meet industrial applications where electromagnetic devices such as relays, solenoids, etc. are used, the HPS Imperator series transformers maximize inrush capability and output voltage regulation when electromagnetic devices are initially energized.

To select the proper transformer, three characteristics of the load circuit must first be determined. They are total steady-state (sealed) VA, total inrush VA, and inrush load power factor.

(A) The total steady state "sealed" VA is the amount of VA that the transformer must supply to the load circuit for an extended length of time. Simply add the total steady-state VA of all devices in your control circuit. The operating VA data of these components is available from the manufacturers.

(B) The total inrush VA is the amount of VA that the transformer must supply for all components in the control circuit which are energized together. Some consideration to the start-up sequence may be required. Inrush VA should be obtained from the device manufacturer.

(C) The inrush load power factor is difficult to determine without detailed vector analysis of all the control circuit components. Such information is not generally available. Therefore, HPS is recommending that a 40% power factor be utilized. Although some other control transformer manufacturers still recommend a power factor of only 20%, HPS, through recent tests conducted on many popular brands of control devices, has determined that the 40% power factor value is more accurate.

Once the above circuit variables have been determined, transformer selection is a six step process.

SIX EASY STEPS

1. Determine what your Primary (supply) and Secondary (output) voltage requirements are, as well as your required frequency (i.e. 60 Hz)

2. Calculate the Total Sealed VA of your circuit. (See Step A)

3. Calculate the Inrush VA by adding the inrush VA of all components being energized together. Remember to add the sealed VA of all components that do not have inrush VA, (lamps, timers etc.) as they present a load to the transformer during maximum inrush. If the inrush for the components in your circuit are not known, assume a 40% Inrush Power Factor.

4. Calculate the Total Inrush VA using one of the two methods:

A. Total Inrush VA =

$$\sqrt{(\text{VA sealed})^2 + (\text{VA inrush})^2}$$

OR

B. Total Inrush VA =
VA Sealed + VA Inrush

Note: method B will result in a slightly larger transformer being selected.

For VA sealed definition please refer to 1 (A).
For VA inrush definition please refer to 1 (B).

5. If the nominal supply voltage does not fluctuate more than 5%, then reference the 90% secondary voltage column in the Regulation Data Table for the correct VA rating.

If the supply voltage varies upwards of 10%, the 95% secondary voltage column should be used to size the transformer.

Current standards require electromagnetic devices to operate reliably at a minimum of 85% of their rated voltage. However, contact life may be affected with continuous start-ups at that voltage level. Therefore, the minimum 85% secondary voltage column should only be used as a reference.

6. Using the regulation data tables below, select the appropriate VA rated transformer:

A) With a continuous VA rating that is equal to or greater than the value in Step 2.

B) With a maximum inrush VA equal to or greater than the value obtained in Step 4.

To determine the correct HPS Transformer and its Catalog Number, just refer to the tables in this catalog for the voltage ratings, frequency and corresponding VA required.

HPS IMPERATOR® TRANSFORMERS REGULATION DATA TABLE

Continuous VA Transformer Nameplate Rating	Inrush VA @ 40% Power Factor		
	85% Secondary Voltage	90% Secondary Voltage	95% Secondary Voltage
50	330	259	192
75	350	258	170
100	620	467	321
150	895	699	512
250	1596	1229	880
350	2464	1889	1345
500	3939	2854	1819
750	6422	4778	3228
1000	9842	7102	4530
1500	12797	9018	5489

It is recommended that a Control Transformer be sized at a 40% Power Factor. Some components in a circuit, such as electromagnetic devices, typically operate at that level due to their inherently lower power factor. Selecting a transformer at 40% Power Factor will more than adequately size the unit for all the various loads in the circuit.

© Hammond Power Solutions Inc.
Data subject to change without notice.

Features & Benefits

- 600V class, machine tool rated industrial control transformers
- 11 standard multi primary and secondary voltage groups available[1]
- 50/60 Hertz (60Hz on PH***AJ & PH***AR)
- VA range from 50 to 1500[1]
- Superior insulation system
    - 50-150VA, temperature rise 55°C, insulation class 105°C
    - 250-1500VA, temperature rise 80°C, insulation class 130°C
- Constructed with high quality silicon steel laminations that provide optimum performance and reliability
- Encapsulated copper wound coils encased in a custom injection molded cover, protects coils and terminations from moisture, dirt and other industrial airborne contaminants
- Mounting Feet: made of heavy steel and welded or bolted to the core, these mounting feet provide superior strength in a compact design.
- Termination: combination slot/Phillips #6 screw, complete with SEMS washer (suitable for 18 AWG to 14 AWG solid or 14 AWG stranded wire)
- Standard SEMS washers - supplied on all units[2]
- Standard secondary fuse kits - utilizing 13/32” x 1 1/2” midget/type CC fuse clips
- Optional primary fuse kits available utilizing 13/32” x 1 1/2” midget/type CC fuse clips
- Optional finger safe terminal covers available on all units
- Seismically certified in accordance with IBC 2009; Section 1613 Earthquake Loads, for S_{DS} <= 2.00g , z/h = 1.0, and I_P = 1.5
- UL Listed (approved for U.S. and Canada)
- CE Mark standard on all units (excluding PH*AR and PH*AJ)
- LIFETIME Warranty (Limited)
- RoHS Compliant

[1] special voltages and VA sizes available upon request
[2] excluding PH750PG, PH1000PG, PH750MLI, PH1000MLI

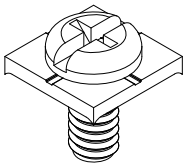

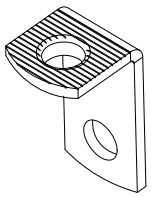

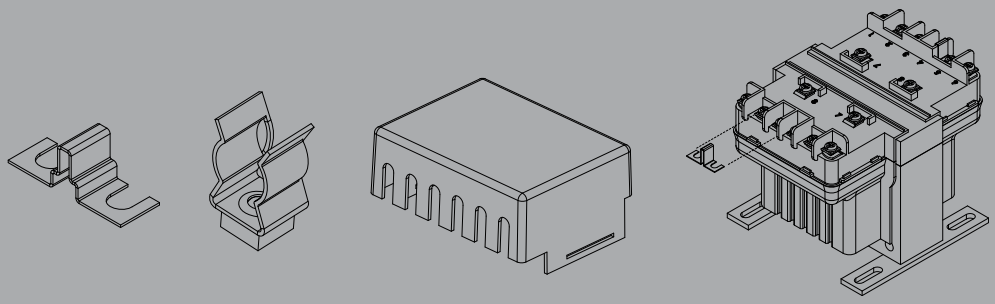

Lifetime WARRANTY

© Hammond Power Solutions Inc.

Data subject to change without notice.

Features & Benefits Continued

Terminal connection numbers molded into the terminal block and correspond to the nameplate and wiring diagrams, make connecting the HPS Imperator quick and simple.

SEMS washer allows for easy connection of supply or load wires with or without terminal connectors.

Standard secondary and optional primary fuse kits utilizing 13/32” x 1 1/2” midget/type CC fuse clips provide an economical solution to your fusing requirements (fuses not available).

Innovative terminal block design provides for easy hook-up and installation of fuse clips.

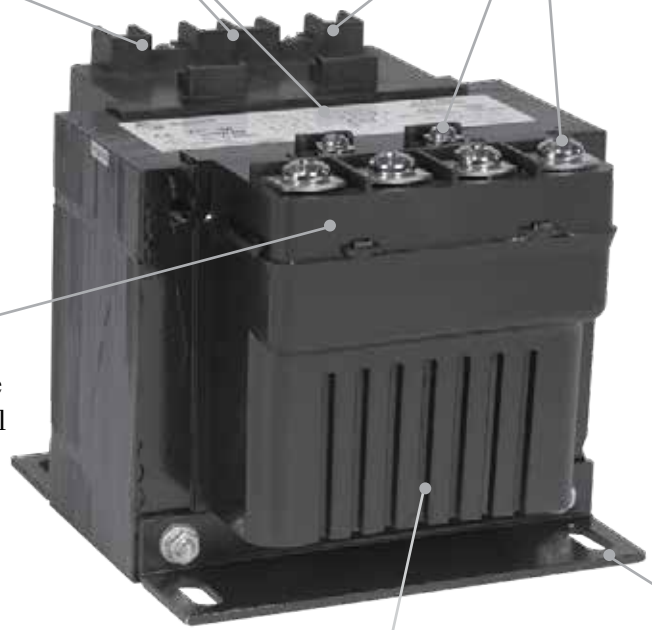

Optional removable finger safe terminal covers available on all units.

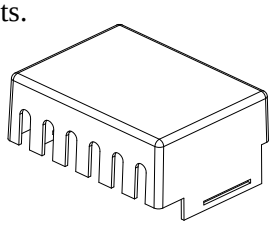

Made of heavy steel and welded or bolted to the core, these mounting feet provide superior strength in a compact design.

Custom injection molded coil cover with its unique “fin shaped” design combines superior cooling properties with a clean, bold look.

© Hammond Power Solutions Inc.

Data subject to change without notice.

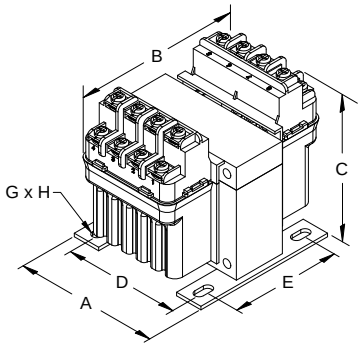

FIGURE A

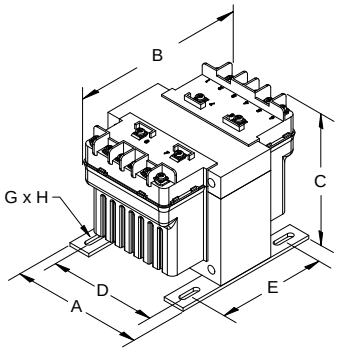

FIGURE B

Group A

Primary Voltage: **600** | 575 | 550

Secondary Voltage: **120 X 240** | 115 X 230 | 110 X 220

60 Hertz

VA Rating	Catalog Number	Mtg. Fig.	Output Amps	Overall Dimensions			Mounting Centers		Mounting Slot	Height with Finger Guard	Depth with Finger Guard	Approx. Ship Weight Lbs.	Optional Primary Fuse Kit P/N	Optional Unfused and Fused Finger Guard Kit P/N
				A	B	C	D	E	G X H					
50	**PH50AJ**	A	0.42/0.21	3.00	3.81	3.19	2.50	2.25	0.22 x 0.44	4.00	5.25	2.70	PFK1	FG1*/FGF1
75	**PH75AJ**	A	0.63/0.31	3.25	3.69	3.56	2.63	2.50	0.22 x 0.44	4.37	5.13	2.80	PFK1	FG2*/FGF2
100	**PH100AJ**	A	0.83/0.42	3.25	4.06	3.63	2.63	2.63	0.22 x 0.44	4.44	5.50	4.10	PFK1	FG2*/FGF2
150	**PH150AJ**	B	1.25/0.63	4.00	4.63	3.81	3.38	2.75	0.22 x 0.75	4.50	6.13	4.90	PFK2	FG3
250	**PH250AJ**	B	2.08/1.04	4.50	5.25	3.81	3.75	3.13	0.22 x 0.75	4.50	6.75	6.97	PFK2	FG3
350	**PH350AJ**	B	2.92/1.46	4.50	4.88	4.44	3.75	3.75	0.22 x 0.75	4.94	6.38	8.30	PFK3	FG4
500	**PH500AJ**	B	4.17/2.08	4.75	5.56	4.31	4.06	3.44	0.31 x 0.94	4.81	7.06	11.6	PFK3	FG4
750	**PH750AJ**	B	6.25/3.13	5.13	6.38	4.31	4.38	4.00	0.31 x 0.81	4.81	7.88	16.6	PFK3	FG4
1000	**PH1000AJ**	B	8.33/4.17	5.25	6.50	4.94	4.50	4.09	0.31 x 0.81	5.56	8.00	21.0	PFK3	FG5
1500	**PH1500AJ**	B	12.5/6.25	5.25	7.56	4.94	4.50	5.44	0.38 x 1.00	5.56	9.06	30.0	PFK3	FG5

Secondary fuse clips, fuse clip mounting screws and primary and secondary voltage links/jumpers supplied standard with transformers. **All dimensions in inches**
***Note: Unfused finger guard kits are marked with an asterisk, for more information refer to page 45.**
Refer to page 64 for wiring schematic drawing. Custom voltage and VA sizes available upon request.

Group B

Primary Voltage: **600** | 575 | 550

Secondary Voltage: **12 X 24** | 11.5 X 23 | 11 X 22

60 Hertz

VA Rating	Catalog Number	Mtg. Fig.	Output Amps	Overall Dimensions			Mounting Centers		Mounting Slot	Height with Finger Guard	Depth with Finger Guard	Approx. Ship Weight Lbs.	Optional Primary Fuse Kit P/N	Optional Unfused and Fused Finger Guard Kit P/N
				A	B	C	D	E	G X H					
50	**PH50AR**	A	4.17/2.08	3.00	3.81	3.19	2.50	2.25	0.22 x 0.44	4.00	5.25	2.70	PFK1	FG1*/FGF1
75	**PH75AR**	A	6.25/3.13	3.25	3.69	3.56	2.63	2.50	0.22 x 0.44	4.37	5.13	2.80	PFK1	FG2*/FGF2
100	**PH100AR**	A	8.33/4.17	3.25	4.19	3.63	2.63	2.63	0.22 x 0.44	4.44	5.63	4.50	PFK1	FG2*/FGF2
150	**PH150AR**	B	12.5/6.25	4.00	4.94	3.81	3.38	2.75	0.22 x 0.75	4.50	6.44	5.70	PFK2	FG3
250	**PH250AR**	B	20.8/10.4	4.50	5.44	3.81	3.75	3.13	0.22 x 0.75	4.50	6.94	7.50	PFK2	FG3
350	**PH350AR**	B	29.2/14.6	4.50	4.88	4.44	3.75	3.75	0.22 x 0.75	4.94	6.38	8.30	PFK3	FG4
500	**PH500AR**	B	41.7/20.8	4.75	5.56	4.31	4.06	3.44	0.31 x 0.94	4.81	7.06	11.6	PFK3	FG4

Secondary fuse clips, fuse clip mounting screws and primary and secondary voltage links/jumpers supplied with transformers. **All dimensions in inches**
***Note: Unfused finger guard kits are marked with an asterisk, for more information refer to page 45.**
Refer to page 65 for wiring schematic drawing. Custom voltages and VA sizes available upon request.

© Hammond Power Solutions Inc.

Data subject to change without notice.

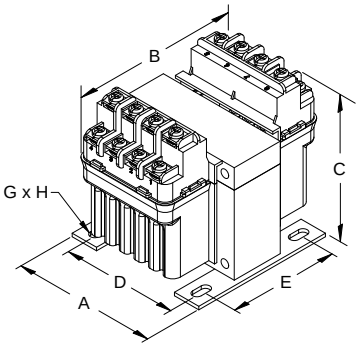

FIGURE A

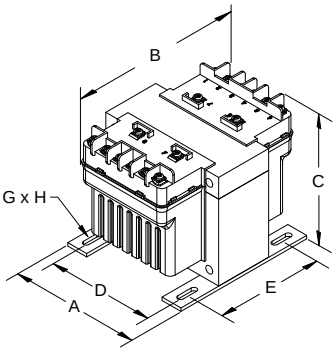

FIGURE B

Group C

Primary Voltage: **240 X 480** ‖ 230 X 460 ‖ 220 X 440
Secondary Voltage: **120 X 240** ‖ 115 X 230 ‖ 110 X 220 **50/60 Hertz**

VA Rating	Catalog Number	Mtg. Fig.	Output Amps	Overall Dimensions			Mounting Centers		Mounting Slot	Height with Finger Guard	Depth with Finger Guard	Approx. Ship Weight Lbs.	Optional Primary Fuse Kit P/N	Optional Unfused and Fused Finger Guard Kit P/N
				A	B	C	D	E	G X H					
50	**PH50MQMJ**	A	0.42/0.21	3.00	4.38	3.19	2.50	2.25	0.22 x 0.44	4.00	5.82	3.50	PFK1	FG1*/FGF1
75	**PH75MQMJ**	A	0.63/0.31	3.25	3.88	3.56	2.63	2.50	0.22 x 0.44	4.37	5.32	3.54	PFK1	FG2*/FGF2
100	**PH100MQMJ**	A	0.83/0.42	3.25	4.19	3.63	2.63	2.63	0.22 x 0.44	4.44	5.63	4.50	PFK1	FG2*/FGF2
150	**PH150MQMJ**	B	1.25/0.63	4.00	4.94	3.81	3.38	2.75	0.22 x 0.75	4.50	6.44	5.70	PFK2	FG3
250	**PH250MQMJ**	B	2.08/1.04	4.50	5.44	3.81	3.75	3.13	0.22 x 0.75	4.50	6.94	7.50	PFK2	FG3
350	**PH350MQMJ**	B	2.92/1.46	4.50	5.19	4.44	3.75	3.75	0.22 x 0.75	4.94	6.69	10.1	PFK3	FG4
500	**PH500MQMJ**	B	4.17/2.08	4.75	5.94	4.31	4.06	3.81	0.31 x 0.94	4.81	7.44	14.2	PFK3	FG4
750	**PH750MQMJ**	B	6.25/3.13	5.13	6.69	4.31	4.38	4.31	0.31 x 0.81	4.81	8.19	16.6	PFK3	FG4
1000	**PH1000MQMJ**	B	8.33/4.17	5.25	6.81	4.94	4.50	4.44	0.31 x 0.81	5.56	8.31	23.6	PFK3	FG5
1500	**PH1500MQMJ**	B	12.5/6.25	5.25	8.19	4.94	4.50	6.06	0.38 x 1.00	5.56	9.69	32.0	PFK3	FG5

Secondary fuse clips, fuse clip mounting screws and primary and secondary voltage links/jumpers supplied standard with transformers. **All dimensions in inches**
***Note: Unfused finger guard kits are marked with an asterisk, for more information refer to page 45.**
Refer to page 66 for wiring schematic drawing. Custom voltages and VA sizes available upon request.
***** Available with FACTORY INSTALLED Primary and Secondary Fuse Kits up to 1500VA. To order, add the suffix "-FK" to the above part number. Refer to page 44 for details. *****

Group D

Primary Voltage: **240 X 480** ‖ 230 X 460 ‖ 220 X 440
Secondary Voltage: **12 X 24** ‖ 11.5 X 23 ‖ 11 X 22 **50/60 Hertz**

VA Rating	Catalog Number	Mtg. Fig.	Output Amps	Overall Dimensions			Mounting Centers		Mounting Slot	Height with Finger Guard	Depth with Finger Guard	Approx. Ship Weight Lbs.	Optional Primary Fuse Kit P/N	Optional Unfused and Fused Finger Guard Kit P/N
				A	B	C	D	E	G X H					
50	**PH50QR**	A	4.17/2.08	3.00	4.38	3.19	2.50	2.25	0.22 x 0.44	4.00	5.82	3.50	PFK1	FG1*/FGF1
75	**PH75QR**	A	6.25/3.13	3.25	3.88	3.56	2.63	2.50	0.22 x 0.44	4.37	5.32	3.54	PFK1	FG2*/FGF2
100	**PH100QR**	A	8.33/4.17	3.25	4.19	3.63	2.63	2.63	0.22 x 0.44	4.44	5.63	4.50	PFK1	FG2*/FGF2
150	**PH150QR**	B	12.5/6.25	4.00	4.94	3.81	3.38	2.75	0.22 x 0.75	4.50	6.44	5.70	PFK2	FG3
250	**PH250QR**	B	20.8/10.4	4.50	5.44	3.81	3.75	3.13	0.22 x 0.75	4.50	6.94	7.50	PFK2	FG3
350	**PH350QR**	B	29.2/14.6	4.50	5.19	4.44	3.75	3.75	0.22 x 0.75	4.94	6.69	10.1	PFK3	FG4
500	**PH500QR**	B	41.7/20.8	4.75	5.94	4.31	4.06	3.81	0.31 x 0.94	4.81	7.44	14.2	PFK3	FG4

Secondary fuse clips, fuse clip mounting screws and primary and secondary voltage links/jumpers supplied standard with transformers. **All dimensions in inches**
***Note: Unfused finger guard kits are marked with an asterisk, for more information refer to page 45.**
Refer to page 67 for wiring schematic drawing. Custom voltages and VA sizes available upon request.

© Hammond Power Solutions Inc.
Data subject to change without notice.

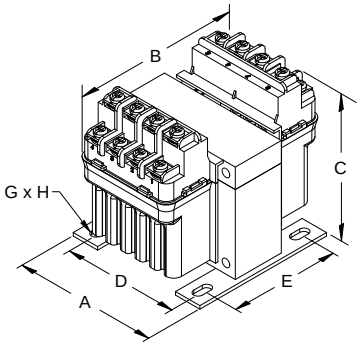

FIGURE A

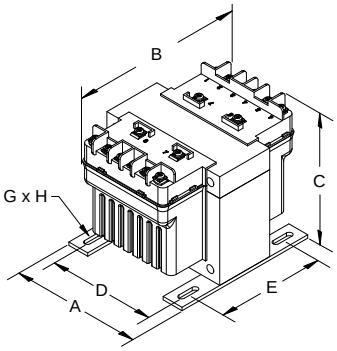

FIGURE B

Group E

Primary Voltage: **208 X 416** ‖ 200 X 400 ‖ 190 X 380
Secondary Voltage: **120 X 240** ‖ 115 X 230 ‖ 110 X 220 **50/60 Hertz**

VA Rating	Catalog Number	Mtg. Fig.	Output Amps	Overall Dimensions			Mounting Centers		Mounting Slot	Height with Finger Guard	Depth with Finger Guard	Approx. Ship Weight Lbs.	Optional Primary Fuse Kit P/N	Optional Unfused and Fused Finger Guard Kit P/N
				A	B	C	D	E	G X H					
50	**PH50SP**	A	0.42/0.21	3.00	4.38	3.19	2.50	2.25	0.22 x 0.44	4.00	5.82	3.50	PFK1	FG1*/FGF1
75	**PH75SP**	A	0.63/0.31	3.25	3.88	3.56	2.63	2.50	0.22 x 0.44	4.37	5.32	3.54	PFK1	FG2*/FGF2
100	**PH100SP**	A	0.83/0.42	3.25	4.19	3.63	2.63	2.63	0.22 x 0.44	4.44	5.63	4.50	PFK1	FG2*/FGF2
150	**PH150SP**	B	1.25/0.63	4.00	4.94	3.81	3.38	2.75	0.22 x 0.75	4.50	6.44	5.70	PFK2	FG3
250	**PH250SP**	B	2.08/1.04	4.50	5.44	3.81	3.75	3.13	0.22 x 0.75	4.50	6.94	7.50	PFK2	FG3
350	**PH350SP**	B	2.92/1.46	4.50	5.19	4.44	3.75	3.75	0.22 x 0.75	4.94	6.69	10.1	PFK3	FG4
500	**PH500SP**	B	4.17/2.08	4.75	5.94	4.31	4.06	3.81	0.31 x 0.94	4.81	7.44	14.2	PFK3	FG4
750	**PH750SP**	B	6.25/3.13	5.13	6.69	4.31	4.38	4.31	0.31 x 0.81	4.81	8.19	16.6	PFK3	FG4
1000	**PH1000SP**	B	8.33/4.17	5.25	6.81	4.94	4.50	4.44	0.31 x 0.81	5.56	8.31	23.6	PFK3	FG5

Secondary fuse clips, fuse clip mounting screws and primary and secondary voltage links/jumpers supplied standard with transformers. **All dimensions in inches**
***Note: Unfused finger guard kits are marked with an asterisk, for more information refer to page 45.**
Refer to page 68 for wiring schematic drawing. Custom voltages and VA sizes available upon request.

Group F

Primary Voltage: **120 X 240** ‖ 115 X 230 ‖ 110 X 220
Secondary Voltage: **120 X 240** ‖ 115 X 230 ‖ 110 X 220 **50/60 Hertz**

VA Rating	Catalog Number	Mtg. Fig.	Output Amps	Overall Dimensions			Mounting Centers		Mounting Slot	Height with Finger Guard	Depth with Finger Guard	Approx. Ship Weight Lbs.	Optional Primary Fuse Kit P/N	Optional Unfused and Fused Finger Guard Kit P/N
				A	B	C	D	E	G X H					
50	**PH50PP**	A	0.42/0.21	3.00	4.38	3.19	2.50	2.25	0.22 x 0.44	4.00	5.82	3.50	PFK1	FG1*/FGF1
75	**PH75PP**	A	0.63/0.31	3.25	3.88	3.56	2.63	2.50	0.22 x 0.44	4.37	5.32	3.54	PFK1	FG2*/FGF2
100	**PH100PP**	A	0.83/0.42	3.25	4.19	3.63	2.63	2.63	0.22 x 0.44	4.44	5.63	4.50	PFK1	FG2*/FGF2
150	**PH150PP**	B	1.25/0.63	4.00	4.94	3.81	3.38	2.75	0.22 x 0.75	4.50	6.44	5.70	PFK2	FG3
250	**PH250PP**	B	2.08/1.04	4.50	5.44	3.81	3.75	3.13	0.22 x 0.75	4.50	6.94	7.50	PFK2	FG3
350	**PH350PP**	B	2.92/1.46	4.50	5.19	4.44	3.75	3.75	0.22 x 0.75	4.94	6.69	10.1	PFK3	FG4
500	**PH500PP**	B	4.17/2.08	4.75	5.94	4.31	4.06	3.81	0.31 x 0.94	4.81	7.44	14.2	PFK3	FG4
750	**PH750PP**	B	6.25/3.13	5.13	6.69	4.31	4.38	4.31	0.31 x 0.81	4.81	8.19	16.6	PFK3	FG4
1000	**PH1000PP**	B	8.33/4.17	5.25	6.81	4.94	4.50	4.44	0.31 x 0.81	5.56	8.31	23.6	PFK3	FG5
1500	**PH1500PP**	B	12.5/6.25	5.25	8.19	4.94	4.50	6.06	0.38 x 1.0	5.56	9.69	32.0	PFK3	FG5

Secondary fuse clips, fuse clip mounting screws and primary and secondary voltage links/jumpers supplied standard with transformers. **All dimensions in inches**
***Note: Unfused finger guard kits are marked with an asterisk, for more information refer to page 45.**
Refer to page 69 for wiring schematic drawing. Custom voltages and VA sizes available upon request.

© Hammond Power Solutions Inc.
Data subject to change without notice.

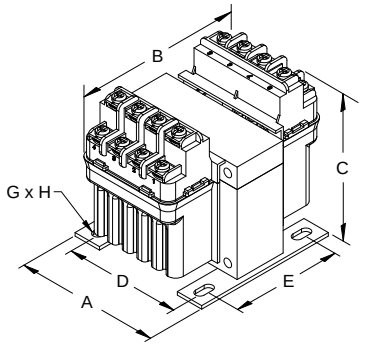

FIGURE A

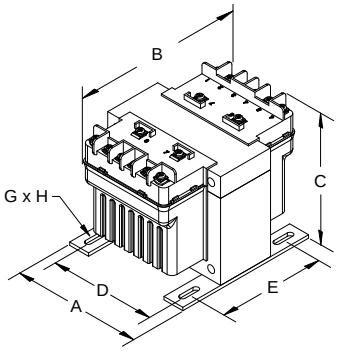

FIGURE B

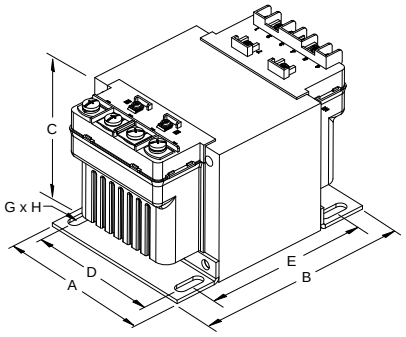

FIGURE C

Group G

Primary Voltage: **120 X 240** || 115 X 230 || 110 X 220
Secondary Voltage: **12 X 24** || 11.5 X 23 || 11 X 22

50/60 Hertz

VA Rating	Catalog Number	Mtg. Fig.	Output Amps	Overall Dimensions			Mounting Centers		Mounting Slot	Height with Finger Guard	Depth with Finger Guard	Approx. Ship Weight Lbs.	Optional Primary Fuse Kit P/N	Optional Unfused and Fused Finger Guard Kit P/N
				A	B	C	D	E	G X H					
50	**PH50PG**	A	4.17/2.08	3.00	4.38	3.19	2.50	2.25	0.22 x 0.44	4.00	5.82	3.50	PFK1	FG1*/FGF1
75	**PH75PG**	A	6.25/3.13	3.25	3.88	3.56	2.63	2.50	0.22 x 0.44	4.37	5.32	3.54	PFK1	FG2*/FGF2
100	**PH100PG**	A	8.33/4.17	3.25	4.19	3.63	2.63	2.63	0.22 x 0.44	4.44	5.63	4.50	PFK1	FG2*/FGF2
150	**PH150PG**	B	12.5/6.25	4.00	4.94	3.81	3.38	2.75	0.22 x 0.75	4.50	6.44	5.70	PFK2	FG3
250	**PH250PG**	B	20.8/10.4	4.50	5.44	3.81	3.75	3.13	0.22 x 0.75	4.50	6.94	7.50	PFK2	FG3
350	**PH350PG**	B	29.2/14.6	4.50	5.19	4.44	3.75	3.75	0.22 x 0.75	4.94	6.69	10.1	PFK3	FG4
500	**PH500PG**	B	41.7/20.8	4.75	5.94	4.31	4.06	3.81	0.31 x 0.94	4.81	7.44	14.2	PFK3	FG4
750	**PH750PG**	C	62.5/31.3	5.13	6.69	4.31	4.38	4.31	0.31 x 0.81	4.81	8.19	16.6	PFK3	FG5
1000	**PH1000PG**	C	83.3/41.7	5.25	6.81	4.94	4.50	4.44	0.31 x 0.81	5.56	8.31	23.6	PFK3	FG5

Secondary fuse clips and fuse clip mounting screws supplied standard with transformers up to and including 500VA. Primary and Secondary voltage links/jumpers supplied standard with transformers. **All dimensions in inches**
***Note: Unfused finger guard kits are marked with an asterisk, for more information refer to page 45.**
Refer to page 70 for wiring schematic drawing. Custom voltages and VA sizes available upon request.
***** Available with FACTORY INSTALLED Primary and Secondary Fuse Kits up to 1000VA. To order, add the suffix "-FK" to the above part number. Refer to page 44 for details. *****

Group H

Primary Voltage: 600/480/240 || **575/460/230** || 550/440/220
Secondary Voltage: 120/100 || **115/95** || 110/90

50/60 Hertz

VA Rating	Catalog Number	Mtg. Fig.	Output Amps	Overall Dimensions			Mounting Centers		Mounting Slot	Height with Finger Guard	Depth with Finger Guard	Approx. Ship Weight Lbs.	Optional Primary Fuse Kit P/N	Optional Unfused and Fused Finger Guard Kit P/N
				A	B	C	D	E	G X H					
50	**PH50MBMH**	A	0.43	3.25	4.06	3.63	2.63	2.63	0.22 x 0.44	4.44	5.50	4.10	PFK5	FG2*/FGF2
75	**PH75MBMH**	A	0.65	3.25	4.19	3.63	2.63	2.63	0.22 x 0.44	4.44	5.63	4.50	PFK5	FG2*/FGF2
100	**PH100MBMH**	B	0.87	4.00	4.63	3.81	3.38	2.75	0.22 x 0.75	4.50	6.13	4.90	PFK6	FG3
150	**PH150MBMH**	B	1.30	4.00	5.44	3.81	3.38	2.75	0.22 x 0.75	4.50	6.94	7.60	PFK6	FG3
250	**PH250MBMH**	B	2.17	4.50	5.19	4.44	3.75	3.75	0.22 x 0.75	4.94	6.69	10.1	PFK6	FG4
350	**PH350MBMH**	B	3.04	4.50	5.56	4.44	3.75	3.75	0.22 x 0.75	4.94	7.06	11.0	PFK7	FG4
500	**PH500MBMH**	B	4.35	4.75	6.69	4.31	4.06	4.50	0.31 x 0.94	4.81	8.19	16.3	PFK7	FG4
750	**PH750MBMH**	B	6.52	5.25	6.81	4.94	4.50	4.44	0.31 x 0.81	5.56	8.31	23.6	PFK7	FG5
1000	**PH1000MBMH**	B	8.70	5.25	8.19	4.94	4.50	5.81	0.31 x 0.81	5.56	9.69	31.2	PFK7	FG5
1500	**PH1500MBMH**	B	13.0	5.25	8.19	4.94	4.50	6.06	0.38 x 1.0	5.56	9.69	32.0	PFK7	FG5

Secondary fuse clips, fuse clip mounting screws and primary and secondary voltage links/jumpers supplied standard with transformers. **All dimensions in inches**
***Note: Unfused finger guard kits are marked with an asterisk, for more information refer to page 45.**
Refer to page 71 for wiring schematic drawing. Custom voltage and VA sizes available upon request.

© Hammond Power Solutions Inc.
Data subject to change without notice.

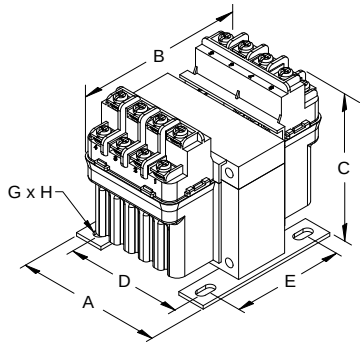

FIGURE A

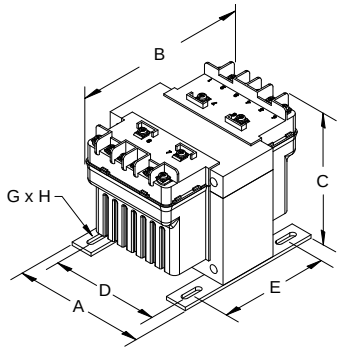

FIGURE B

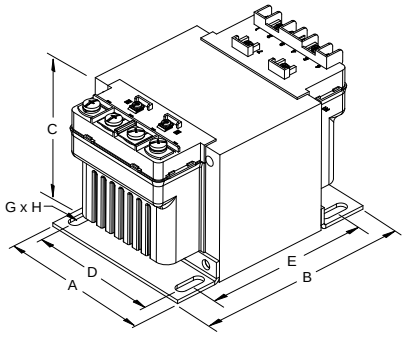

FIGURE C

Group I

Primary Voltage: 480/240 || **460/230/208** || 440/220/200
Secondary Voltage: 120/25 || **115/24** || 110/23

50/60 Hertz

VA Rating	Catalog Number	Mtg. Fig.	Output Amps	Overall Dimensions			Mounting Centers		Mounting Slot	Height with Finger Guard	Depth with Finger Guard	Approx. Ship Weight Lbs.	Optional Primary Fuse Kit P/N	Optional Unfused and Fused Finger Guard Kit P/N
				A	B	C	D	E	G X H					
50	**PH50MLI**	A	0.43/2.08	3.25	4.06	3.56	2.63	2.50	0.22 x 0.44	4.37	5.50	4.00	PFK5	FG2*/FGF2
75	**PH75MLI**	A	0.65/3.13	3.25	4.25	3.56	2.63	2.50	0.22 x 0.44	4.37	5.69	4.60	PFK5	FG2*/FGF2
100	**PH100MLI**	A	0.87/4.17	3.25	4.69	3.63	2.63	2.63	0.22 x 0.44	4.44	6.13	5.20	PFK5	FG2*/FGF2
150	**PH150MLI**	B	1.30/6.25	4.00	5.44	3.81	3.38	2.75	0.22 x 0.75	4.50	6.94	7.60	PFK6	FG3
250	**PH250MLI**	B	2.17/10.42	4.50	5.19	4.44	3.75	3.75	0.22 x 0.75	4.94	6.69	10.1	PFK6	FG4
350	**PH350MLI**	B	3.04/14.58	4.50	5.56	4.44	3.75	3.75	0.22 x 0.75	4.94	7.06	11.0	PFK7	FG4
500	**PH500MLI**	B	4.35/20.83	4.75	6.69	4.31	4.06	4.50	0.31 x 0.94	4.81	8.19	16.3	PFK7	FG4
750	**PH750MLI**	C	6.52/31.25	5.25	6.50	4.94	4.50	4.13	0.31 x 0.81	5.56	8.00	21.0	PFK7	FG5
1000	**PH1000MLI**	C	8.70/41.67	5.25	8.19	4.94	4.50	5.81	0.31 x 0.81	5.56	9.69	31.2	PFK7	FG5

Secondary fuse clips and fuse clip mounting screws supplied standard with transformers up to and including 500VA. **All dimensions in inches**
Primary and Secondary voltage links/jumpers supplied standard with transformers up to and including 1000VA.
***Note: Unfused finger guard kits are marked with an asterisk, for more information refer to page 45.**
Refer to page 72 for wiring schematic drawing. Custom voltages and VA sizes available upon request.
***** Available with FACTORY INSTALLED Primary and Secondary Fuse Kits up to 1000VA. To order, add the suffix "-FK" to the above part number. Refer to page 44 for details. *****

Group J

Primary Voltage: **415/400/380**
Secondary Voltage: **110 X 220**

50/60 Hertz

VA Rating	Catalog Number	Mtg. Fig.	Output Amps	Overall Dimensions			Mounting Centers		Mounting Slot	Height with Finger Guard	Depth with Finger Guard	Approx. Ship Weight Lbs.	Optional Primary Fuse Kit P/N	Optional Unfused and Fused Finger Guard Kit P/N
				A	B	C	D	E	G X H					
50	**PH50MEMX**	A	0.45/0.23	3.00	4.38	3.19	2.50	2.25	0.22 x 0.44	4.00	5.82	3.50	PFK4	FG1*/FGF1
75	**PH75MEMX**	A	0.68/0.34	3.25	4.06	3.63	2.63	2.63	0.22 x 0.44	4.44	5.50	4.10	PFK5	FG2*/FGF2
100	**PH100MEMX**	A	0.91/0.45	3.25	4.19	3.63	2.63	2.63	0.22 x 0.44	4.44	5.63	4.50	PFK5	FG2*/FGF2
150	**PH150MEMX**	B	1.36/0.68	4.00	4.94	3.81	3.38	2.75	0.22 x 0.75	4.50	6.44	5.70	PFK6	FG3
250	**PH250MEMX**	B	2.27/1.14	4.50	5.44	3.81	3.75	3.13	0.22 x 0.75	4.50	6.94	7.50	PFK6	FG3
350	**PH350MEMX**	B	3.18/1.59	4.50	5.19	4.44	3.75	3.75	0.22 x 0.75	4.94	6.69	10.1	PFK7	FG4
500	**PH500MEMX**	B	4.55/2.27	4.75	5.94	4.31	4.06	3.81	0.31 x 0.94	4.81	7.44	14.2	PFK7	FG4
750	**PH750MEMX**	B	6.82/3.41	5.25	6.50	4.94	4.50	4.13	0.31 x 0.81	5.56	8.00	21.0	PFK7	FG5
1000	**PH1000MEMX**	B	9.09/4.55	5.25	6.81	4.94	4.50	4.44	0.31 x 0.81	5.56	8.31	23.6	PFK7	FG5

Secondary fuse clips, fuse clip mounting screws and primary and secondary voltage links/jumpers supplied standard with transformers. **All dimensions in inches**
***Note: Unfused finger guard kits are marked with an asterisk, for more information refer to page 45.**
Refer to page 73 for wiring schematic drawing. Custom voltages and VA sizes available upon request.

© Hammond Power Solutions Inc.
Data subject to change without notice.

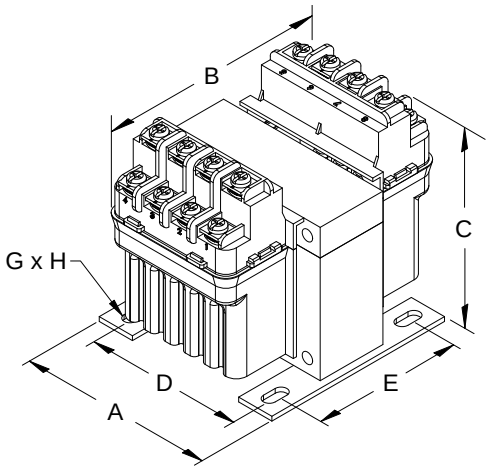

FIGURE A

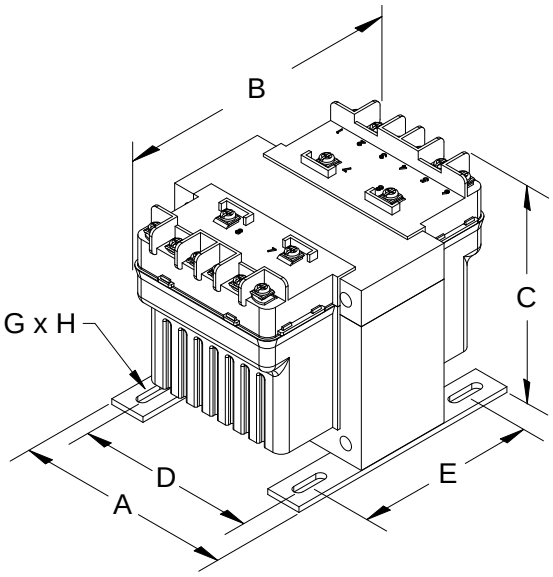

FIGURE B

Group K

Primary Voltage: **380/277/208**
Secondary Voltage: **120 X 240**

50/60 Hertz

VA Rating	Catalog Number	Mtg. Fig.	Output Amps	Overall Dimensions			Mounting Centers		Mounting Slot	Height with Finger Guard	Depth with Finger Guard	Approx. Ship Weight Lbs.	Optional Primary Fuse Kit P/N	Optional Unfused and Fused Finger Guard Kit P/N
				A	B	C	D	E	G X H					
50	**PH50MGJ**	A	0.42/0.21	3.25	3.88	3.56	2.63	2.50	0.22 x 0.44	4.37	5.32	3.54	PFK5	FG2*/FGF2
75	**PH75MGJ**	A	0.63/0.31	3.25	4.19	3.63	2.63	2.63	0.22 x 0.44	4.44	5.63	4.50	PFK5	FG2*/FGF2
100	**PH100MGJ**	A	0.83/0.42	3.25	4.69	3.63	2.63	2.63	0.22 x 0.44	4.44	6.13	5.20	PFK5	FG2*/FGF2
150	**PH150MGJ**	B	1.25/0.63	4.00	5.44	3.81	3.38	2.75	0.22 x 0.75	4.50	6.94	7.60	PFK6	FG3
250	**PH250MGJ**	B	2.08/1.04	4.50	4.88	4.44	3.75	3.75	0.22 x 0.75	4.94	6.38	8.30	PFK6	FG4
350	**PH350MGJ**	B	2.92/1.46	4.50	5.56	4.44	3.75	3.75	0.22 x 0.75	4.94	7.06	11.0	PFK7	FG4
500	**PH500MGJ**	B	4.17/2.08	4.75	6.69	4.31	4.06	4.50	0.31 x 0.94	4.81	8.19	16.3	PFK7	FG4
750	**PH750MGJ**	B	6.25/3.13	5.25	6.81	4.94	4.50	4.44	0.31 x 0.81	5.56	8.31	23.6	PFK7	FG5
1000	**PH1000MGJ**	B	8.33/4.17	5.25	7.25	4.94	4.50	4.83	0.31 x 0.81	5.44	8.75	25.5	PFK7	FG5

Secondary fuse clips, fuse clip mounting screws and primary and secondary voltage links/jumpers supplied standard with transformers. **All dimensions in inches**
***Note: Unfused finger guard kits are marked with an asterisk, for more information refer to page 45.**
Refer to page 74 for wiring schematic drawings. Custom voltages and VA sizes available upon request.

© Hammond Power Solutions Inc.

Data subject to change without notice.

Field Installed Fuse Kits

Standard Secondary Fuse Kits (Field Installed)

All HPS Imperator control transformers are supplied with standard secondary fuse kits which include: 13/32" x 1 1/2" midget/type CC fuse clips, fuse clip mounting screws, primary and secondary voltage links and the PHAK1 instruction sheet (note: secondary fuse clips and fuse clip mounting screws are not supplied on the PH750PG, PH1000PG, PH750MLI, and PH1000MLI).

Optional Primary Fuse Kits (Field Installed)

All HPS Imperator series machine tool industrial control transformers up to and including 1500VA are available with the following optional primary fuse kits:

Kit Part Number	Applicable Transformer Part Number Suffix's	Applicable VA Sizes	Parts Included in Kit
PFK1	*Refer to Specification Tables on Pages 38 to 43 for Optional Primary Fuse Kit P/N*	*Refer to Specification Tables on Pages 38 to 43 for Optional Primary Fuse Kit P/N*	4 fuse clips, 4 mtg. screws, PHAK1 instruction sheet
PFK2			4 fuse clips, 4 mtg. screws, PHAK1 instruction sheet
PFK3			4 fuse clips, 4 mtg. screws, PHAK1 instruction sheet
PFK4			4 fuse clips, 4 mtg. screws, 1 jumper, 1 finger guard, PHAK1 instruction sheet
PFK5			4 fuse clips, 4 mtg. screws, 1 jumper, 1 finger guard, PHAK1 instruction sheet
PFK5			4 fuse clips, 4 mtg. screws, 1 jumper, 1 finger guard, PHAK1 instruction sheet
PFK6			4 fuse clips, 4 mtg. screws, 1 jumper wire, PHAK1 instruction sheet
PFK6			4 fuse clips, 4 mtg. screws, 1 jumper wire, PHAK1 instruction sheet
PFK7			4 fuse clips, 4 mtg. screws, 1 jumper wire, PHAK1 instruction sheet

Note: Maximum allowable current rating on all primary and secondary fuse kits is 30 amps.

Factory Installed Fuse Kits

Factory Installed Primary and Secondary Fuse Kits

HPS now stocks some HPS Imperator series voltage groups with FACTORY INSTALLED primary and secondary fuse clips. To order, just add the suffix "**-FK**" to the end of the standard part number.

Factory installed fusing only available on units up to 1500VA. The voltage groups that are stocked are:

Group C (p/n: PH*MQMJ-FK) | Group G (p/n: PH***PG-FK) | Group I (p/n: PH***MLI-FK)**

On PH750PG-FK, PH1000PG-FK, PH750MLI-FK, and PH1000MLI-FK, only primary fuse clips are included on factory installed units. Secondary fuse clips are not included or available on these units.

Other voltage groups available with factory installed fuse kits. Please contact your HPS sales or customer service representative for details.

Note: *All factory installed fuse kits are pre-wired at the transformers highest primary voltage and the lowest secondary voltage. To hook up at a different primary or secondary voltage, please refer to the wiring instruction sheet included with the transformer.*

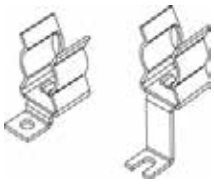

Sample Accessory Drawing for Fuse Clips
(for 50, 75 and 100VA)

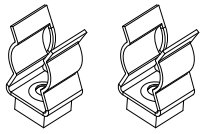

Sample Accessory Drawing for Fuse Clips
(for 150VA to 1500VA)

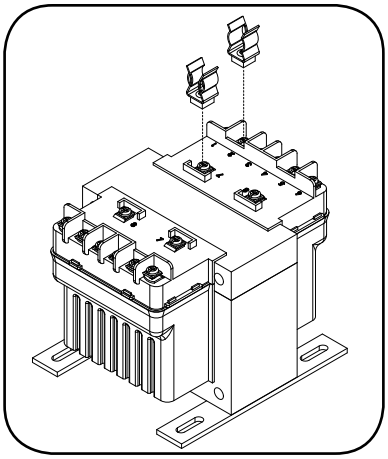

Sample Assembly Drawing for Secondary Fuse Clip Installation
(For 150VA to 1500VA)

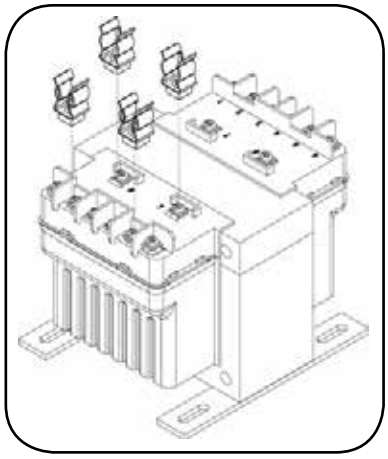

Sample Assembly Drawing for Primary Fuse Clip Installation
(For 150VA to 1500VA)

Note: HPS Imperator primary and secondary fuse kits are not suitable for *branch circuit* applications!

© Hammond Power Solutions Inc.

Data subject to change without notice.

Optional Accessories

Finger Guards

The HPS Imperator line of machine tool industrial molded control transformers are available with the following optional finger guard kits:

Optional Unfused Finger Guard Kits

Kit Part Number	Applicable Transformer Part Number Suffixes	Applicable VA Sizes
FG1	AJ, AR, MQMJ, MEMX, QR, SP, PG, PP	50
FG2	MBMH, MGJ, MLI	50
FG2	All	75
FG2	All (excluding PH100MBMH) *Refer to FG3, FG4 or FG5 below*	100 150 to 1500

Note: Each finger guard kit supplies either the primary or secondary side.
Included in the kit: 1 finger guard (unfused) and PHAK1 instruction sheet

Optional Fused Finger Guard Kits

Kit Part Number	Applicable Transformer Part Number Suffixes	Applicable VA Sizes	Parts Included in Kit
FGF1	AJ, AR, MQMJ, MEMX, QR, SP, PG, PP	50	1 finger guard (fused), PHAK1 instruction sheet
FGF2	MBMH, MGJ, MLI	50	1 finger guard (fused), PHAK1 instruction sheet
FGF2	All	75	1 finger guard (fused), PHAK1 instruction sheet
FGF2	All (excluding PH100MBMH)	100	1 finger guard (fused), PHAK1 instruction sheet
FG3	MBMH	100	1 finger guard, PHAK1 instruction sheet
FG3	All	150	1 finger guard, PHAK1 instruction sheet
FG3	AJ, AR, MQMJ, MEMX, QR, SP, PG, PP	250	1 finger guard, PHAK1 instruction sheet
FG4	MBMH, MGJ, MLI	250	1 finger guard, PHAK1 instruction sheet
FG4	All	350, 500	1 finger guard, PHAK1 instruction sheet
FG4	AJ, AR, MQMJ, QR, SP, PP	750	1 finger guard, PHAK1 instruction sheet
FG5	MBMH, MEMX, MGJ, MLI, PG	750	1 finger guard, PHAK1 instruction sheet
FG5	All	1000, 1500	1 finger guard, PHAK1 instruction sheet

Note: Each finger guard kit supplies either the primary or secondary side.

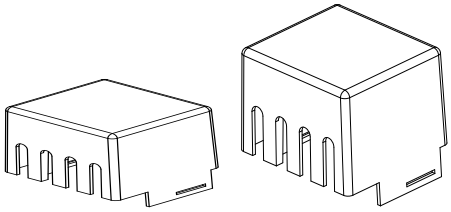

Sample Accessory Drawing for Fused & Unfused Finger Guards
(for 50, 75 and 100VA)

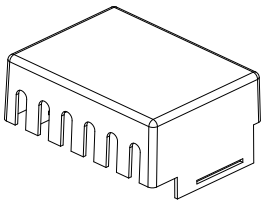

Sample Accessory Drawing for Finger Guards
(for 150VA and 1500VA)

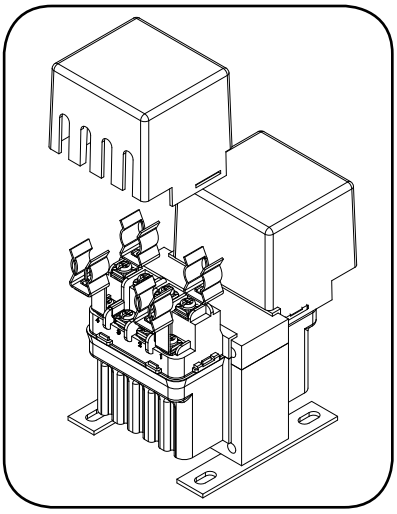

Sample Assembly Drawing for Finger Guard Installation
(For 50, 75 and 100VA)

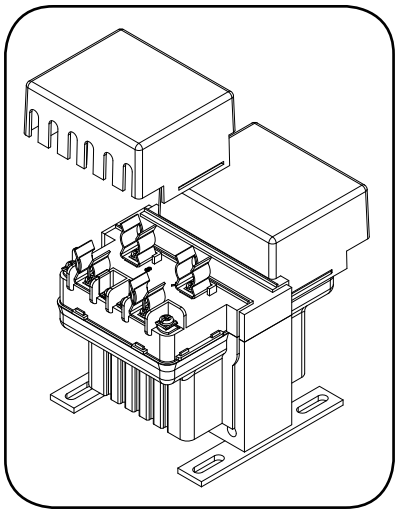

Sample Assembly Drawing for Finger Guard Installation
(For 150VA to 1500VA)

© Hammond Power Solutions Inc.
Data subject to change without notice.

HPS Spartan® Industrial Open-Style Control Transformer

The Economical Solution

The HPS Spartan® line of industrial control transformers are ideally suited for general purpose, industrial and light duty loads. Designed for applications where high inrush or machine tool duty are not necessary, the HPS Spartan industrial open-style control transformer offers an efficient and economical solution. These units are well suited for HVAC applications, signal and alarm systems, motor control circuits, lighting and circuit isolation.

The HPS Spartan control transformer is an open style unit with molded terminal blocks up to 3000 VA or 30 amps. Optional Finger guards and a fuse block adapter kit are available upon request.

For an economical approach to control transformers, the HPS Spartan is the transformer of choice.

STANDARDS

The HPS Spartan Control Transformers meet or exceed the standards established by UL, CSA, IEC and NEMA.

Standard	File #	VA Size
UL (ANSI/UL506)	E50394	All
CSA	LR3902	All
IEC 61558		All
NEMA (ST-1)		All

© Hammond Power Solutions Inc.

Data subject to change without notice.

Features and Benefits

- Molded terminal blocks for primary and secondary connections[1]
- Coil face termination over 3000VA or 30 amps
- Vacuum Impregnated with Polyester Resin and oven cured
- Bolted core construction
- Bolt-on mounting brackets
- All terminal blocks utilize a combination slot/Phillips #6 screw with a SEMS washer (suitable for 18 AWG to 14 AWG for solid wire and 18 AWG to 12 AWG for stranded wire). Coil face terminations utilize a ¼ - 20 UNC X 0.50" combination slot/Phillips screw and a spring lock washer
- All units supplied with primary and secondary voltage links/jumpers
- 50/60 Hz (60 Hz on SP***ACP and SP***AR)
- Copper wound coils with high dielectric strength insulation
- Seismically certified in accordance with IBC 2009; Section 1613 Earthquake Loads, for S_{DS} <= 2.00g , z/h = 1.0, and I_P = 1.5
- CSA Certified, UL Listed, CE Marked and RoHS compliant
- Meets NEMA standards
- Superior insulating materials. The HPS Spartan series transformers offer the following insulation systems:

Up to 1500 VA:	80°C rise, 130°C temperature class (B)
2000 VA to 5000 VA:	115°C rise, 180°C temperature class (F)

- "Premium Packaging"[1] which feature:
  - Premium fluted cartons
  - Custom molded foam inserts
  - Easy removal and repacking
  - Industry's best box label
- Supplied with trilingual installation and wiring instruction sheets
- 15 year warranty
- Optional finger guards available[1]
- Optional fuse block adapter kit available[1]

[1] **up to and including 3000VA or 30 amps**

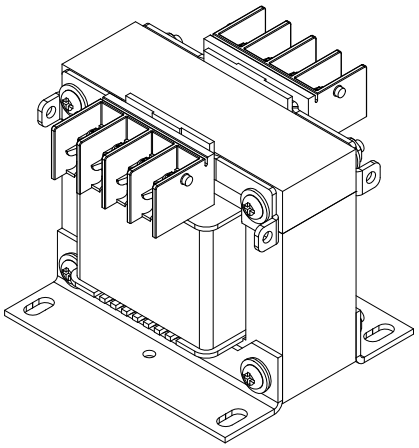

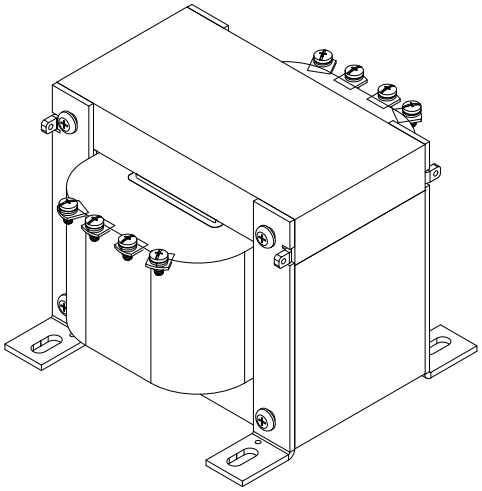

© Hammond Power Solutions Inc.

Data subject to change without notice.

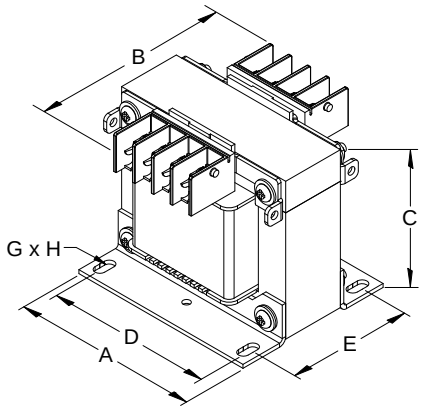

FIGURE A

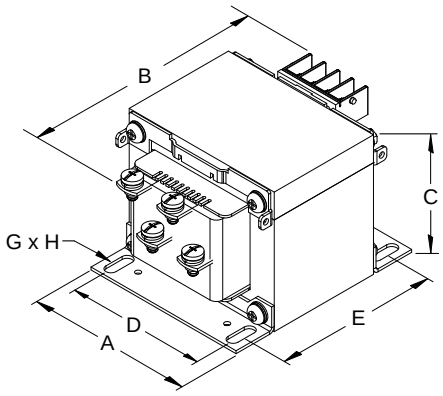

FIGURE B

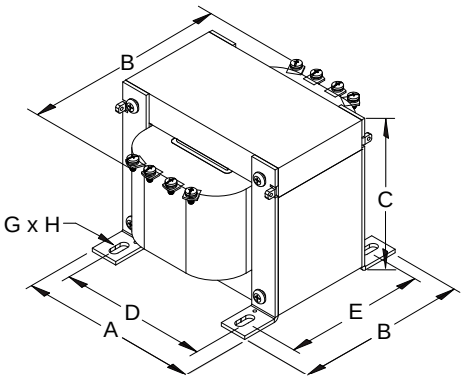

FIGURE C

Group A

Primary Voltage: 600/480 ‖ 575/460 ‖ 550/440
Secondary Voltage: 120 X 240 ‖ 115 X 230 ‖ 110 X 220

60 Hertz

VA Rating	CE VA Rating	Catalog Number	Mtg. Fig.	Output Amps	Overall Dimensions			Mounting Centers		Mounting Slot	Height with Finger Guard	Height with Fuse Block Adapter	Approx. Ship Weight Lbs.
					A	B	C	D	E	G X H			
50	50	**SP50ACP**	A	0.42/0.21	2.60	3.82	2.60	2.13	2.64	0.22 x 0.44	2.98	2.79	2.2
100	100	**SP100ACP**	A	0.83/0.42	2.99	3.74	2.85	2.52	2.60	0.22 x 0.44	3.23	3.04	3.3
150	150	**SP150ACP**	A	1.25/0.63	2.99	4.29	2.85	2.52	3.15	0.22 x 0.44	3.23	3.04	4.4
250	160	**SP250ACP**	A	2.08/1.04	3.78	4.09	3.40	3.31	2.99	0.22 x 0.44	3.78	3.59	6.4
350	250	**SP350ACP**	A	2.92/1.46	3.78	4.49	3.40	3.31	3.39	0.22 x 0.44	3.78	3.59	7.5
500	300	**SP500ACP**	A	4.17/2.08	4.49	4.69	3.78	3.78	3.66	0.31 x 0.81	4.16	3.97	11
750	500	**SP750ACP**	A	6.25/3.13	5.25	5.08[1]	4.37	4.50	4.06	0.31 x 0.81	4.75	4.56	18
1000	650	**SP1000ACP**	A	8.33/4.17	5.25	5.47[1]	4.37	4.50	4.45	0.31 x 0.81	4.75	4.56	21
1500	1000	**SP1500ACP**	A	12.5/6.25	5.25	6.85[1]	4.37	4.50	5.83	0.31 x 0.81	4.56	4.37	28
2000	1300	**SP2000ACP**	A	16.7/8.33	6.38	5.87[1]	5.31	5.75	4.84	0.31 x 0.81	5.69	5.50	34
3000	2000	**SP3000ACP**	A	25.0/12.5	7.50	7.50	6.50	6.30	6.85	0.44 x 1.00	6.50	6.50	60
5000	3000	**SP5000ACP**	C	41.7/20.8	8.98	9.88	7.76	7.40	7.13	0.44 x 1.00	N/A	N/A	93

Primary and Secondary voltage links/jumpers supplied standard with all transformers. Refer to page 75 for wiring schematic drawing. **All dimensions in inches**
Custom voltages and VA sizes available upon request.
[1] Note: For 750 through 2000 VA units actual overall depth is 0.24" plus the value in column B.

Group B

Primary Voltage: 600 ‖ 575 ‖ 550
Secondary Voltage: 12 X 24 ‖ 11.5 X 23 ‖ 11 X 22

60 Hertz

VA Rating	CE VA Rating	Catalog Number	Mtg. Fig.	Output Amps	Overall Dimensions			Mounting Centers		Mounting Slot	Height with Finger Guard	Height with Fuse Block Adapter	Approx. Ship Weight Lbs.
					A	B	C	D	E	G X H			
50	50	**SP50AR**	A	4.17/2.08	2.60	3.23	2.60	2.13	2.05	0.22 x 0.44	2.98	2.79	1.5
100	100	**SP100AR**	A	8.33/4.17	2.99	3.74	2.85	2.52	2.60	0.22 x 0.44	3.23	3.04	3.3
150	150	**SP150AR**	A	12.5/6.25	2.99	4.09	2.85	2.52	2.95	0.22 x 0.44	3.23	3.04	3.9
250	160	**SP250AR**	A	20.8/10.4	3.78	3.70	3.40	3.31	2.60	0.22 x 0.44	3.78	3.59	5.2
350	250	**SP350AR**	A	29.2/14.6	3.78	4.29	3.40	3.31	3.19	0.22 x 0.44	3.78	3.59	7.1
500	300	**SP500AR**	B	41.7/20.8	4.49	5.08	3.78	3.78	3.27	0.31 x 0.81	4.16	3.97	9.9

Primary and Secondary voltage links/jumpers supplied standard with all transformers. **All dimensions in inches**
Refer to page 75 for wiring schematic drawing. Custom voltages and VA sizes available upon request.

© Hammond Power Solutions Inc.

Data subject to change without notice.

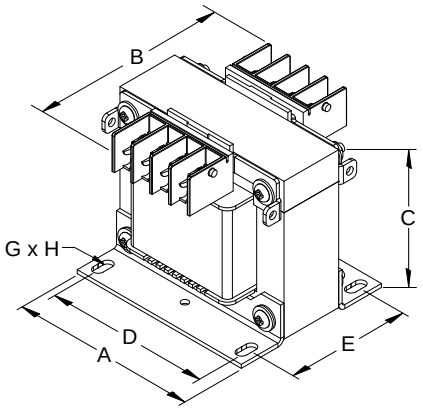

FIGURE A

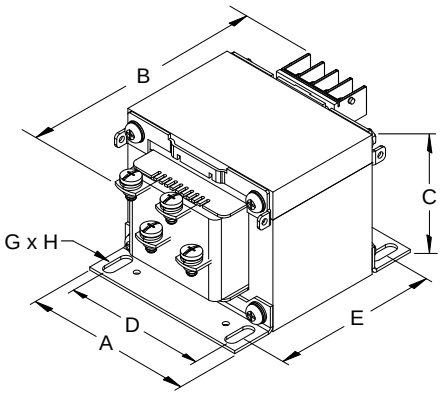

FIGURE B

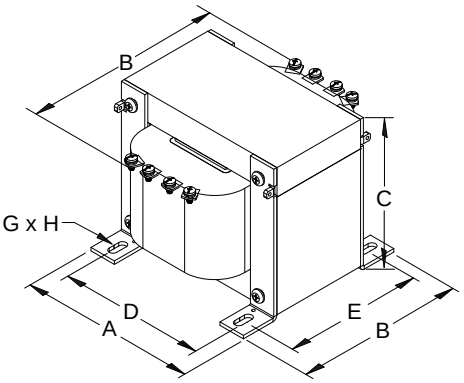

FIGURE C

Group C

Primary Voltage: 240 X 480 | 230 X 460 | 220 X 440
Secondary Voltage: 120 X 240 | 115 X 230 | 110 X 220

50/60 Hertz

VA Rating	CE VA Rating	Catalog Number	Mtg. Fig.	Output Amps	Overall Dimensions			Mounting Centers		Mounting Slot	Height with Finger Guard	Height with Fuse Block Adapter	Approx. Ship Weight Lbs.
					A	B	C	D	E	G X H			
50	50	**SP50MQMJ**	A	0.42/0.21	2.60	3.35	2.60	2.13	2.17	0.22 x 0.44	2.98	2.79	1.7
100	100	**SP100MQMJ**	A	0.83/0.42	2.99	3.74	2.85	2.52	2.60	0.22 x 0.44	3.23	3.04	3
150	150	**SP150MQMJ**	A	1.25/0.63	2.99	4.29	2.85	2.52	3.15	0.22 x 0.44	3.23	3.04	4.3
250	160	**SP250MQMJ**	A	2.08/1.04	3.78	4.09	3.40	3.31	2.99	0.22 x 0.44	3.78	3.59	6.5
350	250	**SP350MQMJ**	A	2.92/1.46	3.78	4.69	3.40	3.31	3.58	0.22 x 0.44	3.78	3.59	8.2
500	300	**SP500MQMJ**	A	4.17/2.08	4.49	4.69	3.78	3.78	3.66	0.31 x 0.81	4.16	3.97	11
750	500	**SP750MQMJ**	A	6.25/3.13	5.25	4.69[1]	4.37	4.50	3.66	0.31 x 0.81	4.75	4.56	16
1000	650	**SP1000MQMJ**	A	8.33/4.17	5.25	5.47[1]	4.37	4.50	4.45	0.31 x 0.81	4.75	4.56	21
1500	1000	**SP1500MQMJ**	A	12.5/6.25	5.25	6.85[1]	4.37	4.50	5.83	0.31 x 0.81	4.75	4.56	28
2000	1300	**SP2000MQMJ**	A	16.7/8.33	6.38	5.87[1]	5.31	5.75	4.84	0.31 x 0.81	5.50	5.31	35
3000	2000	**SP3000MQMJ**	A	25.0/12.5	7.50	7.50	6.50	6.30	7.28	0.44 x 1.00	6.50	6.50	64
5000	3000	**SP5000MQMJ**	C	41.7/20.8	8.98	9.88	7.76	7.40	7.28	0.44 x 1.00	N/A	N/A	97

Primary and Secondary voltage links/jumpers supplied standard with all transformers. **All dimensions in inches**
Refer to page 76 for wiring schematic drawing. Custom voltages and VA sizes available upon request.
[1] Note: For 750 through 2000 VA units actual overall depth is 0.24" plus the value in column B.

Group D

Primary Voltage: 240 X 480 | 230 X 460 | 220 X 440
Secondary Voltage: 12 X 24 | 11.5 X 23 | 11 X 22

50/60 Hertz

VA Rating	CE VA Rating	Catalog Number	Mtg. Fig.	Output Amps	Overall Dimensions			Mounting Centers		Mounting Slot	Height with Finger Guard	Height with Fuse Block Adapter	Approx. Ship Weight Lbs.
					A	B	C	D	E	G X H			
50	50	**SP50QR**	A	4.17/2.08	2.60	3.35	2.60	2.13	2.17	0.22 x 0.44	2.98	2.79	1.7
100	100	**SP100QR**	A	8.33/4.17	2.99	3.54	2.85	2.52	2.40	0.22 x 0.44	3.23	3.04	3
150	150	**SP150QR**	A	12.5/6.25	2.99	4.29	2.85	2.52	3.15	0.22 x 0.44	3.23	3.04	4.3
250	160	**SP250QR**	A	20.8/10.4	3.78	4.09	3.40	3.31	2.99	0.22 x 0.44	3.78	3.59	6.5
350	250	**SP350QR**	A	29.2/14.6	3.78	4.69	3.40	3.31	3.58	0.22 x 0.44	3.78	3.59	8.3
500	300	**SP500QR**	B	41.7/20.8	4.49	5.47	3.78	3.78	3.66	0.31 x 0.81	4.16	3.97	11

Primary and Secondary voltage links/jumpers supplied standard with all transformers. **All dimensions in inches**
Refer to page 76 for wiring schematic drawing. Custom voltages and VA sizes available upon request.

© Hammond Power Solutions Inc.
Data subject to change without notice.

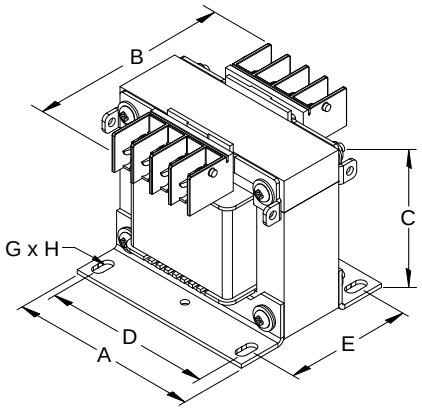

FIGURE A

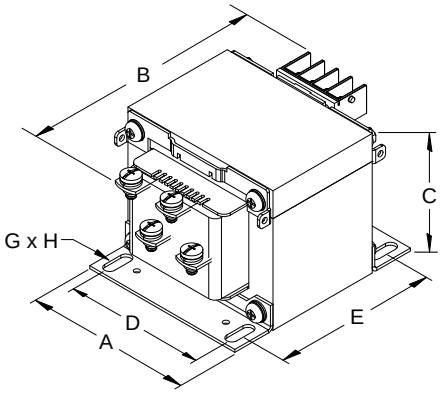

FIGURE B

Group E

Primary Voltage: 380/347
Secondary Voltage: 120 X 240

50/60 Hertz

VA Rating	CE VA Rating	Catalog Number	Mtg. Fig.	Output Amps	Overall Dimensions			Mounting Centers		Mounting Slot	Height with Finger Guard	Height with Fuse Block Adapter	Approx. Ship Weight Lbs.
					A	B	C	D	E	G X H			
50	50	**SP50KHP**	A	0.42/0.21	2.60	3.35	2.60	2.13	2.17	0.22 x 0.44	2.98	2.79	1.7
100	100	**SP100KHP**	A	0.83/0.42	2.99	3.74	2.85	2.52	2.60	0.22 x 0.44	3.23	3.04	3.4
150	150	**SP150KHP**	A	1.25/0.63	2.99	4.29	2.85	2.52	3.15	0.22 x 0.44	3.23	3.04	4.4
250	160	**SP250KHP**	A	2.08/1.04	3.78	4.09	3.40	3.31	2.99	0.22 x 0.44	3.78	3.59	6.7
350	250	**SP350KHP**	A	2.92/1.46	3.78	4.69	3.40	3.31	3.58	0.22 x 0.44	3.78	3.59	8.4
500	300	**SP500KHP**	A	4.17/2.08	4.49	4.69	3.78	3.78	3.66	0.31 x 0.81	4.16	3.97	12
750	500	**SP750KHP**	A	6.25/3.13	5.25	4.69[1]	4.37	4.50	3.66	0.31 x 0.81	4.75	4.56	17
1000	650	**SP1000KHP**	A	8.33/4.17	5.25	5.47[1]	4.37	4.50	4.45	0.31 x 0.81	4.75	4.56	21
1500	1000	**SP1500KHP**	A	12.5/6.25	6.38	4.88[1]	5.31	5.75	3.86	0.31 x 0.81	5.50	5.31	29

Primary and Secondary voltage links/jumpers supplied standard with all transformers. **All dimensions in inches**
Refer to page 77 for wiring schematic drawing. Custom voltages and VA sizes available upon request.
[1] Note: For 750 through 1500 VA units actual overall depth is 0.24" plus the value in column B.

Group F

Primary Voltage: 380/347
Secondary Voltage: 12 X 24

50/60 Hertz

VA Rating	CE VA Rating	Catalog Number	Mtg. Fig.	Output Amps	Overall Dimensions			Mounting Centers		Mounting Slot	Height with Finger Guard	Height with Fuse Block Adapter	Approx. Ship Weight Lbs.
					A	B	C	D	E	G X H			
50	50	**SP50KHR**	A	4.17/2.08	2.60	3.35	2.60	2.13	2.17	0.22 x 0.44	2.98	2.79	1.7
100	100	**SP100KHR**	A	8.33/4.17	2.99	3.74	2.85	2.52	2.60	0.22 x 0.44	3.23	3.04	3.3
150	150	**SP150KHR**	A	12.5/6.25	2.99	4.29	2.85	2.52	3.15	0.22 x 0.44	3.23	3.04	4.4
250	160	**SP250KHR**	A	20.8/10.4	3.78	4.09	3.40	3.31	2.99	0.22 x 0.44	3.78	3.59	6.4
350	250	**SP350KHR**	A	29.2/14.6	3.78	4.69	3.40	3.31	3.58	0.22 x 0.44	3.78	3.59	8.1
500	300	**SP500KHR**	B	41.7/20.8	4.49	5.47	3.78	3.78	3.66	0.31 x 0.81	4.16	3.97	11

Primary and Secondary voltage links/jumpers supplied standard with all transformers. **All dimensions in inches**
Refer to page 77 for wiring schematic drawing. Custom voltages and VA sizes available upon request.

© Hammond Power Solutions Inc.
Data subject to change without notice.

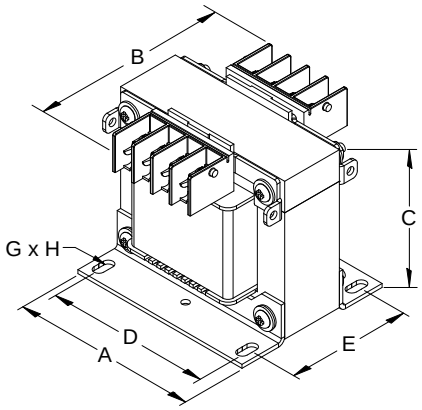

FIGURE A

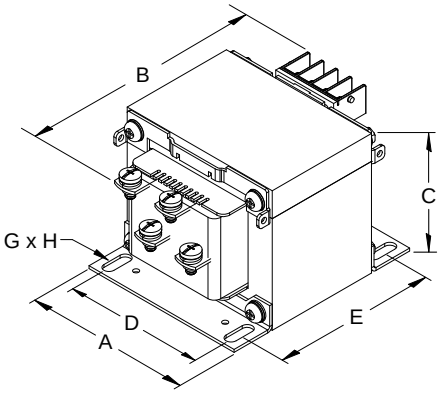

FIGURE B

Group G

Primary Voltage: 277
Secondary Voltage: 120

50/60 Hertz

VA Rating	CE VA Rating	Catalog Number	Mtg. Fig.	Output Amps	Overall Dimensions			Mounting Centers		Mounting Slot	Height with Finger Guard	Height with Fuse Block Adapter	Approx. Ship Weight Lbs.
					A	B	C	D	E	G X H			
50	50	**SP50NJ**	A	0.42	2.60	3.35	2.60	2.13	2.17	0.22 x 0.44	2.98	2.79	1.6
100	100	**SP100NJ**	A	0.83	2.99	3.54	2.85	2.52	2.40	0.22 x 0.44	3.23	3.04	3.2
150	150	**SP150NJ**	A	1.25	2.99	4.29	2.85	2.52	3.15	0.22 x 0.44	3.23	3.04	4.3
250	160	**SP250NJ**	A	2.08	3.78	4.09	3.40	3.31	2.99	0.22 x 0.44	3.78	3.59	6.4
350	250	**SP350NJ**	A	2.92	3.78	4.69	3.40	3.31	3.58	0.22 x 0.44	3.78	3.59	8.1
500	300	**SP500NJ**	A	4.17	4.49	4.69	3.78	3.78	3.66	0.31 x 0.81	4.16	3.97	11
750	500	**SP750NJ**	A	6.25	5.25	5.08[1]	4.37	4.50	4.06	0.31 x 0.81	4.75	4.56	18
1000	650	**SP1000NJ**	A	8.33	5.25	5.47[1]	4.37	4.50	4.45	0.31 x 0.81	4.75	4.56	20
1500	1000	**SP1500NJ**	A	12.50	5.25	6.85[1]	4.37	4.50	5.83	0.31 x 0.81	4.75	4.56	29

Primary and Secondary voltage links/jumpers supplied standard with all transformers. **All dimensions in inches**
Refer to page 78 for wiring schematic drawing. Custom voltages and VA sizes available upon request.
[1] Note: For 750 through 1500 VA units actual overall depth is 0.24" plus the value in column B.

Group H

Primary Voltage: 120 X 240 ‖ 115 X 230 ‖ 110 X 220
Secondary Voltage: 12 X 24 ‖ 11.5 X 23 ‖ 11 X 22

50/60 Hertz

VA Rating	CE VA Rating	Catalog Number	Mtg. Fig.	Output Amps	Overall Dimensions			Mounting Centers		Mounting Slot	Height with Finger Guard	Height with Fuse Block Adapter	Approx. Ship Weight Lbs.
					A	B	C	D	E	G X H			
50	50	**SP50PR**	A	4.17/2.08	2.60	3.35	2.60	2.13	2.17	0.22 x 0.44	2.98	2.79	1.7
100	100	**SP100PR**	A	8.33/4.17	2.99	3.74	2.85	2.52	2.60	0.22 x 0.44	3.23	3.04	3
150	150	**SP150PR**	A	12.5/6.25	2.99	4.29	2.85	2.52	3.15	0.22 x 0.44	3.23	3.04	4.3
250	160	**SP250PR**	A	20.8/10.4	3.78	3.90	3.40	3.31	2.80	0.22 x 0.44	3.78	3.59	5.9
350	250	**SP350PR**	A	29.2/14.6	3.78	4.69	3.40	3.31	3.58	0.22 x 0.44	3.78	3.59	8.2
500	300	**SP500PR**	B	41.7/20.8	4.49	5.47	3.78	3.78	3.66	0.31 x 0.81	4.16	3.97	11

Primary and Secondary voltage links/jumpers supplied standard with all transformers. **All dimensions in inches**
Refer to page 78 for wiring schematic drawing. Custom voltages and VA sizes available upon request.

© Hammond Power Solutions Inc.
Data subject to change without notice.

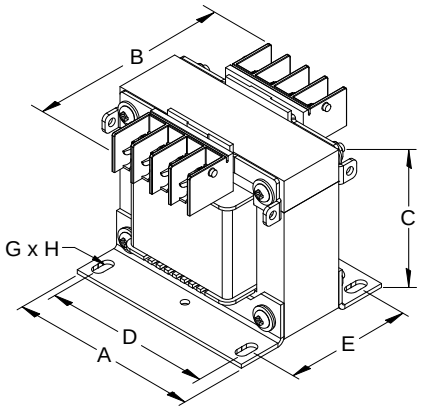

FIGURE A

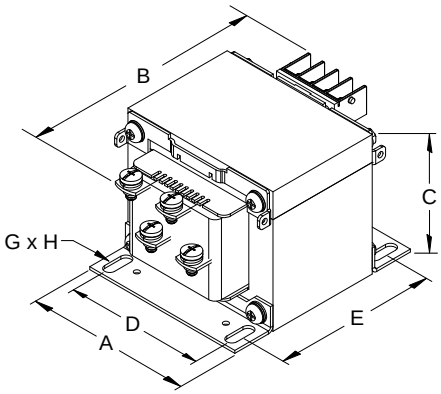

FIGURE B

Group I

Primary Voltage: 208 X 416 ‖ 200 X 400 ‖ 190 X 380
Secondary Voltage: 120 X 240 ‖ 115 X 230 ‖ 110 X 220
50/60 Hertz

VA Rating	CE VA Rating	Catalog Number	Mtg. Fig.	Output Amps	Overall Dimensions			Mounting Centers		Mounting Slot	Height with Finger Guard	Height with Fuse Block Adapter	Approx. Ship Weight Lbs.
					A	B	C	D	E	G X H			
50	50	**SP50SP**	A	0.42/0.21	2.60	3.35	2.60	2.13	2.17	0.22 x 0.44	1.6	2.60	1.6
100	100	**SP100SP**	A	0.83/0.42	2.99	3.54	2.85	2.52	2.40	0.22 x 0.44	3	2.85	3
150	150	**SP150SP**	A	1.25/0.63	2.99	4.29	2.85	2.52	3.15	0.22 x 0.44	4.3	2.85	4.3
250	160	**SP250SP**	A	2.08/1.04	3.78	4.09	3.40	3.31	2.99	0.22 x 0.44	6.5	3.40	6.5
350	250	**SP350SP**	A	2.92/1.46	3.78	4.69	3.40	3.31	3.58	0.22 x 0.44	8.3	3.40	8.3
500	300	**SP500SP**	A	4.17/2.08	4.49	4.69	3.78	3.78	3.66	0.31 x 0.81	11	3.78	11
750	500	**SP750SP**	A	6.25/3.13	5.25	4.69[1]	4.37	4.50	3.66	0.31 x 0.81	16	4.75	16
1000	650	**SP1000SP**	A	8.33/4.17	5.25	5.47[1]	4.37	4.50	4.45	0.31 x 0.81	20	4.75	20
1500	1000	**SP1500SP**	A	12.5/6.25	6.38	4.88[1]	5.31	5.75	3.86	0.31 x 0.81	27	5.69	27

Primary and Secondary voltage links/jumpers supplied standard with all transformers. **All dimensions in inches**
Refer to page 79 for wiring schematic drawing. Custom voltages and VA sizes available upon request.
[1] Note: For 750 through 1500 VA units actual overall depth is 0.24" plus the value in column B.

Group J

Primary Voltage: 208 X 416 ‖ 200 X 400 ‖ 190 X 380
Secondary Voltage: 12 X 24 ‖ 11.5 X 23 ‖ 11 X 22
50/60 Hertz

VA Rating	CE VA Rating	Catalog Number	Mtg. Fig.	Output Amps	Overall Dimensions			Mounting Centers		Mounting Slot	Height with Finger Guard	Height with Fuse Block Adapter	Approx. Ship Weight Lbs.
					A	B	C	D	E	G X H			
50	50	**SP50SR**	A	4.17/2.08	2.60	3.35	2.60	2.13	2.17	0.22 x 0.44	2.98	2.79	1.6
100	100	**SP100SR**	A	8.33/4.17	2.99	3.54	2.85	2.52	2.40	0.22 x 0.44	3.23	3.04	3.1
150	150	**SP150SR**	A	12.5/6.25	2.99	4.29	2.85	2.52	3.15	0.22 x 0.44	3.23	3.04	4.3
250	160	**SP250SR**	A	20.8/10.4	3.78	4.09	3.40	3.31	2.99	0.22 x 0.44	3.78	3.59	6.5
350	250	**SP350SR**	A	29.2/14.6	3.78	4.69	3.40	3.31	3.58	0.22 x 0.44	3.78	3.59	8.3
500	300	**SP500SR**	B	41.7/20.8	4.49	5.47	3.78	3.78	3.66	0.31 x 0.81	4.16	3.97	11

Primary and Secondary voltage links/jumpers supplied standard with all transformers. **All dimensions in inches**
Refer to page 79 for wiring schematic drawing. Custom voltages and VA sizes available upon request.

© Hammond Power Solutions Inc.
Data subject to change without notice.

Optional Accessories

Finger Guards

HPS Spartan industrial control transformers up to and including 3000VA or 30 amps are available with optional finger guards.

Part Number	Applicable Transformer Part Number Suffixes	Applicable VA Sizes
SPFG1	AR, QR, PR, KHR, SR	50 to 500
SPFG1	KHP, SP, NJ	50 to 1500
SPFG1	ACP, MQMJ	50 to 3000

Note: Each finger guard supplies either the primary or secondary side. Finger guard option not available on SP5000ACP and SP5000MQMJ standard units. Add 0.38" per finger guard to overall depth (column B) on units from 50 VA to 500 VA and 0.31" to units from 750 VA to 2000 VA when finger guard has been installed. For custom units, optional finger guards are only available on units up to 3000VA or 30 amps.

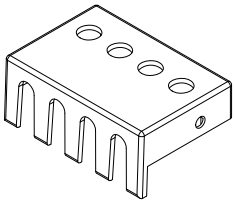

Finger Guard
(Optional)

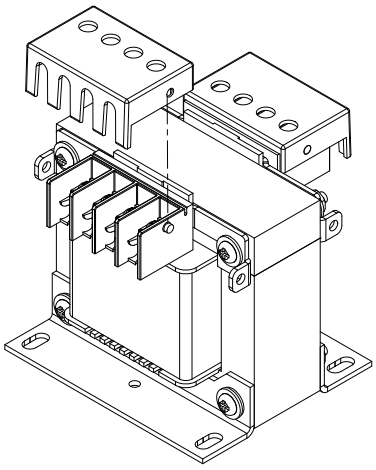

Sample Assembly Drawing for Optional Finger Guard Installation
(Only available for units supplied with either a primary or secondary molded terminal block)

Fuse Block Adapter Kit

HPS Spartan industrial control transformers up to and including 3000VA or 30 amps are available with optional fuse block adapter kits. The Fuse Block Adapter Kit is designed to allow for the installation of any third party after market fuse block assembly onto the industrial control transformer. The transformer must be a unit that incorporates a molded terminal block on either the primary or secondary side.

Note: HPS does not provide any jumpers or appropriate fuses for any after market fuse block you install on the HPS Spartan industrial control transformer. The HPS fuse block adapter kit provides only the mechanical means of attaching a third party after market fuse block. HPS does not recommend any specific fuse block or fuse supplier. For a recommended size of fuse, please see page # 32.

Kit Part Number	Applicable Transformer Part Number Suffixes	Applicable VA Sizes
SPFBAK1	AR, QR, PR, KHR, SR	50 to 500
SPFBAK1	KHP, SP, NJ	50 to 1500
SPFBAK1	ACP, MQMJ	50 to 3000

Note: Only 1 fuse block adapter kit is required per transformer. Fuse block adapter kit not available on SP5000ACP and SP5000MQMJ standard units. Add 0.38" per fuse block adapter to overall depth (column B) on units from 750 VA to 3000 VA when optional fuse block adapter is installed. For custom units, optional fuse block adapter kit is only available on units up to 3000VA or 30 amps.

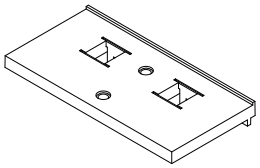

Fuse Block Adapter Kit
(Optional)

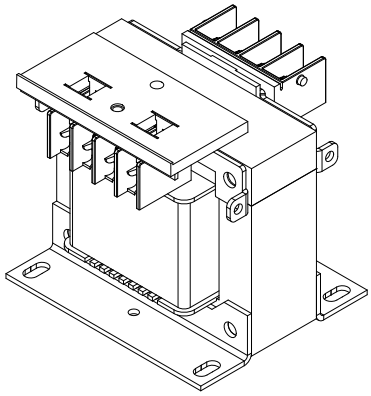

Sample Assembly Drawing for Optional Fuse Block Adapter Installation

For detailed installation instructions of HPS Spartan transformers or the optional finger guards and fuse block adapter kits, please visit our website under Products - Product Links - Instruction Sheets.
Or go to the following link: http://www.hammondpowersolutions.com/resources/instruction-sheets/

© Hammond Power Solutions Inc.

Data subject to change without notice.

HPS Fusion™ General Purpose Enclosed Transformer

The Ideal Solution

The HPS Fusion™ line of single phase, general purpose enclosed transformers are ideally suited for general purpose, industrial and light duty loads. They have been designed for indoor applications and offer an efficient and economical solution. These units are well suited for HVAC applications, signal and alarm systems, motor control circuits, lighting and circuit isolation.

The HPS Fusion control transformer is an enclosed style unit with either molded terminal blocks (on units up to 3000 VA or 30 amps) or coil face termination. Optional Finger guards and a fuse block adapter kit are available upon request.

For an economical approach to general purpose loads, the HPS Fusion is the transformer of choice.

STANDARDS

The HPS Fusion Control Transformers meet or exceed the standards established by UL, CSA, IEC and NEMA.

Standard	File #	VA Size
UL (ANSI/UL506)	E50394	All
CSA	LR3902	All
IEC 61558		All
NEMA (ST-1)		All

© Hammond Power Solutions Inc.

Data subject to change without notice.

Features and Benefits

- Molded terminal blocks for primary and secondary connections up to 3000 VA or 30 amps; coil face termination over 3000VA or 30 amps
- All terminal blocks utilize a combination slot/Phillips #6 screw with a SEMS washer (suitable for 18 AWG to 14 AWG for solid wire and 18 AWG to 12 AWG for stranded wire). Coil face terminations utilize a ¼ - 20 UNC X 0.50" combination slot/Phillips screw and a spring lock washer
- Vacuum Impregnated with Polyester Resin and oven cured
- Bolted core construction
- Bolt-on mounting brackets
- Coils with high dielectric strength insulation
- Seismically certified in accordance with IBC 2009; Section 1613 Earthquake Loads, for S_{DS} <= 2.00g , z/h = 1.0, and I_P = 1.5
- CSA Certified, UL Listed, CE Marked and RoHS compliant
- Meets NEMA standards
- Superior insulating materials. The HPS Fusion series transformers offer the following insulation systems:

	Up to 1500 VA:	95°C temperature rise, 130°C insulation class (B)
	2000 VA to 5000 VA:	130°C temperature rise, 180°C insulation class (F)
	(Note: Temperature rise based on 25°C ambient)	

- 50/60 Hz (60 Hz on FS***ACP and FS***AR)
- Rugged NEMA 1 enclosure
- Finish - forest green powder coat
- Primary and secondary ground screw
- Four (0.88") wiring knockouts and four (0.50") accessory knockouts
- Optional panel mount fuse holder available
- Easy mounting and installation via four mounting slots and two keyhole slots
- Easy access to primary and secondary wiring compartments through removable covers
- 15 year warranty

© Hammond Power Solutions Inc.

Data subject to change without notice.

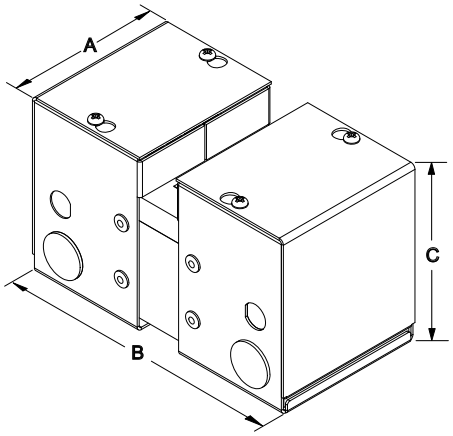

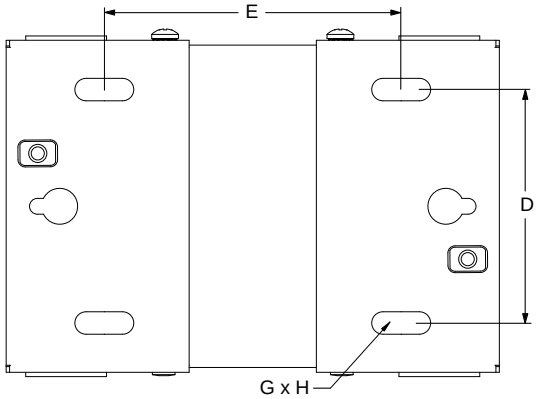

Group A

Primary Voltage: 600/480 || 575/460 || 550/440
Secondary Voltage: 120 X 240 || 115 X 230 || 110 X 220

60 Hertz

VA Rating	CE VA Rating	Catalog Number	Output Amps	Overall Dimensions			Mounting Centers		Mounting Slot	Approx. Ship Weight Lbs.
				A	B	C	D	E	G X H	
50	50	**FS50ACP**	0.42/0.21	2.7	6.4	3.33	1.66	4.16	0.22 x 0.44	3.0
100	100	**FS100ACP**	0.83/0.42	3.09	6.3	3.6	2.05	3.5	0.22 x 0.44	4.2
150	150	**FS150ACP**	1.25/0.63	3.09	6.9	3.6	2.05	4.1	0.22 x 0.44	5.3
250	160	**FS250ACP**	2.08/1.04	3.9	6.6	4.3	2.52	3.9	0.22 x 0.44	7.6
350	250	**FS350ACP**	2.92/1.46	3.9	7	4.3	2.52	4.3	0.22 x 0.44	8.7
500	300	**FS500ACP**	4.17/2.08	4.6	7.2	4.6	3.3	4.5	0.31 x 0.81	13.3
750	500	**FS750ACP**	6.25/3.13	5.6	7.6	5.1	4	4.9	0.31 x 0.81	20.3
1000	650	**FS1000ACP**	8.33/4.17	5.6	8	5.1	4	5.3	0.31 x 0.81	22.9
1500	1000	**FS1500ACP**	12.5/6.25	5.6	9.4	5.1	4	6.7	0.31 x 0.81	30.3
2000	1300	**FS2000ACP**	16.7/8.33	6.6	9.1	6	5.1	5.7	0.31 x 0.81	37.1
3000	2000	**FS3000ACP**	25.0/12.5	7.8	11.3	6.7	6.3	6.9	0.31 x 0.81	64.0
5000	3000	**FS5000ACP**	41.7/20.8	9.3	14.9	8	7.1	7.3	0.31 x 0.81	99.7

Primary and Secondary voltage links/jumpers supplied standard with all transformers. **All dimensions in inches**
Refer to page 75 for wiring schematic drawing. Custom voltages and VA sizes available upon request.

Group B

Primary Voltage: 600 || 575 || 550
Secondary Voltage: 12 X 24 || 11.5 X 23 || 11 X 22

60 Hertz

VA Rating	CE VA Rating	Catalog Number	Output Amps	Overall Dimensions			Mounting Centers		Mounting Slot	Approx. Ship Weight Lbs.
				A	B	C	D	E	G X H	
50	50	**FS50AR**	4.17/2.08	2.7	5.8	3.33	1.66	3.58	0.22 x 0.44	2.3
100	100	**FS100AR**	8.33/4.17	3.09	6.3	3.6	2.05	3.5	0.22 x 0.44	4.2
150	150	**FS150AR**	12.5/6.25	3.09	6.7	3.6	2.05	3.9	0.22 x 0.44	4.8
250	160	**FS250AR**	20.8/10.4	3.9	6.2	4.3	2.52	3.5	0.22 x 0.44	6.4
350	250	**FS350AR**	29.2/14.6	3.9	6.8	4.3	2.52	4.1	0.22 x 0.44	8.3
500	300	**FS500AR**	41.7/20.8	4.6	6.8	4.1	3.3	4.5	0.31 x 0.81	11.8

Primary and Secondary voltage links/jumpers supplied standard with all transformers. **All dimensions in inches**
Refer to page 75 for wiring schematic drawing. Custom voltages and VA sizes available upon request.

© Hammond Power Solutions Inc.

Data subject to change without notice.

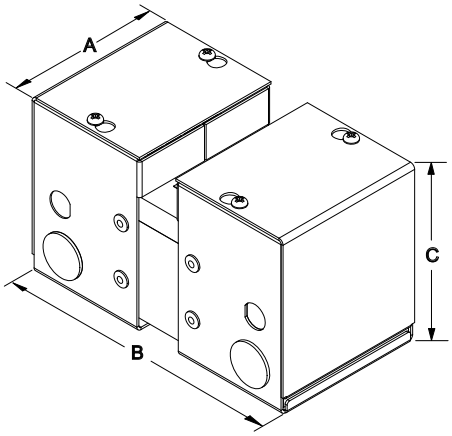

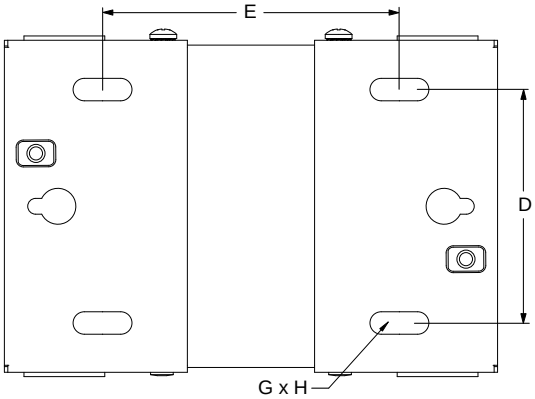

Group C

Primary Voltage: 240 X 480 ‖ 230 X 460 ‖ 220 X 440
Secondary Voltage: 120 X 240 ‖ 115 X 230 ‖ 110 X 220

50/60 Hertz

VA Rating	CE VA Rating	Catalog Number	Output Amps	Overall Dimensions			Mounting Centers		Mounting Slot	Approx. Ship Weight Lbs.
				A	B	C	D	E	G X H	
50	50	**FS50MQMJ**	0.42/0.21	2.7	5.9	3.33	1.66	3.69	0.22 x 0.44	2.5
100	100	**FS100MQMJ**	0.83/0.42	3.09	6.3	3.6	2.05	3.5	0.22 x 0.44	3.9
150	150	**FS150MQMJ**	1.25/0.63	3.09	6.9	3.6	2.05	4.1	0.22 x 0.44	5.2
250	160	**FS250MQMJ**	2.08/1.04	3.9	6.6	4.3	2.52	3.9	0.22 x 0.44	7.7
350	250	**FS350MQMJ**	2.92/1.46	3.9	7.2	4.3	2.52	4.9	0.22 x 0.44	9.4
500	300	**FS500MQMJ**	4.17/2.08	4.6	7.2	4.6	3.3	4.5	0.31 x 0.81	13.2
750	500	**FS750MQMJ**	6.25/3.13	5.6	7.2	5.1	4	4.5	0.31 x 0.81	18.0
1000	650	**FS1000MQMJ**	8.33/4.17	5.6	8	5.1	4	5.3	0.31 x 0.81	22.8
1500	1000	**FS1500MQMJ**	12.5/6.25	6.6	8.5	6	5.1	5.1	0.31 x 0.81	31.1
2000	1300	**FS2000MQMJ**	16.7/8.33	6.6	9.1	6	5.1	5.7	0.31 x 0.81	38.1
3000	2000	**FS3000MQMJ**	25.0/12.5	7.8	11.7	6.7	6.3	7.3	0.31 x 0.81	68.5
5000	3000	**FS5000MQMJ**	41.7/20.8	9.3	15.1	8	7.4	7.3	0.31 x 0.81	104.2

Primary and Secondary voltage links/jumpers supplied standard with all transformers.
Refer to page 76 for wiring schematic drawing. Custom voltages and VA sizes available upon request.

All dimensions in inches

Group D

Primary Voltage: 240 X 480 ‖ 230 X 460 ‖ 220 X 440
Secondary Voltage: 12 X 24 ‖ 11.5 X 23 ‖ 11 X 22

50/60 Hertz

VA Rating	CE VA Rating	Catalog Number	Output Amps	Overall Dimensions			Mounting Centers		Mounting Slot	Approx. Ship Weight Lbs.
				A	B	C	D	E	G X H	
50	50	**FS50QR**	4.17/2.08	2.7	5.9	3.33	1.66	3.69	0.22 x 0.44	2.5
100	100	**FS100QR**	8.33/4.17	3.09	6.1	3.6	2.05	3.35	0.22 x 0.44	3.9
150	150	**FS150QR**	12.5/6.25	3.09	6.9	3.6	2.05	4.1	0.22 x 0.44	5.2
250	160	**FS250QR**	20.8/10.4	3.9	6.6	4.3	2.52	3.9	0.22 x 0.44	7.7
350	250	**FS350QR**	29.2/14.6	3.9	7.2	4.3	2.52	4.9	0.22 x 0.44	9.5
500	300	**FS500QR**	41.7/20.8	4.6	7.2	4.6	3.3	4.5	0.31 x 0.81	13.4

Primary and Secondary voltage links/jumpers supplied standard with all transformers.
Refer to page 76 for wiring schematic drawing. Custom voltages and VA sizes available upon request.

All dimensions in inches

© Hammond Power Solutions Inc.
Data subject to change without notice.

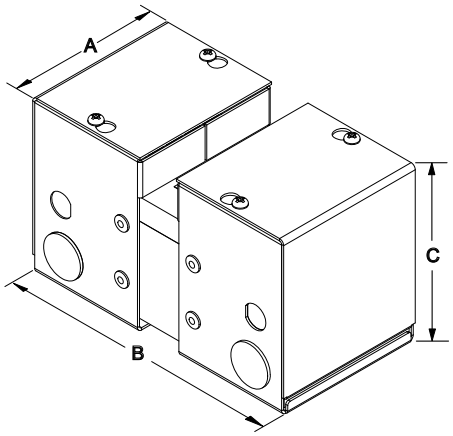

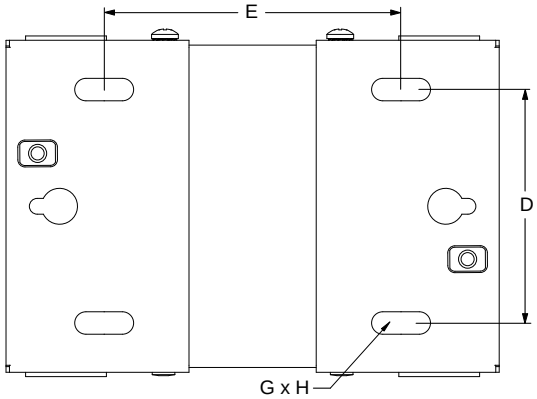

Group E

Primary Voltage: 380/347
Secondary Voltage: 120 X 240

50/60 Hertz

VA Rating	CE VA Rating	Catalog Number	Output Amps	Overall Dimensions			Mounting Centers		Mounting Slot	Approx. Ship Weight Lbs.
				A	B	C	D	E	G X H	
50	50	**FS50KHP**	0.42/0.21	2.7	5.9	3.33	1.66	3.69	0.22 x 0.44	2.5
100	100	**FS100KHP**	0.83/0.42	3.09	6.3	3.6	2.05	3.5	0.22 x 0.44	4.3
150	150	**FS150KHP**	1.25/0.63	3.09	6.9	3.6	2.05	4.1	0.22 x 0.44	5.3
250	160	**FS250KHP**	2.08/1.04	3.9	6.6	4.3	2.52	3.9	0.22 x 0.44	7.9
350	250	**FS350KHP**	2.92/1.46	3.9	7.2	4.3	2.52	4.9	0.22 x 0.44	9.6
500	300	**FS500KHP**	4.17/2.08	4.6	7.2	4.6	3.3	4.5	0.31 x 0.81	13.6
750	500	**FS750KHP**	6.25/3.13	5.6	7.2	5.1	4	4.5	0.31 x 0.81	19
1000	650	**FS1000KHP**	8.33/4.17	5.6	8	5.1	4	5.3	0.31 x 0.81	23.5
1500	1000	**FS1500KHP**	12.5/6.25	6.6	8.5	6	5.1	5.1	0.31 x 0.81	31.6

Primary and Secondary voltage links/jumpers supplied standard with all transformers.
Refer to page 77 for wiring schematic drawing. Custom voltages and VA sizes available upon request.

All dimensions in inches

Group F

Primary Voltage: 380/347
Secondary Voltage: 12 X 24

50/60 Hertz

VA Rating	CE VA Rating	Catalog Number	Output Amps	Overall Dimensions			Mounting Centers		Mounting Slot	Approx. Ship Weight Lbs.
				A	B	C	D	E	G X H	
50	50	**FS50KHR**	4.17/2.08	2.7	5.9	3.33	1.66	3.69	0.22 x 0.44	2.5
100	100	**FS100KHR**	8.33/4.17	3.09	6.3	3.6	2.05	3.5	0.22 x 0.44	4.2
150	150	**FS150KHR**	12.5/6.25	3.09	6.9	3.6	2.05	4.1	0.22 x 0.44	5.3
250	160	**FS250KHR**	20.8/10.4	3.9	6.6	4.3	2.52	3.9	0.22 x 0.44	7.6
350	250	**FS350KHR**	29.2/14.6	3.9	7.2	4.3	2.52	4.9	0.22 x 0.44	9.3
500	300	**FS500KHR**	41.7/20.8	4.6	7.2	4.6	3.3	4.5	0.31 x 0.81	13.2

Primary and Secondary voltage links/jumpers supplied standard with all transformers.
Refer to page 77 for wiring schematic drawing. Custom voltages and VA sizes available upon request.

All dimensions in inches

© Hammond Power Solutions Inc.

Data subject to change without notice.

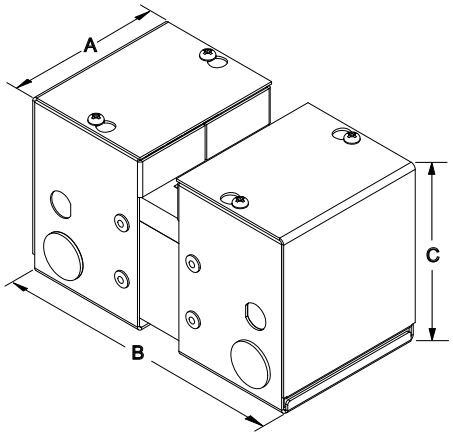

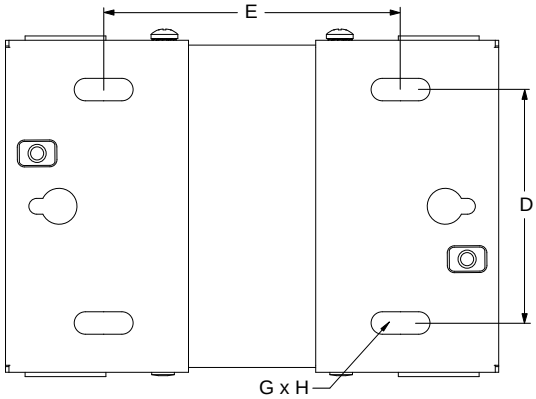

Group G

Primary Voltage: 277
Secondary Voltage: 120

50/60 Hertz

VA Rating	CE VA Rating	Catalog Number	Output Amps	Overall Dimensions			Mounting Centers		Mounting Slot	Approx. Ship Weight Lbs.
				A	B	C	D	E	G X H	
50	50	**FS50NJ**	0.42	2.7	5.9	3.33	1.66	3.69	0.22 x 0.44	2.4
100	100	**FS100NJ**	0.83	3.09	6.1	3.6	2.05	3.35	0.22 x 0.44	4.1
150	150	**FS150NJ**	1.25	3.09	6.9	3.6	2.05	4.1	0.22 x 0.44	5.2
250	160	**FS250NJ**	2.08	3.9	6.6	4.3	2.52	3.9	0.22 x 0.44	7.6
350	250	**FS350NJ**	2.92	3.9	7.2	4.3	2.52	4.9	0.22 x 0.44	9.3
500	300	**FS500NJ**	4.17	4.6	7.2	4.6	3.3	4.5	0.31 x 0.81	13.3
750	500	**FS750NJ**	6.25	5.6	7.6	5.1	4	4.9	0.31 x 0.81	20.1
1000	650	**FS1000NJ**	8.33	5.6	8	5.1	4	5.3	0.31 x 0.81	22.8
1500	1000	**FS1500NJ**	12.50	5.6	9.4	5.1	4	6.7	0.31 x 0.81	31.1

Primary and Secondary voltage links/jumpers supplied standard with all transformers. **All dimensions in inches**
Refer to page 78 for wiring schematic drawing. Custom voltages and VA sizes available upon request.

Group H

Primary Voltage: 120 X 240 | 115 X 230 | 110 X 220
Secondary Voltage: 12 X 24 | 11.5 X 23 | 11 X 22

50/60 Hertz

VA Rating	CE VA Rating	Catalog Number	Output Amps	Overall Dimensions			Mounting Centers		Mounting Slot	Approx. Ship Weight Lbs.
				A	B	C	D	E	G X H	
50	50	**FS50PR**	4.17/2.08	2.7	5.9	3.33	1.66	3.69	0.22 x 0.44	2.5
100	100	**FS100PR**	8.33/4.17	3.09	6.1	3.6	2.05	3.35	0.22 x 0.44	3.9
150	150	**FS150PR**	12.5/6.25	3.09	6.9	3.6	2.05	4.1	0.22 x 0.44	5.2
250	160	**FS250PR**	20.8/10.4	3.9	6.4	4.3	2.52	3.7	0.22 x 0.44	7.1
350	250	**FS350PR**	29.2/14.6	3.9	7.2	4.3	2.52	4.9	0.22 x 0.44	9.4
500	300	**FS500PR**	41.7/20.8	4.6	7.2	4.6	3.3	4.5	0.31 x 0.81	13.2

Primary and Secondary voltage links/jumpers supplied standard with all transformers. **All dimensions in inches**
Refer to page 78 for wiring schematic drawing. Custom voltages and VA sizes available upon request.

© Hammond Power Solutions Inc.
Data subject to change without notice.

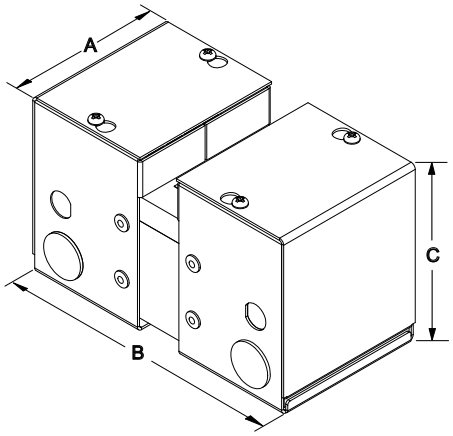

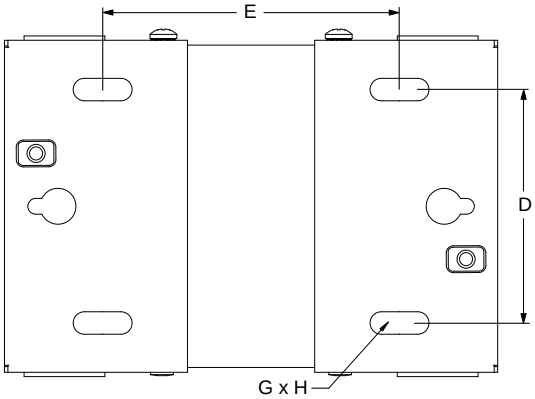

Group I

Primary Voltage: 208 X 416 || 200 X 400 || 190 X 380
Secondary Voltage: 120 X 240 || 115 X 230 || 110 X 220
50/60 Hertz

VA Rating	CE VA Rating	Catalog Number	Output Amps	Overall Dimensions			Mounting Centers		Mounting Slot	Approx. Ship Weight Lbs.
				A	B	C	D	E	G X H	
50	50	**FS50SP**	0.42/0.21	2.7	5.9	3.33	1.66	3.69	0.22 x 0.44	2.4
100	100	**FS100SP**	0.83/0.42	3.09	6.1	3.6	2.05	3.35	0.22 x 0.44	3.9
150	150	**FS150SP**	1.25/0.63	3.09	6.9	3.6	2.05	4.1	0.22 x 0.44	5.2
250	160	**FS250SP**	2.08/1.04	3.9	6.6	4.3	2.52	3.9	0.22 x 0.44	7.7
350	250	**FS350SP**	2.92/1.46	3.9	7.2	4.3	2.52	4.9	0.22 x 0.44	9.5
500	300	**FS500SP**	4.17/2.08	4.6	7.2	4.6	3.3	4.5	0.31 x 0.81	13.3
750	500	**FS750SP**	6.25/3.13	5.6	7.2	5.1	4	4.5	0.31 x 0.81	18.2
1000	650	**FS1000SP**	8.33/4.17	5.6	8	5.1	4	5.3	0.31 x 0.81	22.5
1500	1000	**FS1500SP**	12.5/6.25	6.6	8.5	6	5.1	5.1	0.31 x 0.81	30.1

Primary and Secondary voltage links/jumpers supplied standard with all transformers. **All dimensions in inches**
Refer to page 79 for wiring schematic drawing. Custom voltages and VA sizes available upon request.

Group J

Primary Voltage: 208 X 416 || 200 X 400 || 190 X 380
Secondary Voltage: 12 X 24 || 11.5 X 23 || 11 X 22
50/60 Hertz

VA Rating	CE VA Rating	Catalog Number	Output Amps	Overall Dimensions			Mounting Centers		Mounting Slot	Approx. Ship Weight Lbs.
				A	B	C	D	E	G X H	
50	50	**FS50SR**	4.17/2.08	2.7	5.9	3.33	1.66	3.69	0.22 x 0.44	2.4
100	100	**FS100SR**	8.33/4.17	3.09	6.1	3.6	2.05	3.35	0.22 x 0.44	4
150	150	**FS150SR**	12.5/6.25	3.09	6.9	3.6	2.05	4.1	0.22 x 0.44	5.2
250	160	**FS250SR**	20.8/10.4	3.9	6.6	4.3	2.52	3.9	0.22 x 0.44	7.7
350	250	**FS350SR**	29.2/14.6	3.9	7.2	4.3	2.52	4.9	0.22 x 0.44	9.5
500	300	**FS500SR**	41.7/20.8	4.6	7.2	4.6	3.3	4.5	0.31 x 0.81	13.3

Primary and Secondary voltage links/jumpers supplied standard with all transformers. **All dimensions in inches**
Refer to page 79 for wiring schematic drawing. Custom voltages and VA sizes available upon request.

© Hammond Power Solutions Inc.

Data subject to change without notice.

Optional Accessories

Fuse Holder Kit

This general purpose enclosed transformer optional secondary fuse holder kit is specifically designed to provide circuit protection up to a maximum of 20 amps and up to 250V. The fuse holder kit is supplied with leads for easy hook-up and is easy to install. Fuses are NOT supplied with this kit. Fuses should be selected in accordance with CSA, UL and local electrical codes.

Part Number	Applicable Transformer Part Number Suffixes	Applicable Specifications
FSFH1	All	Up to 20 amps and 250V Designed to accept ¼" x 1 ¼" fuse sizes

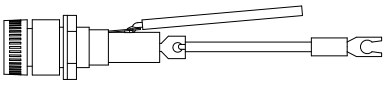

Fuse Kit
(Optional)

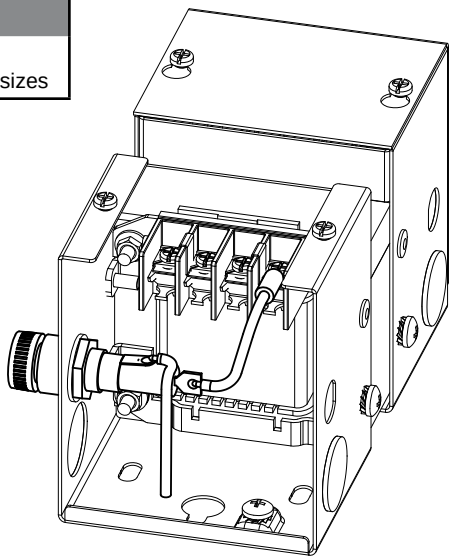

Sample Assembly Drawing for Optional Fuse Kit Installation
(Only available for units supplied with either a primary or secondary molded terminal block)

For detailed installation instructions of HPS Fusion transformers or the optional fuse kits, please visit our website under Products - Product Links - Instruction Sheets.
Or go to the following link: http://www.hammondpowersolutions.com/resources/instruction-sheets/

© Hammond Power Solutions Inc.
Data subject to change without notice.

SINGLE PHASE ENCLOSED ENCAPSULATED CONTROL TRANSFORMER FEATURES

For applications where a cost effective approach to general purpose loads indoor or outdoor is required, consider the 'Q' series, single phase encapsulated control transformer. These units are specifically designed for the following applications;

- General purpose enclosed control applications used to adjust a supply voltage to match a load requirement.
- Supplying machine tool circuits.
- Actuating relays, bells, signal and alarm systems.
- Operating small motors, valves and dampers.
- Industrial lighting and circuit isolation.

50 to 5000VA

SINGLE PHASE ENCLOSED ENCAPSULATED CONTROL STANDARD SPECIFICATIONS

	50 to 5000VA	Benefits
UL Listed	File: E50394	
CSA Certified	File: LR3902	
Frequency	60 Hertz	
Insulation System	Up to 1kVA; Class B, 80°C temperature rise. 1.5 to 5kVA; Class F, 115°C temperature rise.	Assures long life and reliable performance.
Standard Design	Single Phase, all welded core construction made with high quality, high permeability silicon steel laminations.	Rugged one-piece assembly with low noise provides optimum performance and reliability.
	Computer designed coils, accurately wound with optimum mean turns made from high quality magnetic wire with insulation film.	Provides enhanced voltage regulation, excellent thermal characteristics and compliments modern winding techniques.
Encapsulation	All units from 50VA to 5kVA are encapsulated with electrical grade silica sand and resin compounds.	Completely encloses the core and coil to seal out moisture, airborne contaminants and eliminates corrosion & insulation deterioration.
Enclosure Type	Heavy Duty NEMA Type 3R (conduit knockouts on sides and rear)	Meets the heavy industrial trade requirements for indoor/outdoor enclosed transformers.
Termination	Front accessible wiring compartment with high and low voltage copper lead wires or tabs.	Ample space for transformer connection for primary and secondary terminations.
Mounting	Designed for vertical or horizontal mounting.	Facilitates any installation requirement.

© Hammond Power Solutions Inc.

Data subject to change without notice.

SINGLE PHASE, NEMA 3R STYLE ENCLOSURE

600 Primary Volts **12/24 Secondary Volts** **60 Hz**

VA Rating	Catalog Number	Case Style (Page 262)	Approx. Dimensions (Inches)			Approx. Weight (Lbs.)	Mtg Type W - Wall	Wiring Diagram (Page 277)
			Width	Depth	Height			
50	**QC05PRCB**	NQ0	3.75	5.25	7.25	6	W	SCD 4
100	**QC10PRCB**	NQ0	3.75	5.25	7.25	7	W	SCD 4
150	**QC15PRCB**	NQ0	3.75	5.25	7.25	8	W	SCD 4
200	**QC20PRCB**	NQ1	4.50	5.75	7.25	11	W	SCD 4
250	**QC25PRCB**	NQ1	4.50	5.75	7.25	13	W	SCD 4
350	**QC35PRCB**	NQ1	4.50	5.75	7.25	14	W	SCD 4
500	**QC50PRCB**	NQ2	5.00	4.75	9.25	15	W	SCD 4
750	**QC75PRCB**	NQ2	5.00	4.75	9.25	18	W	SCD 4
1000	**Q1C0PRCB**	NQ3	5.88	5.50	10.50	25	W	SCD 4
1500	**Q1C5PRCF**	NQ4	7.00	6.50	11.75	36	W	SCD 4
2000	**Q002PRCF**	NQ4	7.00	6.50	11.75	46	W	SCD 4
3000	**Q003PRCF**	NQ4	7.00	6.50	11.75	65	W	SCD 4
5000	**Q005PRCF**	NQ5	10.00	7.75	17.25	105	W	SCD 4

© Hammond Power Solutions Inc.

Data subject to change without notice.

HPS IMPERATOR - Wiring Schematic Drawings

Group A

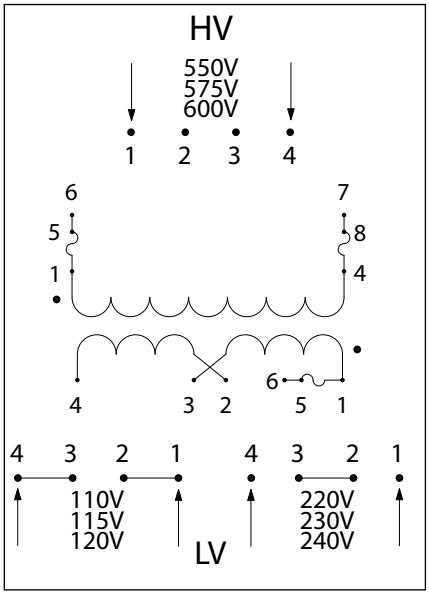

PH***AJ Schematic for 50, 75 and 100VA Units

High Voltage (HV) (Primary Volts)	Install Supplied Jumpers/ Links Between Terminals	Supply Lines Connect To	Install Fuse Clips To
600 575 550	None	1, 4	Unfused
600 575 550	None	6, 7	1-5, 4-8

Low Voltage (LV) (Secondary Volts)	Install Supplied Links Between Terminals	Load Lines Connect To	Install Fuse Clips To
120 115 110	3-4, 1-2	1, 4	Unfused
240 230 220	2-3	1, 4	Unfused
120 115 110	3-4, 1-2	4, 6	1-5
240 230 220	2-3	4, 6	1-5

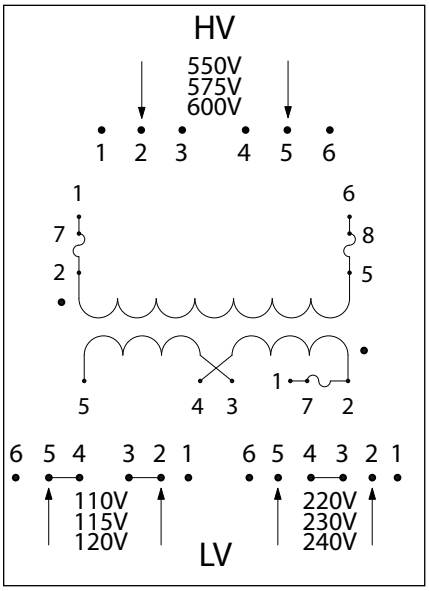

PH***AJ Schematic for 150VA to 1500VA Units

High Voltage (HV) (Primary Volts)	Install Supplied Jumpers/ Links Between Terminals	Supply Lines Connect To	Install Fuse Clips To
600 575 550	None	2, 5	Unfused
600 575 550	None	1, 6	2-7, 5-8

Low Voltage (LV) (Secondary Volts)	Install Supplied Links Between Terminals	Load Lines Connect To	Install Fuse Clips To
120 115 110	4-5, 2-3	2, 5	Unfused
240 230 220	3-4	2, 5	Unfused
120 115 110	4-5, 2-3	1, 5	2-7
240 230 220	3-4	1, 5	2-7

© Hammond Power Solutions Inc.

Data subject to change without notice.

***HPS IMPERATOR* - Wiring Schematic Drawings continued**

Group B

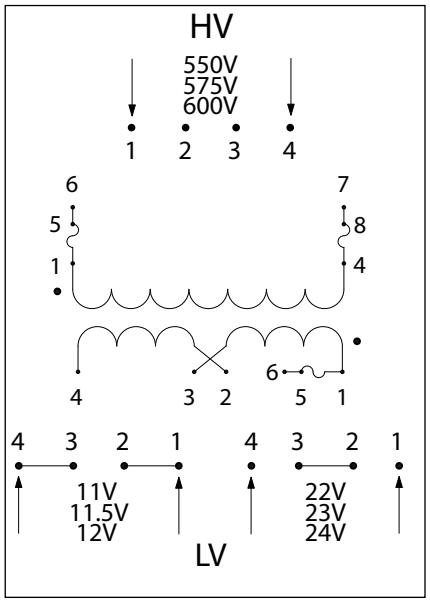

PH***AR Schematic for 50, 75 and 100VA Units

High Voltage (HV) (Primary Volts)	Install Supplied Jumpers/ Links Between Terminals	Supply Lines Connect To	Install Fuse Clips To
600 575 550	None	1, 4	Unfused
600 575 550	None	6, 7	1-5, 4-8

Low Voltage (LV) (Secondary Volts)	Install Supplied Links Between Terminals	Load Lines Connect To	Install Fuse Clips To
12 11.5 11	3-4, 1-2	1, 4	Unfused
24 23 22	2-3	1, 4	Unfused
12 11.5 11	3-4, 1-2	4, 6	1-5
24 23 22	2-3	4, 6	1-5

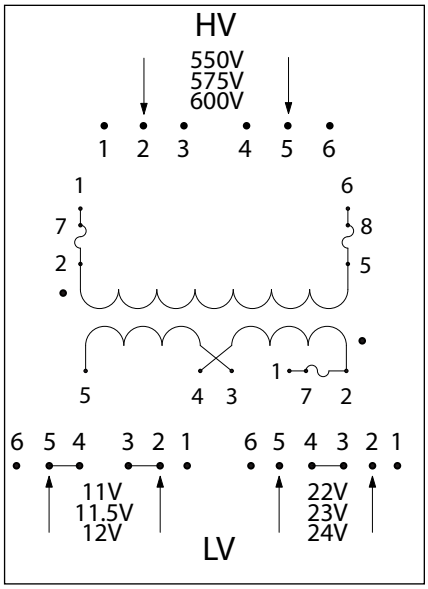

PH***AR Schematic for 150VA to 500VA Units

High Voltage (HV) (Primary Volts)	Install Supplied Jumpers/ Links Between Terminals	Supply Lines Connect To	Install Fuse Clips To
600 575 550	None	2, 5	Unfused
600 575 550	None	1, 6	2-7, 5-8

Low Voltage (LV) (Secondary Volts)	Install Supplied Links Between Terminals	Load Lines Connect To	Install Fuse Clips To
12 11.5 11	4-5, 2-3	2, 5	Unfused
24 23 22	3-4	2, 5	Unfused
12 11.5 11	4-5, 2-3	1, 5	2-7
24 23 22	3-4	1, 5	2-7

© Hammond Power Solutions Inc.
Data subject to change without notice.

***HPS IMPERATOR* - Wiring Schematic Drawings continued**

Group C

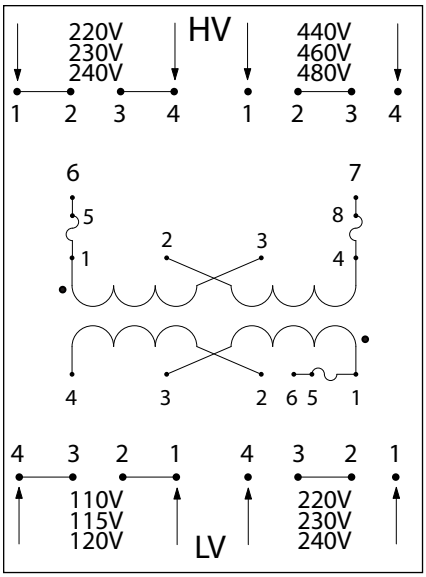

PH***MQMJ Schematic for 50, 75 and 100VA Units

High Voltage (HV) (Primary Volts)	Install Supplied Links Between Terminals	Supply Lines Connect To	Install Fuse Clips To
240 230 220	1-2, 3-4	1, 4	Unfused
480 460 440	2-3	1, 4	Unfused
240 230 220	1-2, 3-4	6, 7	1-5, 4-8
480 460 440	2-3	6, 7	1-5, 4-8

Low Voltage (LV) (Secondary Volts)	Install Supplied Links Between Terminals	Load Lines Connect To	Install Fuse Clips To
120 115 110	3-4, 1-2	1, 4	Unfused
240 230 220	2-3	1, 4	Unfused
120 115 110	3-4, 1-2	4, 6	1-5
240 230 220	2-3	4, 6	1-5

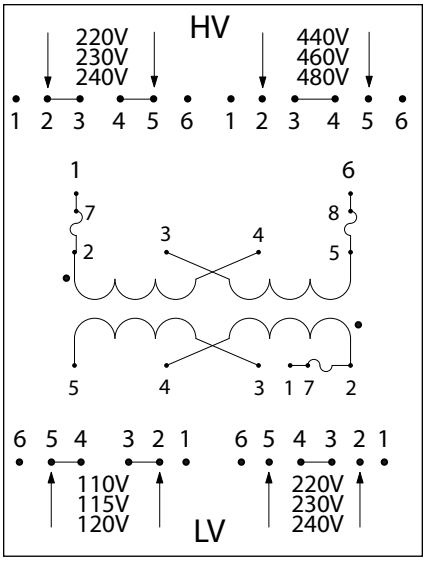

PH***MQMJ Schematic for 150VA to 1500VA Units

High Voltage (HV) (Primary Volts)	Install Supplied Links Between Terminals	Supply Lines Connect To	Install Fuse Clips To
240 230 220	2-3, 4-5	2, 5	Unfused
480 460 440	3-4	2, 5	Unfused
240 230 220	2-3, 4-5	1, 6	2-7, 5-8
480 460 440	3-4	1, 6	2-7, 5-8

Low Voltage (LV) (Secondary Volts)	Install Supplied Links Between Terminals	Load Lines Connect To	Install Fuse Clips To
120 115 110	4-5, 2-3	2, 5	Unfused
240 230 220	3-4	2, 5	Unfused
120 115 110	4-5, 2-3	1, 5	2-7
240 230 220	3-4	1, 5	2-7

© Hammond Power Solutions Inc.

Data subject to change without notice.

***HPS IMPERATOR* - Wiring Schematic Drawings continued**

Group D

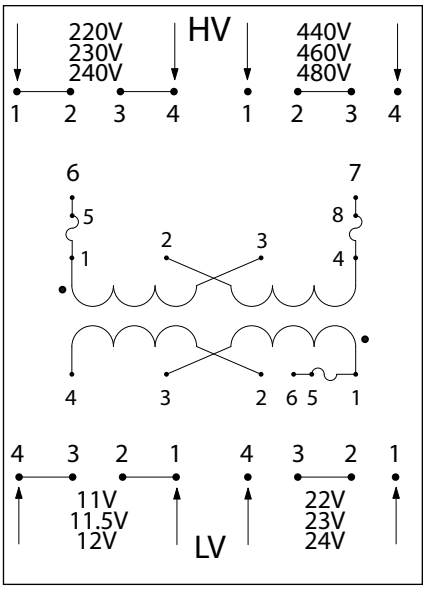

PH***QR Schematic for 50, 75 and 100VA Units

High Voltage (HV) (Primary Volts)	Install Supplied Links Between Terminals	Supply Lines Connect To	Install Fuse Clips To
240 230 220	1-2, 3-4	1, 4	Unfused
480 460 440	2-3	1, 4	Unfused
240 230 220	1-2, 3-4	6, 7	1-5, 4-8
480 460 440	2-3	6, 7	1-5, 4-8

Low Voltage (LV) (Secondary Volts)	Install Supplied Links Between Terminals	Load Lines Connect To	Install Fuse Clips To
12 11.5 11	3-4, 1-2	1, 4	Unfused
24 23 22	2-3	1, 4	Unfused
12 11.5 11	3-4, 1-2	4, 6	1-5
24 23 22	2-3	4, 6	1-5

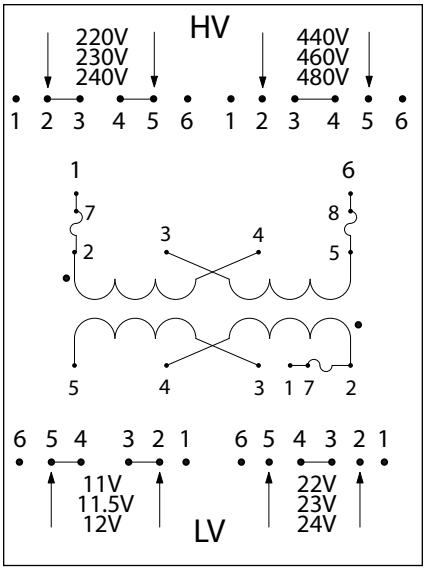

PH***QR Schematic for 150VA to 500VA Units

High Voltage (HV) (Primary Volts)	Install Supplied Links Between Terminals	Supply Lines Connect To	Install Fuse Clips To
240 230 220	2-3, 4-5	2, 5	Unfused
480 460 440	3-4	2, 5	Unfused
240 230 220	2-3, 4-5	1, 6	2-7, 5-8
480 460 440	3-4	1, 6	2-7, 5-8

Low Voltage (LV) (Secondary Volts)	Install Supplied Links Between Terminals	Load Lines Connect To	Install Fuse Clips To
12 11.5 11	4-5, 2-3	2, 5	Unfused
24 23 22	3-4	2, 5	Unfused
12 11.5 11	4-5, 2-3	1, 5	2-7
24 23 22	3-4	1, 5	2-7

© Hammond Power Solutions Inc.
Data subject to change without notice.

***HPS IMPERATOR* - Wiring Schematic Drawings continued**

Group E

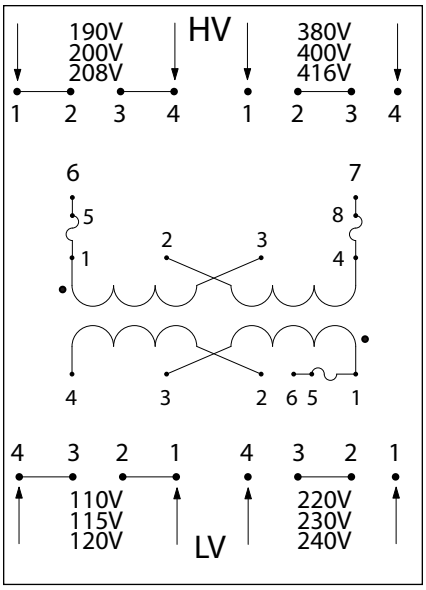

PH***SP Schematic for 50, 75 and 100VA Units

High Voltage (HV) (Primary Volts)	Install Supplied Links Between Terminals	Supply Lines Connect To	Install Fuse Clips To
208 200 190	1-2, 3-4	1, 4	Unfused
416 400 380	2-3	1, 4	Unfused
208 200 190	1-2, 3-4	6, 7	1-5, 4-8
416 400 380	2-3	6, 7	1-5, 4-8

Low Voltage (LV) (Secondary Volts)	Install Supplied Links Between Terminals	Load Lines Connect To	Install Fuse Clips To
120 115 110	3-4, 1-2	1, 4	Unfused
240 230 220	2-3	1, 4	Unfused
120 115 110	3-4, 1-2	4, 6	1-5
240 230 220	2-3	4, 6	1-5

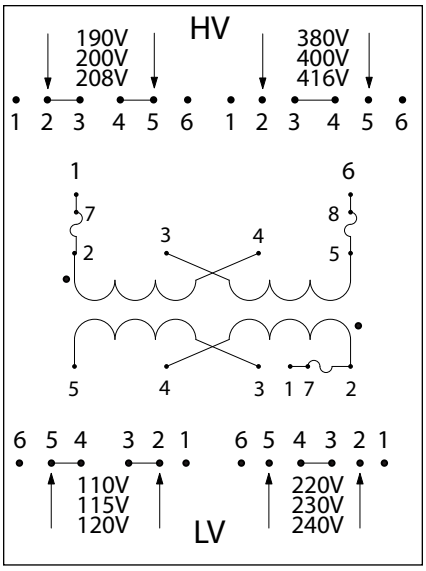

PH***SP Schematic for 150VA to 1000VA Units

High Voltage (HV) (Primary Volts)	Install Supplied Links Between Terminals	Supply Lines Connect To	Install Fuse Clips To
208 200 190	2-3, 4-5	2, 5	Unfused
416 400 380	3-4	2, 5	Unfused
208 200 190	2-3, 4-5	1, 6	2-7, 5-8
416 400 380	3-4	1, 6	2-7, 5-8

Low Voltage (LV) (Secondary Volts)	Install Supplied Links Between Terminals	Load Lines Connect To	Install Fuse Clips To
120 115 110	4-5, 2-3	2, 5	Unfused
240 230 220	3-4	2, 5	Unfused
120 115 110	4-5, 2-3	1, 5	2-7
240 230 220	3-4	1, 5	2-7

© Hammond Power Solutions Inc.

Data subject to change without notice.

***HPS IMPERATOR* - Wiring Schematic Drawings continued**

Group F

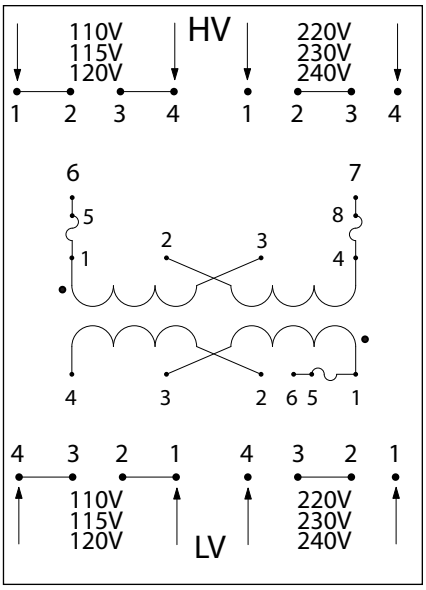

PH***PP Schematic for 50, 75 and 100VA Units

High Voltage (HV) (Primary Volts)	Install Supplied Links Between Terminals	Supply Lines Connect To	Install Fuse Clips To
120 115 110	1-2, 3-4	1, 4	Unfused
240 230 220	2-3	1, 4	Unfused
120 115 110	1-2, 3-4	6, 7	1-5, 4-8
240 230 220	2-3	6, 7	1-5, 4-8

Low Voltage (LV) (Secondary Volts)	Install Supplied Links Between Terminals	Load Lines Connect To	Install Fuse Clips To
120 115 110	3-4, 1-2	1, 4	Unfused
240 230 220	2-3	1, 4	Unfused
120 115 110	3-4, 1-2	4, 6	1-5
240 230 220	2-3	4, 6	1-5

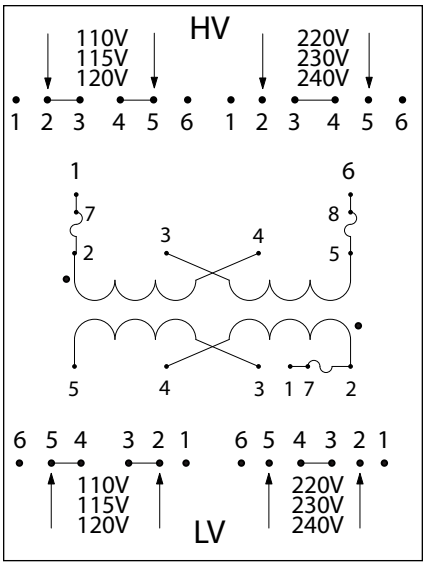

PH***PP Schematic for 150VA to 1500VA Units

High Voltage (HV) (Primary Volts)	Install Supplied Links Between Terminals	Supply Lines Connect To	Install Fuse Clips To
120 115 110	2-3, 4-5	2, 5	Unfused
240 230 220	3-4	2, 5	Unfused
120 115 110	2-3, 4-5	1, 6	2-7, 5-8
240 230 220	3-4	1, 6	2-7, 5-8

Low Voltage (LV) (Secondary Volts)	Install Supplied Links Between Terminals	Load Lines Connect To	Install Fuse Clips To
120 115 110	4-5, 2-3	2, 5	Unfused
240 230 220	3-4	2, 5	Unfused
120 115 110	4-5, 2-3	1, 5	2-7
240 230 220	3-4	1, 5	2-7

© Hammond Power Solutions Inc.
Data subject to change without notice.

HPS IMPERATOR - Wiring Schematic Drawings continued

Group G

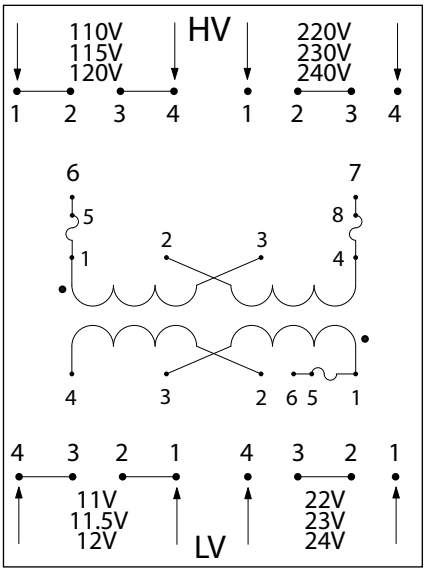

PH***PG Schematic for 50, 75 and 100VA Units

High Voltage (HV) (Primary Volts)			Install Supplied Links Between Terminals	Supply Lines Connect To	Install Fuse Clips To
120	115	110	1-2, 3-4	1, 4	Unfused
240	230	220	2-3	1, 4	Unfused
120	115	110	1-2, 3-4	6, 7	1-5, 4-8
240	230	220	2-3	6, 7	1-5, 4-8

Low Voltage (LV) (Secondary Volts)			Install Supplied Links Between Terminals	Load Lines Connect To	Install Fuse Clips To
12	11.5	11	3-4, 1-2	1, 4	Unfused
24	23	22	2-3	1, 4	Unfused
12	11.5	11	3-4, 1-2	4, 6	1-5
24	23	22	2-3	4, 6	1-5

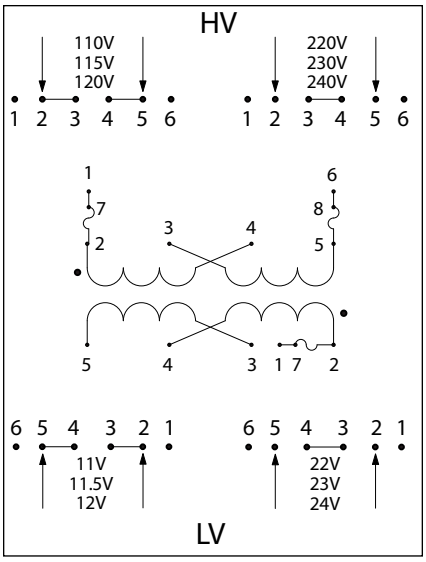

PH***PG Schematic for 150VA to 500VA Units

High Voltage (HV) (Primary Volts)			Install Supplied Links Between Terminals	Supply Lines Connect To	Install Fuse Clips To
120	115	110	2-3, 4-5	2, 5	Unfused
240	230	220	3-4	2, 5	Unfused
120	115	110	2-3, 4-5	1, 6	2-7, 5-8
240	230	220	3-4	1, 6	2-7, 5-8

Low Voltage (LV) (Secondary Volts)			Install Supplied Links Between Terminals	Load Lines Connect To	Install Fuse Clips To
12	11.5	11	4-5, 2-3	2, 5	Unfused
24	23	22	3-4	2, 5	Unfused
12	11.5	11	4-5, 2-3	1, 5	2-7
24	23	22	3-4	1, 5	2-7

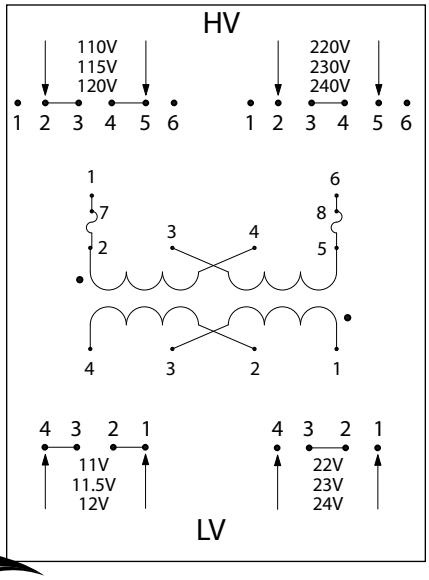

PH***PG Schematic for 750VA and 1000VA Units

High Voltage (HV) (Primary Volts)			Install Supplied Links Between Terminals	Supply Lines Connect To	Install Fuse Clips To
120	115	110	2-3, 4-5	2, 5	Unfused
240	230	220	3-4	2, 5	Unfused
120	115	110	2-3, 4-5	1, 6	2-7, 5-8
240	230	220	3-4	1, 6	2-7, 5-8

Low Voltage (LV) (Secondary Volts)			Install Supplied Links Between Terminals	Load Lines Connect To	Install Fuse Clips To
12	11.5	11	3-4, 1-2	1, 4	Unfused
24	23	22	2-3	1, 4	Unfused

Note: secondary fuse clips not available on PH750PG or PH1000PG.

© Hammond Power Solutions Inc.

Data subject to change without notice.

***HPS IMPERATOR* - Wiring Schematic Drawings continued**

Group H

PH***MBMH Schematic for 50 and 75VA Units

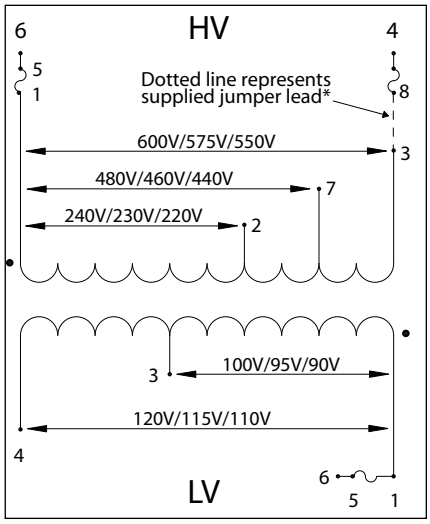

High Voltage (HV) (Primary Volts)			Install Supplied Jumpers Between Terminals	Supply Lines Connect To	Install Fuse Clips To
600	575	550	None	1, 3	Unfused
480	460	440	None	1, 7	Unfused
240	230	220	None	1, 2	Unfused
600	575	550	3-8	6, 4	1-5, 4-8
480	460	440	8-7	6, 4	1-5, 4-8
240	230	220	2-8	6, 4	1-5, 4-8

Low Voltage (LV) (Secondary Volts)			Install Supplied Jumpers/ Links Between Terminals	Load Lines Connect To	Install Fuse Clips To
120	115	110	None	1, 4	Unfused
100	95	90	None	1, 3	Unfused
120	115	110	None	4, 6	1-5
100	95	90	None	3, 6	1-5

***This primary fuse jumper is supplied with the primary fuse kit only.**

PH***MBMH Schematic for 100VA to 1500VA Units

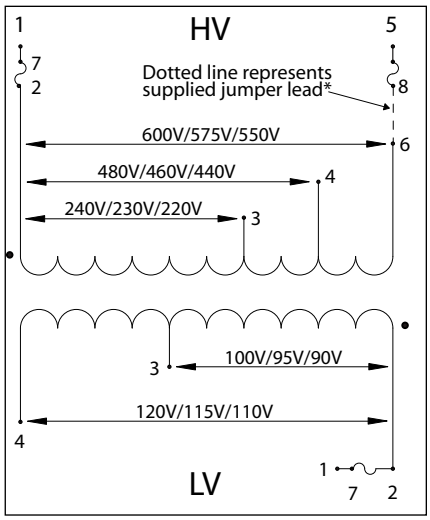

High Voltage (HV) (Primary Volts)			Install Supplied Jumpers Between Terminals	Supply Lines Connect To	Install Fuse Clips To
600	575	550	None	2, 6	Unfused
480	460	440	None	2, 4	Unfused
240	230	220	None	2, 3	Unfused
600	575	550	8-6	1, 5	2-7, 5-8
480	460	440	4-8	1, 5	2-7, 5-8
240	230	220	3-8	1, 5	2-7, 5-8

Low Voltage (LV) (Secondary Volts)			Install Supplied Jumpers/ Links Between Terminals	Load Lines Connect To	Install Fuse Clips To
120	115	110	None	2, 4	Unfused
100	95	90	None	2, 3	Unfused
120	115	110	None	1, 4	2-7
100	95	90	None	1, 3	2-7

***This primary fuse jumper is supplied with the primary fuse kit only.**

© Hammond Power Solutions Inc.
Data subject to change without notice.

HPS IMPERATOR - Wiring Schematic Drawings continued

Group I

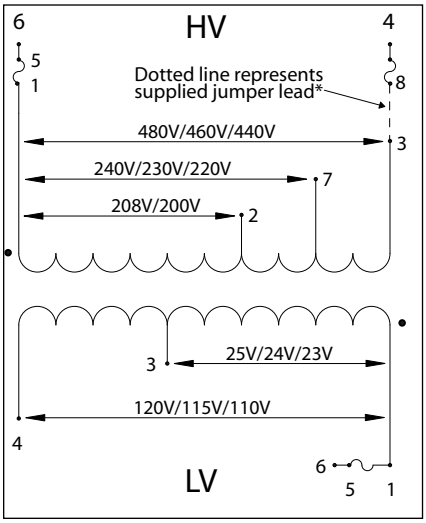

*This primary fuse jumper is supplied with the primary fuse kit only.

PH***MLI Schematic for 50, 75 and 100VA Units

High Voltage (HV) (Primary Volts)	Install Supplied Jumpers Between Terminals	Supply Lines Connect To	Install Fuse Clips To
480 460 440	None	1, 3	Unfused
240 230 220	None	1, 7	Unfused
208 200	None	1, 2	Unfused
480 460 440	3-8	6, 4	1-5, 4-8
240 230 220	8-7	6, 4	1-5, 4-8
208 200	2-8	6, 4	1-5, 4-8

Low Voltage (LV) (Secondary Volts)	Install Supplied Jumpers Between Terminals	Load Lines Connect To	Install Fuse Clips To
120 115 110	None	1, 4	Unfused
25 24 23	None	1, 3	Unfused
120 115 110	None	4, 6	1-5
25 24 23	None	3, 6	1-5

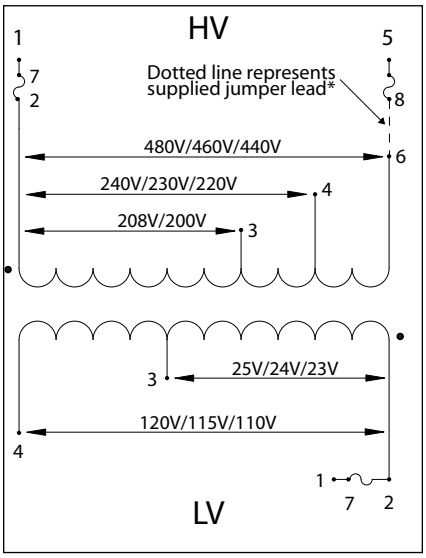

*This primary fuse jumper is supplied with the primary fuse kit only.

PH***MLI Schematic for 150VA to 500VA Units

High Voltage (HV) (Primary Volts)	Install Supplied Jumpers Between Terminals	Supply Lines Connect To	Install Fuse Clips To
480 460 440	None	2, 6	Unfused
240 230 220	None	2, 4	Unfused
208 200	None	2, 3	Unfused
480 460 440	8-6	1, 5	2-7, 5-8
240 230 220	4-8	1, 5	2-7, 5-8
208 200	3-8	1, 5	2-7, 5-8

Low Voltage (LV) (Secondary Volts)	Install Supplied Jumpers Between Terminals	Load Lines Connect To	Install Fuse Clips To
120 115 110	None	2, 4	Unfused
25 24 23	None	2, 3	Unfused
120 115 110	None	1, 4	2-7
25 24 23	None	1, 3	2-7

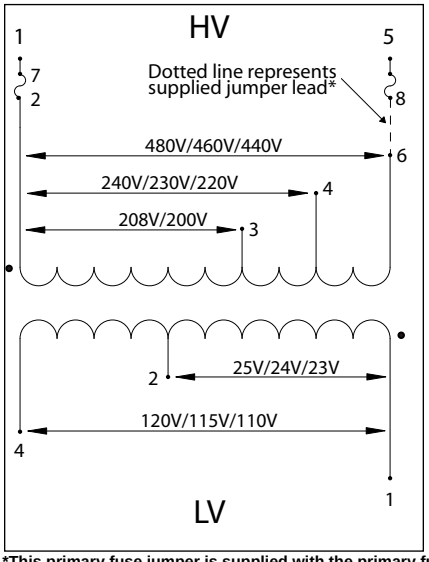

*This primary fuse jumper is supplied with the primary fuse kit only.

PH***MLI Schematic for 750VA and 1000VA Units

High Voltage (HV) (Primary Volts)	Install Supplied Jumpers Between Terminals	Supply Lines Connect To	Install Fuse Clips To
480 460 440	None	2, 6	Unfused
240 230 220	None	2, 4	Unfused
208 200	None	2, 3	Unfused
480 460 440	8-6	1, 5	2-7, 5-8
240 230 220	4-8	1, 5	2-7, 5-8
208 200	3-8	1, 5	2-7, 5-8

Low Voltage (LV) (Secondary Volts)	Install Supplied Jumpers Between Terminals	Load Lines Connect To	Install Fuse Clips To
120 115 110	None	1, 4	Unfused
25 24 23	None	1, 2	Unfused

Note: secondary fuse clips for 24V tap not available on the PH750MLI or PH1000MLI units.

© Hammond Power Solutions Inc.

Data subject to change without notice.

***HPS IMPERATOR* - Wiring Schematic Drawings continued**

Group J

PH***MEMX Schematic for 50, 75 and 100VA Units

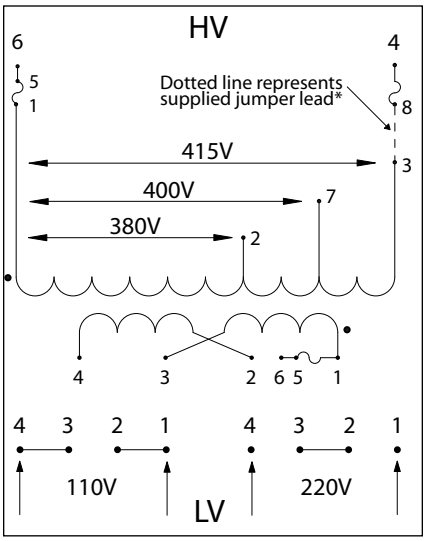

High Voltage (HV) (Primary Volts)	Install Supplied Jumpers Between Terminals	Supply Lines Connect To	Install Fuse Clips To
415	None	1, 3	Unfused
400	None	1, 7	Unfused
380	None	1, 2	Unfused
415	3-8	6, 4	1-5, 4-8
400	8-7	6, 4	1-5, 4-8
380	2-8	6, 4	1-5, 4-8

Low Voltage (LV) (Secondary Volts)	Install Supplied Links Between Terminals	Load Lines Connect To	Install Fuse Clips To
110	3-4, 1-2	1, 4	Unfused
220	2-3	1, 4	Unfused
110	3-4, 1-2	4, 6	1-5
220	2-3	4, 6	1-5

***This primary fuse jumper is supplied with the primary fuse kit only.**

PH***MEMX Schematic for 150VA to 1000VA Units

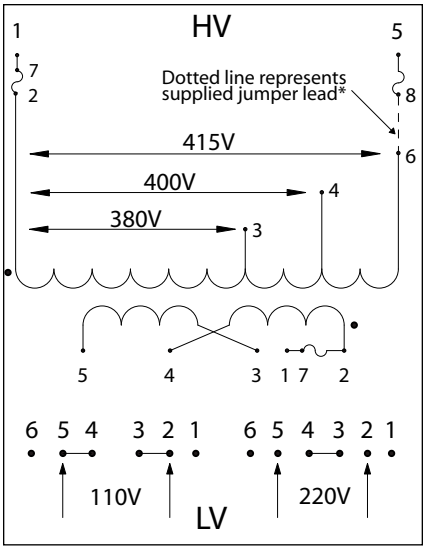

High Voltage (HV) (Primary Volts)	Install Supplied Jumpers Between Terminals	Supply Lines Connect To	Install Fuse Clips To
415	None	2, 6	Unfused
400	None	2, 4	Unfused
380	None	2, 3	Unfused
415	8-6	1, 5	2-7, 5-8
400	4-8	1, 5	2-7, 5-8
380	3-8	1, 5	2-7, 5-8

Low Voltage (LV) (Secondary Volts)	Install Supplied Links Between Terminals	Load Lines Connect To	Install Fuse Clips To
110	4-5, 2-3	2, 5	Unfused
220	3-4	2, 5	Unfused
110	4-5, 2-3	1, 5	2-7
220	3-4	1, 5	2-7

***This primary fuse jumper is supplied with the primary fuse kit only.**

© Hammond Power Solutions Inc.
Data subject to change without notice.

HPS IMPERATOR - Wiring Schematic Drawings continued

Group K

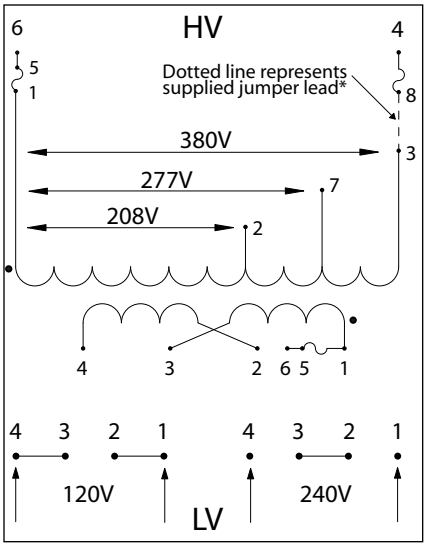

PH***MGJ Schematic for 50, 75 and 100VA Units

High Voltage (HV) (Primary Volts)	Install Supplied Jumpers Between Terminals	Supply Lines Connect To	Install Fuse Clips To
380	None	1, 3	Unfused
277	None	1, 7	Unfused
208	None	1, 2	Unfused
380	3-8	6, 4	1-5, 4-8
277	8-7	6, 4	1-5, 4-8
208	2-8	6, 4	1-5, 4-8

Low Voltage (LV) (Secondary Volts)	Install Supplied Links Between Terminals	Load Lines Connect To	Install Fuse Clips To
120	3-4, 1-2	1, 4	Unfused
240	2-3	1, 4	Unfused
120	3-4, 1-2	4, 6	1-5
240	2-3	4, 6	1-5

***This primary fuse jumper is supplied with the primary fuse kit only.**

PH***MGJ Schematic for 150VA to 1000VA Units

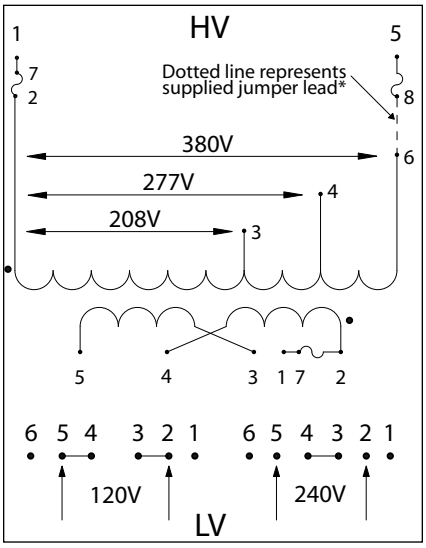

High Voltage (HV) (Primary Volts)	Install Supplied Jumpers Between Terminals	Supply Lines Connect To	Install Fuse Clips To
380	None	2, 6	Unfused
277	None	2, 4	Unfused
208	None	2, 3	Unfused
380	8-6	1, 5	2-7, 5-8
277	4-8	1, 5	2-7, 5-8
208	3-8	1, 5	2-7, 5-8

Low Voltage (LV) (Secondary Volts)	Install Supplied Links Between Terminals	Load Lines Connect To	Install Fuse Clips To
120	4-5, 2-3	2, 5	Unfused
240	3-4	2, 5	Unfused
120	4-5, 2-3	1, 5	2-7
240	3-4	1, 5	2-7

***This primary fuse jumper is supplied with the primary fuse kit only.**

© Hammond Power Solutions Inc.

Data subject to change without notice.

HPS Spartan and *HPS Fusion* - Wiring Schematic Drawings

Group A

SP*ACP Schematic Connections for 600/480 to 120 X 240**

FS*ACP Schematic Connections for 600/480 to 120 X 240**

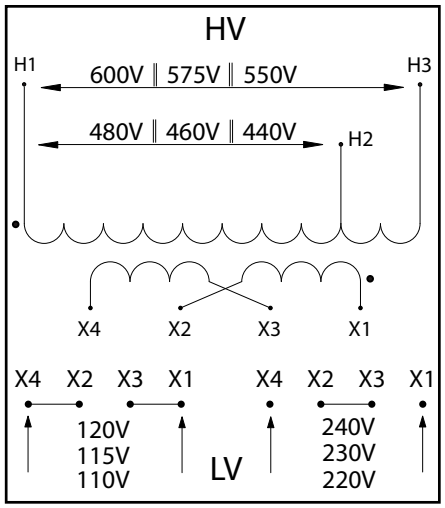

High Voltage (HV) (Primary Volts)			Install Supplied Jumpers Between Terminals	Supply Lines Connect To
600	575	550	None	H1, H3
480	460	440	None	H1, H2

Low Voltage (LV) (Secondary Volts)			Install Supplied Links Between Terminals	Load Lines Connect To
120	115	110	X1-X3, X2-X4	X1, X4
240	230	220	X2-X3	X1, X4

Group B

SP*AR Schematic Connections for 600/480 to 12 X 24**

FS*AR Schematic Connections for 600/480 to 12 X 24**

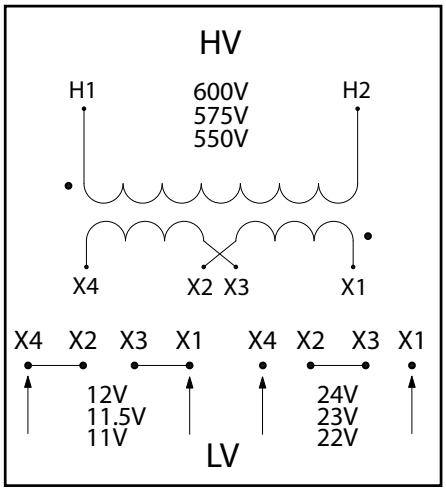

High Voltage (HV) (Primary Volts)			Install Supplied Jumpers Between Terminals	Supply Lines Connect To
600	575	550	None	H1, H2

Low Voltage (LV) (Secondary Volts)			Install Supplied Links Between Terminals	Load Lines Connect To
12	11.5	11	X1-X3, X2-X4	X1, X4
24	23	22	X2-X3	X1, X4

© Hammond Power Solutions Inc.

Data subject to change without notice.

***HPS* Fusion and HPS *Spartan* - Wiring Schematic Drawings continued**

Group C

SP*MQMJ Schematic Connections for 240 X 480 to 120 X 240**

FS*MQMJ Schematic Connections for 240 X 480 to 120 X 240**

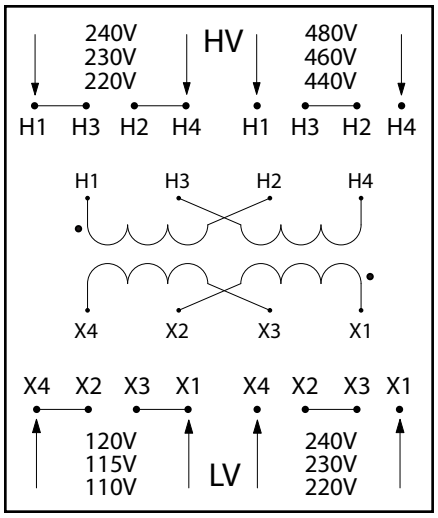

High Voltage (HV) (Primary Volts)			Install Supplied Jumpers Between Terminals	Supply Lines Connect To
240	230	220	H1-H3, H2-H4	H1, H4
480	460	440	H2-H3	H1, H4

Low Voltage (LV) (Secondary Volts)			Install Supplied Links Between Terminals	Load Lines Connect To
120	115	110	X1-X3, X2-X4	X1, X4
240	230	220	X2-X3	X1, X4

Group D

SP*QR Schematic Connections for 240 X 480 to 12 X 24**

FS*QR Schematic Connections for 240 X 480 to 12 X 24**

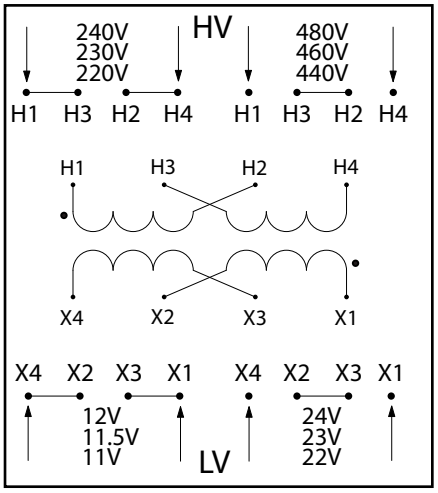

High Voltage (HV) (Primary Volts)			Install Supplied Jumpers Between Terminals	Supply Lines Connect To
240	230	220	H1-H3, H2-H4	H1, H4
480	460	440	H2-H3	H1, H4

Low Voltage (LV) (Secondary Volts)			Install Supplied Links Between Terminals	Load Lines Connect To
12	11.5	11	X1-X3, X2-X4	X1, X4
24	23	22	X2-X3	X1, X4

© Hammond Power Solutions Inc.

Data subject to change without notice.

***HPS* Fusion and HPS *Spartan* - Wiring Schematic Drawings continued**

Group E

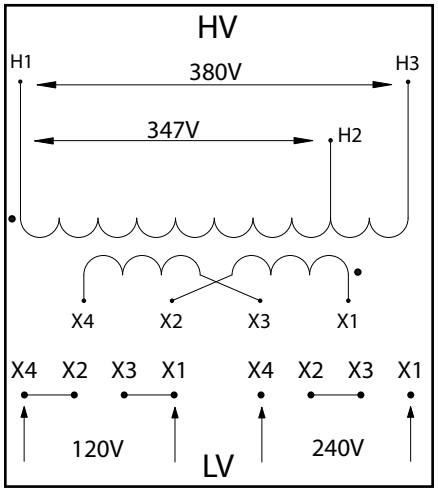

SP*KHP Schematic Connections for 380/347 to 120 X 240**

FS*KHP Schematic Connections for 380/347 to 120 X 240**

High Voltage (HV) (Primary Volts)	Install Supplied Jumpers Between Terminals	Supply Lines Connect To
380	None	H1, H3
347	None	H1, H2

Low Voltage (LV) (Secondary Volts)	Install Supplied Links Between Terminals	Load Lines Connect To
120	X1-X3, X2-X4	X1, X4
240	X2-X3	X1, X4

Group F

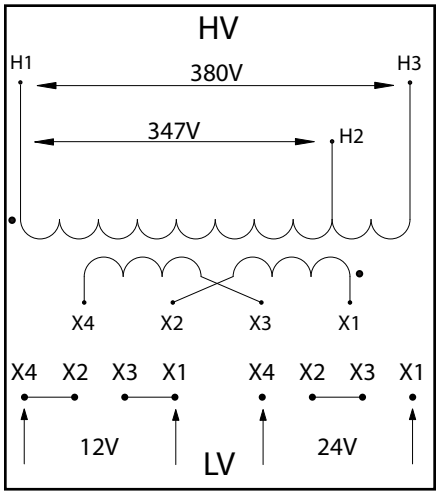

SP*KHR Schematic Connections for 380/347 to 12 X 24**

FS*KHR Schematic Connections for 380/347 to 12 X 24**

High Voltage (HV) (Primary Volts)	Install Supplied Jumpers Between Terminals	Supply Lines Connect To
380	None	H1, H3
347	None	H1, H2

Low Voltage (LV) (Secondary Volts)	Install Supplied Links Between Terminals	Load Lines Connect To
12	X1-X3, X2-X4	X1, X4
24	X2-X3	X1, X4

© Hammond Power Solutions Inc.
Data subject to change without notice.

***HPS Spartan and HPS Fusion* - Wiring Schematic Drawings continued**

Group G

SP*NJ Schematic Connections for 277 to 120**

FS*NJ Schematic Connections for 277 to 120**

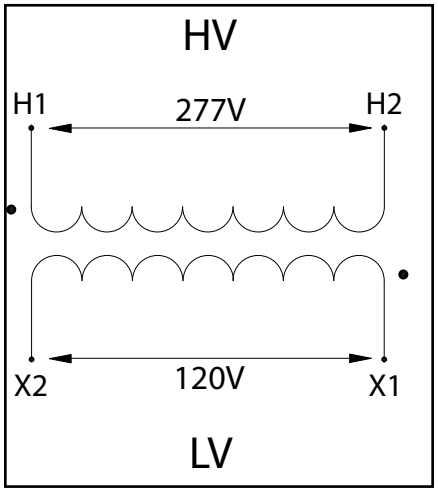

High Voltage (HV) (Primary Volts)	Install Supplied Jumpers Between Terminals	Supply Lines Connect To
277	None	H1, H2

Low Voltage (LV) (Secondary Volts)	Install Supplied Links Between Terminals	Load Lines Connect To
120	None	X1, X2

Group H

SP*PR Schematic Connections for 120 X 240 to 12 X 24**

FS*PR Schematic Connections for 120 X 240 to 12 X 24**

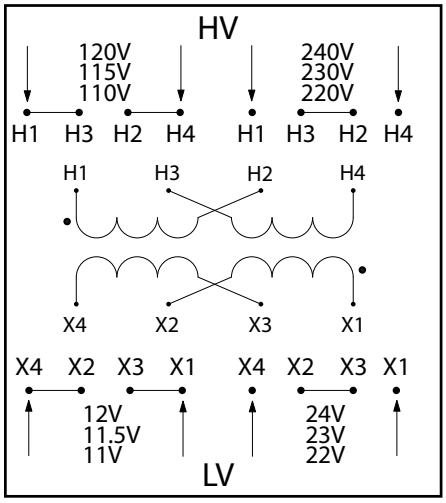

High Voltage (HV) (Primary Volts)			Install Supplied Jumpers Between Terminals	Supply Lines Connect To
120	115	110	H1-H3, H2-H4	H1, H4
240	230	220	H2-H3	H1, H4

Low Voltage (LV) (Secondary Volts)			Install Supplied Links Between Terminals	Load Lines Connect To
12	11.5	11	X1-X3, X2-X4	X1, X4
24	23	22	X2-X3	X1, X4

© Hammond Power Solutions Inc.

Data subject to change without notice.

***HPS Spartan and HPS Fusion* - Wiring Schematic Drawings continued**

Group I

SP*SP Schematic Connections for 208 X 416 to 120 X 240**

FS*SP Schematic Connections for 208 X 416 to 120 X 240**

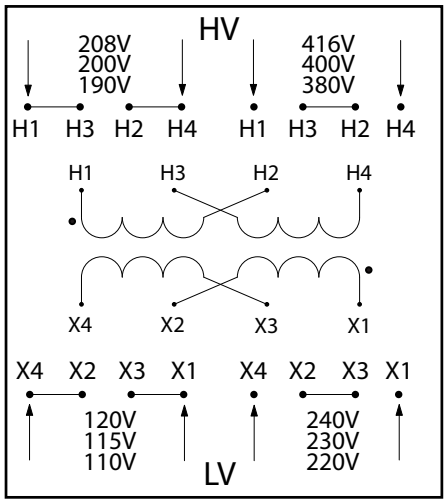

High Voltage (HV) (Primary Volts)			Install Supplied Jumpers Between Terminals	Supply Lines Connect To
208	200	190	H1-H3, H2-H4	H1, H4
416	400	380	H2-H3	H1, H4

Low Voltage (LV) (Secondary Volts)			Install Supplied Links Between Terminals	Load Lines Connect To
120	115	110	X1-X3, X2-X4	X1, X4
240	230	220	X2-X3	X1, X4

Group J

SP*SR Schematic Connections for 208 X 416 to 12 X 24**

FS*SR Schematic Connections for 208 X 416 to 12 X 24**

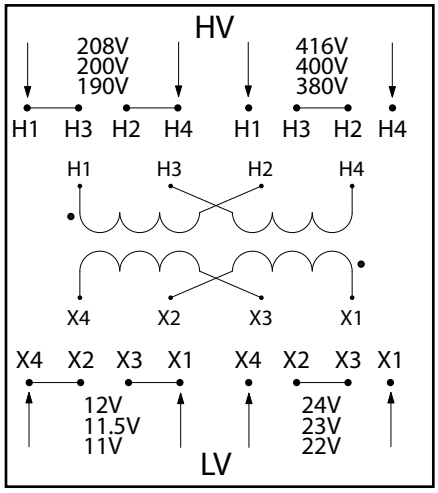

High Voltage (HV) (Primary Volts)			Install Supplied Jumpers Between Terminals	Supply Lines Connect To
208	200	190	H1-H3, H2-H4	H1, H4
416	400	380	H2-H3	H1, H4

Low Voltage (LV) (Secondary Volts)			Install Supplied Links Between Terminals	Load Lines Connect To
12	11.5	11	X1-X3, X2-X4	X1, X4
24	23	22	X2-X3	X1, X4

© Hammond Power Solutions Inc.
Data subject to change without notice.

© Hammond Power Solutions Inc.

Data subject to change without notice.

SECTION 2

HPS UNIVERSAL™ BUCK-BOOST TRANSFORMERS

Single and Three Phase Potted Buck-Boost Transformers

Buck-Boost Applications & Standard Specification..... 82

Selecting Buck-Boost Transformers 83

Single Phase Selection Tables 84

Three Phase Selection Tables 87

Single Phase Specification Tables 90

Three Phase Specification Tables 91

Single Phase Connection Diagrams 93

Three Phase Connection Diagrams 94

Three Phase Buck-Boost Explained 95

Why Use Buck-Boost Transformers?

The advantages of using a buck-boost transformer over an equivalent standard isolation transformer are:

Advantages
1) Used in a variety of applications
2) Inexpensive
3) Smaller and lighter
4) More efficient
5) 5-10 times increase in kVA

Disadvantages
1) No circuit isolation
2) Cannot create a neutral
3) KVA and voltages do not match what's on the nameplate kVA and voltages.

Buck-Boost Application

Buck-boost transformers offer an economical solution to the adjustment of line voltages that are slightly above or below normal. When a buck-boost transformer is connected as an autotransformer, only a portion of the load kVA is actually transformed. The majority of the load kVA is passed directly through to the source. For this reason a buck-boost transformer may be used to supply a much larger kVA load than is indicated on the nameplate.

Buck-boost transformers can be used to adjust **stable** voltages only.

BUCK-BOOST STANDARD SPECIFICATIONS

	50 to 1000 VA	1500 to 5000 VA
UL Listed	File: E50394	File: E50394
CSA Certified	File: LR3902	File: LR3902
Frequency	50/60 Hz	50/60 Hz
Insulation System	130°C (80°C rise)	180°C (115°C rise)
Standard Design	Single Phase, welded core construction made with high quality, high permeability silicon steel laminations. Computer designed coils, accurately wound from high quality copper magnetic wire.	Single Phase, welded core construction made with high quality, high permeability silicon steel laminations. Computer designed coils, accurately wound from high quality copper magnetic wire.
Encapsulation	All units from 50VA to 5kVA are encapsulated with electrical grade silica sand and resin compounds.	All units from 50VA to 5kVA are encapsulated with electrical grade silica sand and resin compounds.
Enclosure Type	Heavy Duty NEMA Type 3R (optional NEMA 4, 4X and 12 available)	Heavy Duty NEMA Type 3R (optional NEMA 4, 4X and 12 available)
Enclosure Finish	ANSI 61 Grey, UL50	ANSI 61 Grey, UL50
Termination	Front accessible separate high and low voltage lead wires or copper tabs.	Front accessible separate high and low voltage lead wires or copper tabs.
Conduit Knock-Outs	Side and rear standard on all units.	Side and rear standard on all units.
Mounting	Standard Wall Mounting.	Standard Wall Mounting.

© Hammond Power Solutions Inc.
Data subject to change without notice.

Voltage Is the Key

Buck-boost transformers represent an economical way to both raise supply voltage caused by line drop or equipment demand on the distribution system, or lower voltage caused by increased system voltages due to supply line adjustments. Some loads including lighting and resistive loads require a stable supply to maintain performance. The detrimental effects of incorrect supply line voltage can cause equipment failure. Buck-boost transformers can correct line voltage within 5 to 25% of nominal.

Steps for Selecting Buck-Boost Transformers

The following information is required before selecting a buck-boost transformer:

(1) Line Voltage - The voltage that you want to buck (decrease) or boost (increase). This can be determined by measuring the supply line voltage with a voltmeter.
(2) Load Voltage - The voltage at which your equipment is designed to operate. This is listed on the nameplate of the load equipment.
(3) Load kVA or Load Amps - You do not need to know both - one or the other is sufficient. This information usually can be found on the nameplate of the equipment that you want to operate. It is the sum of all the equipment that represents the load.
(4) Frequency - The supply line frequency must be the same as the equipment to be operated - either 50 or 60 Hertz.
(5) Phase - The supply line should be the same as the load - either single or three phase.

Four Steps to Select the Correct Buck-Boost Transformer

1. From the top row of each “Selection Chart”, select a ‘high voltage’ and ‘low voltage’ combination that is the closest to matching the high voltage and low voltage correction that is required for your application.

2. Move down that column to the kVA or current rating equal to, or greater than, the rating required by the total load. It is not likely that the exact value of the load will be found, so go to the next higher rating.

3. From the far left column, select the corresponding catalog number of the exact buck-boost transformer required. Refer to specification tables for dimensional information.

4. Connect the transformer in accordance with the connection diagram referenced at the bottom of the same column where you selected your high voltage and low voltage combination. Connection diagrams are on pages 93 and 94 in this catalog section. They are also packaged with each transformer.

© Hammond Power Solutions Inc.
Data subject to change without notice.

How to use the Selection Chart

1. From the top row of the **"Selection Chart"** locate the high and low voltage combination that is closest to the one you require.
2. Move down that column to the kVA or Ampere rating equal to or greater than the rating required by the load.
3. From the far left column, obtain the transformer catalog number.
4. For dimensional information refer to the specifications table (Group A) on page 90.
5. The corresponding connection diagram is indicated at the bottom of the Voltage / kVA column. See page 93 for the connection diagrams.

Single Phase - Group A Selection Chart

Catalog Number	Low Voltage / High Voltage	96 / 115	100 / 110	100 / 120	105 / 115	110 / 121	110 / 132	115 / 126	115 / 138	120 / 132	120 / 144	200 / 220	208 / 229	220 / 231	220 / 242	240 / 252	240 / 264
QC05ERCB	HV Amps	2.08	4.17	2.08	4.17	4.17	2.08	4.17	2.08	4.17	2.08	2.08	2.08	4.17	2.08	4.17	2.08
	KVA	.240	.458	.250	.480	.504	.275	.526	.288	.550	.300	.458	.477	.963	.504	1.05	.550
	LV Amps	2.50	4.58	2.50	4.58	4.58	2.50	4.58	2.50	4.58	2.50	2.29	2.29	4.38	2.29	4.38	2.29
QC10ERCB	HV Amps	4.17	8.33	4.17	8.33	8.33	4.17	8.33	4.17	8.33	4.17	4.17	4.17	8.33	4.17	8.33	4.17
	KVA	.480	.917	.500	.961	1.01	.550	1.05	.575	1.10	.600	.917	.953	1.92	1.01	2.10	1.10
	LV Amps	5.00	9.17	5.00	9.17	9.17	5.00	9.17	5.00	9.17	5.00	4.58	4.58	8.75	4.58	8.75	4.58
QC15ERCB	HV Amps	6.25	12.5	6.25	12.5	12.5	6.25	12.5	6.25	12.5	6.25	6.25	6.25	12.5	6.25	12.5	6.25
	KVA	.720	1.38	.750	1.44	1.51	.825	1.58	.863	1.65	.900	1.38	1.43	2.88	1.51	3.15	1.65
	LV Amps	7.50	13.8	7.50	13.8	13.8	7.50	13.8	7.50	13.8	7.50	6.88	6.88	13.1	6.88	13.1	6.88
QC20ERCB	HV Amps	8.33	16.7	8.33	16.7	16.7	8.33	16.7	8.33	16.7	8.33	8.33	8.33	16.7	8.33	16.7	8.33
	KVA	.960	1.83	1.00	1.92	2.02	1.10	2.11	1.15	2.20	1.20	1.83	1.91	3.85	2.02	4.20	2.20
	LV Amps	10.0	18.3	10.0	18.3	18.3	10.0	18.3	10.0	18.3	10.0	9.17	9.17	17.5	9.17	17.5	9.17
QC25ERCB	HV Amps	10.4	20.8	10.4	20.8	20.8	10.4	20.8	10.4	20.8	10.4	10.4	10.4	20.8	10.4	20.8	10.4
	KVA	1.20	2.29	1.25	2.40	2.52	1.37	2.63	1.44	2.75	1.50	2.29	2.38	4.81	2.52	5.25	2.75
	LV Amps	12.5	22.9	12.5	22.9	22.9	12.5	22.9	12.5	22.9	12.5	11.4	11.4	21.8	11.4	21.8	11.4
QC35ERCB	HV Amps	14.6	29.2	14.6	29.2	29.2	14.6	29.2	14.6	29.2	14.6	14.6	14.6	29.2	14.6	29.2	14.6
	KVA	1.68	3.21	1.75	3.36	3.53	1.92	3.68	2.01	3.85	2.10	3.21	3.34	6.74	3.53	7.35	3.85
	LV Amps	17.5	32.1	17.5	32.1	32.1	17.5	32.1	17.5	32.1	17.5	16.0	16.0	30.6	16.0	30.6	16.0
QC50ERCB	HV Amps	20.8	41.6	20.8	41.7	41.7	20.8	41.7	20.8	41.7	20.8	20.8	20.8	41.7	20.8	41.7	20.8
	KVA	2.39	4.58	2.50	4.80	5.04	2.75	5.26	2.87	5.50	3.00	4.58	4.77	9.62	5.04	10.5	5.50
	LV Amps	24.9	45.8	25.0	45.8	45.8	25.0	45.8	25.0	45.8	25.0	22.9	22.9	43.7	22.9	43.7	22.9
QC75ERCB	HV Amps	31.2	62.5	31.2	62.5	62.5	31.2	62.5	31.2	62.5	31.2	31.2	31.2	62.5	31.2	62.5	31.2
	KVA	3.60	6.87	3.75	7.20	7.56	4.12	7.89	4.31	8.25	4.50	6.87	7.15	14.4	7.56	15.7	8.25
	LV Amps	37.5	68.7	37.5	68.7	68.7	37.5	68.7	37.5	68.7	37.5	34.4	34.4	65.6	34.4	65.6	34.4
Q1C0ERCB	HV Amps	41.7	83.3	41.7	83.3	83.3	41.7	83.3	41.7	83.3	41.7	41.7	41.7	83.3	41.7	83.3	41.7
	KVA	4.80	9.17	5.00	9.60	10.1	5.50	10.5	5.75	11.0	6.00	9.17	9.53	19.2	10.1	21.0	11.0
	LV Amps	50.0	91.7	50.0	91.7	91.7	50.0	91.7	50.0	91.7	50.0	45.8	45.8	87.5	45.8	87.5	45.8
Q1C5ERCF	HV Amps	62.5	125	62.5	125	125	62.5	125	62.5	125	62.5	62.5	62.5	125	62.5	125	62.5
	KVA	7.20	13.7	7.50	14.4	15.1	8.25	15.8	8.62	16.5	9.00	13.7	14.3	28.9	15.1	31.5	16.5
	LV Amps	75.0	137	75.0	137	137	75.0	137	75.0	137	75.0	68.7	68.8	131	68.7	131	68.7
Q002ERCF	HV Amps	83.3	166	83.3	166	166	83.3	166	83.3	166	83.3	83.3	83.3	166	83.3	166	83.3
	KVA	9.58	18.3	10.0	19.2	20.1	11.0	21.0	11.5	22.0	12.0	18.3	19.0	38.5	20.1	42.0	22.0
	LV Amps	99.8	183	100	183	183	100	183	100	183	100	91.7	91.7	175	91.6	175	91.6
Q003ERCF	HV Amps	125	250	125	250	250	125	250	125	250	125	125	125	250	125	250	125
	KVA	14.4	27.5	15.0	28.8	30.2	16.5	31.5	17.2	33.0	18.0	27.5	28.6	57.7	30.2	63.0	33.0
	LV Amps	150	275	150	275	275	150	275	150	275	150	137	137	262	137	262	137
Q005ERCF	HV Amps	208	417	208	417	417	208	417	208	417	208	208	208	417	208	417	208
	KVA	24.0	45.8	25.0	48.0	50.4	27.5	52.7	28.7	55.0	30.0	45.8	47.7	96.3	50.4	105	55.0
	LV Amps	250	458	250	458	458	250	458	250	458	250	229	229	438	229	438	229
CONNECTION DIAGRAM		2	1	2	1	1	2	1	2	1	2	4	4	3	4	3	4

© Hammond Power Solutions Inc.
Data subject to change without notice.

How to use the Selection Chart

1. From the top row of the **"Selection Chart"** locate the high and low voltage combination that is closest to the one you require.
2. Move down that column to the kVA or Ampere rating equal to or greater than the rating required by the load.
3. From the far left column, obtain the transformer catalog number.
4. For dimensional information refer to the specifications table (Group B) on page 90.
5. The corresponding connection diagram is indicated at the bottom of the Voltage / kVA column. See page 93 for the connection diagrams.

Single Phase - Group B Selection Chart

Catalog Number	Low Voltage / High Voltage	95 / 120	101 / 115	106 / 120	110 / 125	110 / 139	115 / 130	115 / 146	120 / 136	120 / 152	203 / 230	208 / 236	220 / 235	220 / 249	230 / 261	240 / 256	240 / 272
QC05ESCB	HV Amps	1.56	3.13	3.13	3.13	1.56	3.13	1.56	3.13	1.56	1.56	1.56	3.13	1.56	1.56	3.13	1.56
	KVA	.188	.359	.375	.390	.218	.407	.228	.425	.238	.359	.368	.733	.390	.407	.800	.425
	LV Amps	1.98	3.54	3.54	3.54	1.98	3.54	1.98	3.54	1.98	1.77	1.77	3.33	1.77	1.77	3.33	1.77
QC10ESCB	HV Amps	3.12	6.25	6.25	6.25	3.12	6.25	3.12	6.25	3.12	3.12	3.12	6.25	3.12	3.12	6.25	3.12
	KVA	.376	.718	.751	.779	.435	.815	.455	.850	.475	.719	.737	1.47	.779	.815	1.60	.850
	LV Amps	3.96	7.08	7.08	7.08	3.96	7.08	3.96	7.08	3.96	3.54	3.54	6.67	3.54	3.54	6.67	3.54
QC15ESCB	HV Amps	4.69	9.38	9.38	9.38	4.69	9.38	4.69	9.38	4.69	4.69	4.69	9.38	4.69	4.69	9.38	4.69
	KVA	.564	1.07	1.13	1.17	.653	1.22	.683	1.28	.713	1.08	1.10	2.20	1.17	1.22	2.40	1.28
	LV Amps	5.94	10.6	10.6	10.6	5.94	10.6	5.94	10.6	5.94	5.31	5.31	10.0	5.31	5.31	10.0	5.31
QC20ESCB	HV Amps	6.25	12.5	12.5	12.5	6.25	12.5	6.25	12.5	6.25	6.25	6.25	12.5	6.25	6.25	12.5	6.25
	KVA	.752	1.43	1.50	1.56	0.871	1.63	0.91	1.70	.950	1.44	1.47	2.93	1.56	1.63	3.20	1.70
	LV Amps	7.92	14.2	14.2	14.2	7.92	14.2	7.92	14.2	7.92	7.08	7.08	13.3	7.08	7.08	13.3	7.08
QC25ESCB	HV Amps	7.81	15.6	15.6	15.6	7.81	15.6	7.81	15.6	7.81	7.81	7.81	15.6	7.81	7.81	15.6	7.81
	KVA	0.94	1.80	1.87	1.95	1.09	2.04	1.14	2.12	1.19	1.80	1.84	3.67	1.95	2.04	4.00	2.12
	LV Amps	9.90	17.7	17.7	17.7	9.87	17.7	9.90	17.7	9.90	8.85	8.85	16.7	8.85	8.85	16.7	8.85
QC35ESCB	HV Amps	10.9	21.9	21.9	21.9	10.9	21.9	10.9	21.9	10.9	10.9	10.9	21.9	10.9	10.9	21.9	10.9
	KVA	1.31	2.51	2.63	2.73	1.52	2.85	1.59	2.98	1.66	2.51	2.58	5.13	2.73	2.85	5.60	2.98
	LV Amps	13.9	24.8	24.8	24.8	13.9	24.8	13.9	24.8	13.9	12.4	12.4	23.3	12.4	12.4	23.3	12.4
QC50ESCB	HV Amps	15.6	31.2	31.2	31.2	15.6	31.2	15.6	31.2	15.6	15.6	15.6	31.2	15.6	15.6	31.2	15.6
	KVA	1.88	3.59	3.75	3.90	2.18	4.07	2.28	4.25	2.37	3.59	3.68	7.33	3.90	4.07	8.00	4.25
	LV Amps	19.8	35.4	35.4	35.4	19.8	35.4	19.8	35.4	19.8	17.7	17.7	33.3	17.7	17.7	33.3	17.7
QC75ESCB	HV Amps	23.4	46.8	46.8	46.9	23.4	46.9	23.4	46.9	23.4	23.4	23.4	46.9	23.4	23.4	46.9	23.4
	KVA	2.82	5.39	5.63	5.84	3.27	6.10	3.41	6.37	3.56	5.39	5.53	11.0	5.84	6.11	12.0	6.37
	LV Amps	29.7	53.1	53.1	53.1	29.7	53.1	29.7	53.1	29.7	26.6	26.6	50.0	26.6	26.6	50.0	26.6
Q1C0ESCB	HV Amps	31.2	62.5	62.5	62.5	31.2	62.5	31.2	62.5	31.2	31.2	31.2	62.5	31.2	31.2	62.5	31.2
	KVA	3.76	7.18	7.50	7.79	4.35	8.15	4.55	8.50	4.75	7.19	7.37	14.7	7.79	8.15	16.0	8.50
	LV Amps	39.6	70.8	70.8	70.8	39.6	70.8	39.6	70.8	39.6	35.4	35.4	66.7	35.4	35.4	66.7	35.4
Q1C5ESCF	HV Amps	46.9	93.7	93.7	93.7	46.9	93.7	46.9	93.7	46.9	46.9	46.8	93.7	46.9	46.9	93.7	46.9
	KVA	5.64	10.8	11.2	11.7	6.53	12.2	6.83	12.7	7.12	10.8	11.0	22.0	11.7	12.2	24.0	12.7
	LV Amps	59.4	106	106	106	59.4	106	59.4	106	59.4	53.1	53.1	100	53.1	53.1	100	53.1
Q002ESCF	HV Amps	62.5	125	125	125	62.5	125	62.5	125	62.5	62.5	62.5	125	62.5	62.5	125	62.5
	KVA	7.50	14.4	15.0	15.6	8.71	16.3	9.10	17.0	9.50	14.4	14.7	29.3	15.6	16.3	32.0	17.0
	LV Amps	79.1	142	142	142	79.2	142	79.2	142	79.2	70.8	70.8	133	70.8	70.8	133	70.8
Q003ESCF	HV Amps	93.7	187	187	187	93.7	187	93.7	187	93.7	93.7	93.7	187	93.7	93.7	187	93.7
	KVA	11.3	21.5	22.5	23.4	13.0	24.4	13.6	25.5	14.2	21.6	22.1	44.0	23.4	24.4	48.0	25.5
	LV Amps	119	212	212	212	119	212	119	212	119	106	106	200	106	106	200	106
Q005ESCF	HV Amps	156	312	312	312	156	312	156	312	156	156	156	312	156	156	313	156
	KVA	18.8	35.9	37.5	39.0	21.8	40.7	22.8	42.5	23.8	35.9	36.8	73.3	39.0	40.7	80.0	42.5
	LV Amps	198	354	354	354	198	354	198	354	198	177	177	333	177	177	333	177
CONNECTION DIAGRAM		2	1	1	1	2	1	2	1	2	4	4	3	4	4	3	4

© Hammond Power Solutions Inc.

Data subject to change without notice.

How to use the Selection Chart

1. From the top row of the **"Selection Chart"** locate the high and low voltage combination that is closest to the one you require.
2. Move down that column to the kVA or Ampere rating equal to or greater than the rating required by the load.
3. From the far left column, obtain the transformer catalog number.
4. For dimensional information refer to the specifications table (Group C) on page 91.
5. The corresponding connection diagram is indicated at the bottom of the Voltage / kVA column. See page 93 for the connection diagrams.

Single Phase - Group C Selection Chart

Catalog Number	Low Voltage / High Voltage	200 / 220	208 / 229	220 / 242	230 / 276	240 / 264	380 / 418	416 / 458	430 / 473	435 / 457	436 / 480	440 / 462	440 / 484	450 / 473	456 / 479	460 / 483	480 / 504
QC05DTCB	HV Amps	2.08	2.08	2.08	1.04	2.08	1.04	1.04	1.04	2.08	1.04	2.08	1.04	2.08	2.08	2.08	2.08
	KVA	0.46	0.48	0.50	0.29	0.55	0.44	0.48	0.49	0.95	0.50	0.96	0.50	0.98	1.00	1.01	1.05
	LV Amps	2.29	2.29	2.29	1.25	2.29	1.15	1.15	1.15	2.19	1.15	2.19	1.15	2.19	2.19	2.19	2.19
QC10DTCB	HV Amps	4.17	4.17	4.17	2.08	4.17	2.08	2.08	2.08	4.17	2.08	4.17	2.08	4.17	4.17	4.17	4.17
	KVA	0.92	0.95	1.01	0.58	1.10	0.87	0.95	0.99	1.90	1.00	1.93	1.01	1.97	2.00	2.01	2.10
	LV Amps	4.58	4.58	4.58	2.50	4.58	2.29	2.29	2.29	4.38	2.29	4.38	2.29	4.38	4.38	4.38	4.38
QC15DTCB	HV Amps	6.25	6.25	6.25	3.13	6.25	3.13	3.13	3.13	6.25	3.13	6.25	3.13	6.25	6.25	6.25	6.25
	KVA	1.38	1.43	1.51	0.86	1.65	1.31	1.43	1.48	2.85	1.50	2.89	1.51	2.95	2.99	3.02	3.15
	LV Amps	6.88	6.88	6.88	3.75	6.88	3.44	3.44	3.44	6.56	3.44	6.56	3.44	6.56	6.56	6.56	6.56
QC20DTCB	HV Amps	8.33	8.33	8.33	4.17	8.33	4.17	4.17	4.17	8.33	4.17	8.33	4.17	8.33	8.33	8.33	8.33
	KVA	1.83	1.91	2.02	1.15	2.20	1.74	1.91	1.97	3.81	2.00	3.85	2.02	3.94	3.99	4.03	4.20
	LV Amps	9.17	9.17	9.17	5.00	9.17	4.58	4.58	4.58	8.75	4.58	8.75	4.58	8.75	8.75	8.75	8.75
QC25DTCB	HV Amps	10.4	10.4	10.4	5.21	10.4	5.21	5.21	5.21	10.4	5.21	10.4	5.21	10.4	10.4	10.4	10.4
	KVA	2.29	2.38	2.52	1.44	2.75	2.18	2.38	2.46	4.76	2.50	4.81	2.52	4.92	4.99	5.03	5.25
	LV Amps	11.5	11.5	11.5	6.3	11.5	5.73	5.73	5.73	10.9	5.73	10.9	5.73	10.9	10.9	10.9	10.9
QC35DTCB	HV Amps	14.6	14.6	14.6	7.3	14.6	7.3	7.3	7.3	14.6	7.3	14.6	7.3	14.6	14.6	14.6	14.6
	KVA	3.21	3.34	3.53	2.01	3.85	3.05	3.34	3.45	6.61	3.50	6.74	3.53	6.89	6.98	7.0	7.4
	LV Amps	16.0	16.0	16.0	8.8	16.0	8.0	8.0	8.0	15.3	8.0	15.3	8.0	15.3	15.3	15.3	15.3
QC50DTCB	HV Amps	20.8	20.8	20.8	10.4	20.8	10.4	10.4	10.4	20.8	10.4	20.8	10.4	20.8	20.8	20.8	20.8
	KVA	4.58	4.77	5.04	2.88	5.5	4.35	4.77	4.93	9.52	5.00	9.63	5.04	9.84	9.98	10.1	10.5
	LV Amps	22.9	22.9	22.9	12.5	22.9	11.5	11.5	11.5	21.9	11.5	21.9	11.5	21.9	21.9	21.9	21.9
QC75DTCB	HV Amps	31.3	31.3	31.3	15.6	31.3	15.6	15.6	15.6	31.3	15.6	31.3	15.6	31.3	31.3	31.3	31.3
	KVA	6.88	7.15	7.56	4.31	8.25	6.53	7.15	7.39	14.3	7.49	14.4	7.56	14.8	15.0	15.1	15.8
	LV Amps	34.4	34.4	34.4	18.8	34.4	17.2	17.2	17.2	32.8	17.2	32.8	17.2	32.8	32.8	32.8	32.8
Q1C0DTCB	HV Amps	41.7	41.7	41.7	20.8	41.7	20.8	20.8	20.8	41.7	20.8	41.7	20.8	41.7	41.7	41.7	41.7
	KVA	9.17	9.53	10.1	5.75	11	8.71	9.53	9.85	19.0	9.99	19.3	10.1	19.7	20.0	20.1	21.0
	LV Amps	45.8	45.8	45.8	25.0	45.8	22.9	22.9	22.9	43.8	22.9	43.8	22.9	43.8	43.8	43.8	43.8
Q1C5DTCF	HV Amps	62.5	62.5	62.5	31.3	62.5	31.3	31.3	31.3	62.5	31.3	62.5	31.3	62.5	62.5	62.5	62.5
	KVA	13.8	14.3	15.1	8.6	16.5	13.1	14.3	14.8	28.5	15.0	28.9	15.1	29.5	29.9	30.2	31.5
	LV Amps	68.8	68.8	68.8	37.5	68.8	34.4	34.4	34.4	65.6	34.4	65.6	34.4	65.6	65.6	65.6	65.6
Q002DTCF	HV Amps	83.3	83.3	83.3	41.7	83.3	41.7	41.7	41.7	83.3	41.7	83.3	41.7	83.3	83.3	83.3	83.3
	KVA	18.3	19.1	20.2	11.5	22.0	17.4	19.1	19.7	38.1	20.0	38.5	20.2	39.4	39.9	40.3	42.0
	LV Amps	91.7	91.7	91.7	50.0	91.7	45.8	45.8	45.8	87.5	45.8	87.5	45.8	87.5	87.5	87.5	87.5
Q003DTCF	HV Amps	125	125	125	62.5	125	62.5	62.5	62.5	125	62.5	125	62.5	125	125	125	125
	KVA	27.5	28.6	30.3	17.3	33	26.1	28.6	29.6	57.1	30.0	57.8	30.3	59.1	59.9	60.4	63.0
	LV Amps	138	138	138	75	138	68.8	68.8	68.8	131	68.8	131	68.8	131	131	131	131
Q005DTCF	HV Amps	208	208	208	104	208	104	104	104	208	104	208	104	208	208	208	208
	KVA	45.8	47.7	50.4	28.8	55.0	43.5	47.7	49.3	95.2	50.0	96.3	50.4	98.4	99.8	101	105
	LV Amps	229	229	229	125	229	115	115	115	219	115	219	115	219	219	219	219
CONNECTION DIAGRAM		1	1	1	2	1	4	4	4	3	4	3	4	3	3	3	3

© Hammond Power Solutions Inc.
Data subject to change without notice.

How to use the Selection Chart

1. From the top row of the **"Selection Chart"** locate the high and low voltage combination that is closest to the one you require.
2. Determine the quantity you required.
3. The corresponding connection diagram is indicated at the top of the Voltage / kVA column. See page 94 for the connection diagrams.
4. Move down that column to the kVA or Ampere rating equal to or greater than the rating required by the load.
5. From the far left column, obtain the transformer catalog number.
6. For dimensional information refer to the specifications table (Group A) on page 91.

Three Phase - Group A Selection Chart

Catalog Number	Low Voltage / High Voltage	189 / 208	198 / 208	208 / 218	208 / 229	220 / 242	227 / 250	228 / 239	232 / 255	240 / 264	189 / 109 / 208 / 120	199 / 115 / 239 / 138	208 / 120 / 229 / 132	379 / 219 / 417 / 241	416 / 240 / 436 / 252	416 / 240 / 457 / 264
QUANTITY REQUIRED		2	2	2	2	2	2	2	2	2	3	3	3	3	3	3
CONNECTION DIAGRAM (Refer to Page 94)		7	8	8	7	7	7	8	7	7	10	9	10	12	11	12
Three Phase Connection Style		Delta Connected									Wye Connected					
QC05ERCB	HV Amps	2.08	4.17	4.17	2.08	2.08	2.08	4.17	2.08	2.08	4.17	2.08	4.17	2.08	4.17	2.08
	KVA	0.76	1.51	1.58	0.83	0.88	0.91	1.73	0.93	0.96	1.50	0.86	1.65	1.51	3.15	1.65
	LV Amps	2.29	4.38	4.38	2.29	2.29	2.29	4.38	2.29	2.29	4.58	2.50	4.58	2.29	4.38	2.29
QC10ERCB	HV Amps	4.17	8.33	8.33	4.17	4.17	4.17	8.33	4.17	4.17	8.33	4.17	8.33	4.17	8.33	4.17
	KVA	1.51	3.01	3.16	1.66	1.75	1.81	3.46	1.85	1.91	3.00	1.73	3.30	3.01	6.30	3.30
	LV Amps	4.58	8.75	8.75	4.58	4.58	4.58	8.75	4.58	4.58	9.17	5.00	9.17	4.58	8.75	4.58
QC15ERCB	HV Amps	6.25	12.50	12.50	6.25	6.25	6.25	12.50	6.25	6.25	12.5	6.25	12.5	6.25	12.50	6.25
	KVA	2.26	4.51	4.73	2.48	2.62	2.71	5.19	2.77	2.86	4.50	2.59	4.95	4.52	9.45	4.95
	LV Amps	6.88	13.10	13.10	6.88	6.88	6.88	13.10	6.88	6.88	13.8	7.50	13.8	6.88	13.1	6.88
QC20ERCB	HV Amps	8.33	16.70	16.70	8.33	8.33	8.33	16.70	8.33	8.33	16.7	8.33	16.7	8.33	16.70	8.33
	KVA	3.01	6.01	6.31	3.31	3.50	3.61	6.92	3.69	3.82	6.00	3.45	6.60	6.03	12.6	6.60
	LV Amps	9.17	17.50	17.50	9.17	9.17	9.17	17.50	9.17	9.17	18.3	10.0	18.3	9.17	17.5	9.17
QC25ERCB	HV Amps	10.4	20.8	20.8	10.4	10.4	10.4	20.8	10.4	10.4	20.8	10.4	20.8	10.4	20.8	10.4
	KVA	3.76	7.51	7.89	4.13	4.37	4.51	8.64	4.61	4.77	7.50	4.31	8.25	7.53	15.75	8.25
	LV Amps	11.5	21.9	21.9	11.5	11.5	11.5	21.9	11.5	11.5	22.9	12.5	22.9	11.5	21.9	11.5
QC35ERCB	HV Amps	14.6	29.2	29.2	14.6	14.6	14.6	29.2	14.6	14.6	29.2	14.6	29.2	14.6	29.2	14.6
	KVA	5.26	10.50	11.00	5.78	6.12	6.31	12.10	6.45	6.67	10.50	6.04	11.55	10.54	22.05	11.60
	LV Amps	16.0	30.6	30.6	16.0	16.0	16.0	30.6	16.0	16.0	32.1	17.5	32.1	16.0	30.6	16.0
QC50ERCB	HV Amps	20.8	41.7	41.7	20.8	20.8	20.8	41.7	20.8	20.8	41.7	20.8	41.7	20.8	41.7	20.8
	KVA	7.51	15.00	15.80	8.26	8.74	9.02	17.30	9.21	9.53	15.0	8.60	16.5	15.1	31.5	16.5
	LV Amps	22.9	43.8	43.8	22.9	22.9	22.9	43.8	22.9	22.9	45.8	25.0	45.8	22.9	43.8	22.9
QC75ERCB	HV Amps	31.3	62.5	62.5	31.3	31.3	31.3	62.5	31.3	31.3	62.5	31.3	62.5	31.3	62.5	31.3
	KVA	11.3	22.5	23.7	12.4	13.1	13.5	25.9	13.8	14.3	22.5	12.9	24.8	22.6	47.3	24.8
	LV Amps	34.4	65.6	65.6	34.4	34.4	34.4	65.6	34.4	34.4	68.8	37.5	68.8	34.4	65.6	34.4
Q1C0ERCB	HV Amps	41.7	83.3	83.3	41.7	41.7	41.7	83.3	41.7	41.7	83.3	41.7	83.3	41.7	83.3	41.7
	KVA	15.0	30.0	31.5	16.5	17.5	18.0	34.6	18.4	19.1	30.0	17.3	33.0	30.1	63.0	33.0
	LV Amps	45.8	87.5	87.5	45.8	45.8	45.8	87.5	45.8	45.8	91.7	50.0	91.7	45.8	87.5	45.8
Q1C5ERCF	HV Amps	62.5	125.0	125.0	62.5	62.5	62.5	125.0	62.5	62.5	125	62.5	125	62.5	125.0	62.5
	KVA	22.5	45.0	47.3	24.8	26.2	27.0	51.8	27.6	28.6	45.0	25.9	49.5	45.2	94.5	49.5
	LV Amps	68.8	131.0	131.0	68.8	68.8	68.8	131.0	68.8	68.8	138	75.0	138	68.8	131	68.8
Q002ERCF	HV Amps	83.3	167.0	167.0	83.3	83.3	83.3	167.0	83.3	83.3	167	83.3	167	83.3	167.0	83.3
	KVA	30.0	60.0	63.1	33.0	34.9	36.1	69.1	36.8	38.1	60.0	34.5	66.0	60.3	126	66.0
	LV Amps	91.7	175.0	175.0	91.7	91.7	91.7	175.0	91.7	91.7	183	100	183	91.7	175	91.7
Q003ERCF	HV Amps	125	250	250	125	125	125	250	125	125	250	125	250	125	250	125
	KVA	45.0	90.0	94.6	49.5	52.4	54.1	103.7	55.3	57.2	90.0	51.8	99.0	90.4	189	99.0
	LV Amps	138	263	263	138	138	138	263	138	138	275	150	275	138	263	138
Q005ERCF	HV Amps	208	417	417	208	208	208	417	208	208	417	208	417	208	417	208
	KVA	75.0	150.0	157.6	82.6	87.3	90.1	172.8	92.1	95.3	150	86.3	165	151	315	165
	LV Amps	229	438	438	229	229	229	438	229	229	458	250	458	229	438	229

© Hammond Power Solutions Inc.
Data subject to change without notice.

How to use the Selection Chart

1. From the top row of the **"Selection Chart"** locate the high and low voltage combination that is closest to the one you require.
2. Determine the quantity you required.
3. The corresponding connection diagram is indicated at the top of the Voltage / kVA column. See page 94 for the connection diagrams.
4. Move down that column to the kVA or Ampere rating equal to or greater than the rating required by the load.
5. From the far left column, obtain the transformer catalog number.
6. For dimensional information refer to the specifications table (Group B) on page 92.

Three Phase - Group B Selection Chart

Catalog Number	Low Voltage / High Voltage	184 / 209	195 / 208	208 / 222	208 / 236	225 / 240	230 / 245	234 / 250	234 / 265	240 / 272	240 / 256	184 / 106 / 208 / 120	416 / 240 / 236 / 136	379 / 219 / 431 / 249	416 / 240 / 443 / 256	416 / 240 / 471 / 272
QUANTITY REQUIRED		2	2	2	2	2	2	2	2	2	2	3	3	3	3	3
CONNECTION DIAGRAM (Refer to Page 94)		7	8	8	7	8	8	8	7	7	8	10	10	12	11	12
Three Phase Connection Style		Delta Connected										Wye Connected				
QC05ESCB	HV Amps	1.56	3.13	3.13	1.56	3.13	3.13	3.13	1.56	1.56	3.13	3.13	3.13	1.56	3.13	1.56
	KVA	0.57	1.13	1.21	0.64	1.30	1.33	1.36	0.72	0.74	1.39	1.13	1.28	1.17	2.40	1.28
	LV Amps	1.77	3.33	3.33	1.77	3.33	3.33	3.33	1.77	1.77	3.33	3.54	3.54	1.77	3.33	1.77
QC10ESCB	HV Amps	3.13	6.25	6.25	3.13	6.25	6.25	6.25	3.13	3.13	6.25	6.25	6.25	3.13	6.25	3.13
	KVA	1.13	2.26	2.41	1.28	2.60	2.66	2.71	1.44	1.48	2.78	2.25	2.55	2.33	4.80	2.55
	LV Amps	3.54	6.67	6.67	3.54	6.67	6.67	6.67	3.54	3.54	6.67	7.08	7.08	3.54	6.67	3.54
QC15ESCB	HV Amps	4.69	9.38	9.38	4.69	9.38	9.38	9.38	4.69	4.69	9.38	9.38	9.38	4.69	9.4	4.69
	KVA	1.70	3.38	3.61	1.92	3.90	3.99	4.06	2.16	2.21	4.16	3.38	3.83	3.50	7.20	3.83
	LV Amps	5.31	10.00	10.00	5.31	10.00	10.00	10.00	5.31	5.31	10.00	10.6	10.6	5.31	10.0	5.31
QC20ESCB	HV Amps	6.25	12.50	12.50	6.25	12.50	12.50	12.50	6.25	6.25	12.50	12.5	12.5	6.25	12.50	6.25
	KVA	2.26	4.51	4.81	2.56	5.20	5.32	5.41	2.88	2.94	5.55	4.50	5.10	4.67	9.60	5.10
	LV Amps	7.08	13.30	13.30	7.08	13.30	13.30	13.30	7.08	7.08	13.30	14.2	14.2	7.08	13.3	7.08
QC25ESCB	HV Amps	7.81	15.60	15.60	7.80	15.60	15.60	15.60	7.81	7.81	15.60	15.6	15.6	7.81	15.6	7.81
	KVA	2.83	5.63	6.01	3.19	6.50	6.64	6.76	3.59	3.69	6.93	5.63	6.38	5.84	12.0	6.38
	LV Amps	8.85	16.70	16.70	8.90	16.70	16.70	16.70	8.85	8.85	16.70	17.7	17.7	8.85	16.7	8.85
QC35ESCB	HV Amps	10.9	21.9	21.9	10.9	21.9	21.9	21.9	10.9	10.9	21.9	21.9	21.9	10.9	21.9	10.9
	KVA	3.96	7.89	8.41	4.47	9.10	9.30	9.46	5.03	5.16	9.70	7.88	8.93	8.17	16.8	8.93
	LV Amps	12.4	23.3	23.3	12.4	23.3	23.3	23.3	12.4	12.4	23.3	24.8	24.8	12.4	23.3	12.4
QC50ESCB	HV Amps	15.6	31.3	31.3	15.6	31.3	31.3	31.3	15.6	15.6	31.3	31.3	31.3	15.6	31.3	15.6
	KVA	5.65	11.30	12.00	6.38	13.00	13.30	13.50	7.18	7.37	13.90	11.3	12.8	11.7	24.0	12.8
	LV Amps	17.7	33.3	33.3	17.7	33.3	33.3	33.3	17.7	17.7	33.3	35.4	35.4	17.7	33.3	17.7
QC75ESCB	HV Amps	23.4	46.9	46.9	23.4	46.9	46.9	46.9	23.4	23.4	46.9	46.9	46.9	23.4	46.9	23.4
	KVA	8.47	16.90	18.00	9.57	19.5	19.9	20.3	10.8	11.1	20.8	16.9	19.1	17.5	36.0	19.1
	LV Amps	26.6	50.0	50.0	26.6	50.0	50.0	50.0	26.6	26.6	50.0	53.1	53.1	26.6	50.0	26.6
Q1C0ESCB	HV Amps	31.3	62.5	62.5	31.3	62.5	62.5	62.5	31.3	31.3	62.5	62.5	62.5	31.3	62.5	31.3
	KVA	11.3	22.5	24.0	12.8	26.0	26.6	27.0	14.4	14.7	27.7	22.5	25.5	23.3	48.0	25.5
	LV Amps	35.4	66.7	66.7	35.4	66.7	66.7	66.7	35.4	35.4	66.7	70.8	70.8	35.4	66.7	35.4
Q1C5ESCF	HV Amps	46.9	93.8	93.8	46.9	93.8	93.8	93.8	46.9	46.9	93.8	93.8	93.8	46.9	93.8	46.9
	KVA	16.9	33.8	36.0	19.1	39.0	39.8	40.5	21.5	22.1	41.6	33.8	38.3	35.0	72.0	38.3
	LV Amps	53.1	100.0	100.0	53.1	100.0	100.0	100.0	53.1	53.1	100.0	106	106	53.1	100	53.1
Q002ESCF	HV Amps	62.5	125.0	125.0	62.5	125.0	125.0	125.0	62.5	62.5	125.0	125	125	62.5	125.0	62.5
	KVA	22.6	45.0	48.0	25.5	52.0	53.1	54.0	28.7	29.4	55.4	45.0	51.0	46.7	96.0	51.0
	LV Amps	70.8	133.3	133.3	70.8	133.3	133.3	133.3	70.8	70.8	133.3	142	142	70.8	133	70.8
Q003ESCF	HV Amps	93.75	187.5	187.5	93.75	187.5	187.5	187.5	93.75	93.75	187.5	188	188	93.8	188	93.8
	KVA	33.9	67.6	72.1	38.3	78.0	79.7	81.1	43.1	44.2	83.1	67.5	76.5	70.0	144	76.5
	LV Amps	106.3	200	200	106.3	200	200	200	106.3	106.3	200	213	213	106	200	106
Q005ESCF	HV Amps	156.25	312.5	312.5	156.25	313	312.5	312.5	156.25	156.25	312.5	313	313	156	313	156
	KVA	56.4	112.6	120.1	63.8	129.9	132.8	135.1	71.8	73.6	138.6	113	128	117	240	128
	LV Amps	177.1	333.3	333.3	177.1	333.3	333.3	333.3	177.1	177.1	333.3	354	354	177	333	177

© Hammond Power Solutions Inc.

Data subject to change without notice.

How to use the Selection Chart

1. From the top row of the **"Selection Chart"** locate the high and low voltage combination that is closest to the one you require.
2. Determine the quantity you required.
3. The corresponding connection diagram is indicated at the top of the Voltage / kVA column. See page 94 for the connection diagrams.
4. Move down that column to the kVA or Ampere rating equal to or greater than the rating required by the load.
5. From the far left column, obtain the transformer catalog number.
6. For dimensional information refer to the specifications table (Group C) on page 92.

Three Phase - Group C Selection Chart

Catalog Number	Low Voltage	173	200	208	362	380	400	419	436	457	480	480	346	379	400	416
													200	219	231	240
	High Voltage	208	240	250	380	418	440	440	480	480	528	504	416	456	480	499
													240	263	277	288
QUANTITY REQUIRED		2	2	2	2	2	2	2	2	2	2	2	3	3	3	3
CONNECTION DIAGRAM (Refer to Page 94)		5	5	5	6	7	7	8	7	8	7	8	9	9	9	9
Three Phase Connection Style		Delta Connected											Wye Connected			
QC05DTCB	HV Amps	1.04	1.04	1.04	2.08	1.04	1.04	2.08	1.04	2.08	1.04	2.08	1.04	1.04	1.04	1.04
	KVA	0.38	0.44	0.46	1.44	0.76	0.80	1.67	0.87	1.82	0.96	1.82	0.75	0.82	0.87	0.90
	LV Amps	1.25	1.25	1.25	2.29	1.15	1.15	2.29	1.15	2.29	1.15	2.19	1.25	1.25	1.25	1.15
QC10DTCB	HV Amps	2.08	2.08	2.08	4.17	2.08	2.08	4.17	2.08	4.17	2.08	4.17	2.08	2.08	2.08	2.08
	KVA	0.75	0.87	0.91	2.88	1.51	1.59	3.33	1.74	3.63	1.91	3.64	1.50	1.64	1.73	1.80
	LV Amps	2.50	2.50	2.50	4.58	2.29	2.29	4.58	2.29	4.58	2.29	4.38	2.50	2.50	2.50	2.50
QC15DTCB	HV Amps	3.13	3.13	3.13	6.25	3.13	3.13	6.25	3.13	6.25	3.13	6.25	3.13	3.13	3.13	3.13
	KVA	1.13	1.30	1.36	4.32	2.27	2.39	4.99	2.60	5.45	2.86	5.46	2.25	2.47	2.60	2.70
	LV Amps	3.75	3.75	3.75	6.88	3.44	3.44	6.88	3.44	6.88	3.44	6.56	3.75	3.75	3.75	3.75
QC20DTCB	HV Amps	4.17	4.17	4.17	8.33	4.17	4.17	8.33	4.17	8.33	4.17	8.33	4.17	4.17	4.17	4.17
	KVA	1.50	1.74	1.81	5.75	3.02	3.18	6.66	3.47	7.26	3.82	7.28	3.00	3.29	3.46	3.60
	LV Amps	5.00	5.00	5.00	9.17	4.58	4.58	9.17	4.58	9.17	4.58	8.75	5.00	5.00	5.00	5.00
QC25DTCB	HV Amps	5.21	5.21	5.21	10.4	5.21	5.21	10.40	5.21	10.40	5.21	10.40	5.21	5.21	5.21	5.21
	KVA	1.88	2.17	2.26	7.19	3.78	3.97	8.32	4.33	9.07	4.77	9.10	3.75	4.11	4.33	4.50
	LV Amps	6.25	6.25	6.25	11.50	5.73	5.73	11.50	5.73	11.50	5.73	10.90	6.25	6.25	6.25	6.25
QC35DTCB	HV Amps	7.29	7.29	7.29	14.6	7.29	7.3	14.6	7.3	14.6	7.29	14.6	7.29	7.29	7.29	7.29
	KVA	2.63	3.04	3.16	10.1	5.28	5.56	11.70	6.06	12.70	6.67	12.70	5.25	5.75	6.06	6.30
	LV Amps	8.75	8.75	8.75	16.0	8.0	8.0	16.0	8.0	16.0	8.02	15.3	8.75	8.75	8.75	8.75
QC50DTCB	HV Amps	10.4	10.4	10.4	20.8	10.4	10.4	20.8	10.4	20.8	10.4	20.8	10.4	10.4	10.4	10.4
	KVA	3.75	4.34	4.51	14.4	7.55	7.94	16.60	8.66	18.10	9.53	18.20	7.50	8.22	8.66	9.00
	LV Amps	12.5	12.5	12.5	22.9	11.5	11.5	22.9	11.5	22.9	11.5	21.9	12.5	12.5	12.5	12.5
QC75DTCB	HV Amps	15.6	15.6	15.6	31.3	15.6	15.6	31.3	15.6	31.3	15.6	31.3	15.6	15.6	15.6	15.6
	KVA	5.62	6.50	6.76	21.6	11.3	11.9	25.0	13.0	27.2	14.3	27.3	11.3	12.3	13.0	13.5
	LV Amps	18.8	18.8	18.8	34.4	17.2	17.2	34.4	17.2	34.4	17.2	32.8	18.8	18.8	18.8	18.8
Q1C0DTCB	HV Amps	20.8	20.8	20.8	41.7	20.8	20.8	41.7	20.8	41.7	20.8	41.7	20.8	20.8	20.8	20.8
	KVA	7.50	8.67	9.01	28.7	15.1	15.9	33.3	17.3	36.3	19.1	36.4	15.0	16.4	17.3	18.0
	LV Amps	25.0	25.0	25.0	45.8	22.9	22.9	45.8	22.9	45.8	22.9	43.8	25.0	25.0	25.0	25.0
Q1C5DTCF	HV Amps	31.3	31.3	31.3	62.5	31.3	31.3	62.5	31.3	62.5	31.3	62.5	31.3	31.3	31.3	31.3
	KVA	11.2	13.0	13.5	43.1	22.6	23.8	49.9	26.0	54.4	28.6	54.6	22.5	24.7	26.0	27.0
	LV Amps	37.5	37.5	37.5	68.8	34.4	34.4	68.8	34.4	68.8	34.4	65.6	37.5	37.5	37.5	37.5
Q002DTCF	HV Amps	41.7	41.7	41.7	83.3	41.7	41.7	83.3	41.7	83.8	41.7	83.3	41.7	41.7	41.7	41.7
	KVA	15.0	17.3	18.0	57.5	30.2	31.8	66.5	34.6	72.6	38.1	72.8	30.0	32.9	34.6	36.0
	LV Amps	50.0	50.0	50.0	91.7	45.8	45.8	91.7	45.8	91.7	45.8	87.5	50.0	50.0	50.0	50.0
Q003DTCF	HV Amps	62.5	62.5	62.5	125	62.5	62.5	125.0	62.5	125.0	62.5	125.0	62.5	62.5	62.5	62.5
	KVA	22.5	26.0	27.0	86.2	45.3	47.6	99.8	51.9	109.0	57.2	109.0	45.0	49.3	51.9	54.0
	LV Amps	75.0	75.0	75.0	138	68.8	68.8	138.0	68.8	138.0	68.8	131.0	75.0	75.0	75.0	75.0
Q005DTCF	HV Amps	104	104	104	208	104	104	208	104	208	104	208	104	104	104	104
	KVA	37.5	43.3	45.0	144.0	75.4	79.4	166.0	86.5	181.0	95.3	182.0	75.0	82.2	86.6	90.0
	LV Amps	125	125	125	229	115	115	229	115	229	115	219	125	125	125	125

© Hammond Power Solutions Inc.
Data subject to change without notice.

Single Phase Specification Tables

Group A

Primary Voltage	120 X 240
Secondary Voltage	12 X 24

50/60 Hertz

VA	Catalog Number	Case Style (Pages 262)	Approx. Dimensions (Inches) Width	Depth	Height	Approx. Weight (Lbs.)	Mtg Type W - Wall
50	**QC05ERCB**	NQ0	3.75	5.25	7.25	6	W
100	**QC10ERCB**	NQ0	3.75	5.25	7.25	7	W
150	**QC15ERCB**	NQ0	3.75	5.25	7.25	8	W
200	**QC20ERCB**	NQ1	4.50	5.75	7.25	11	W
250	**QC25ERCB**	NQ1	4.50	5.75	7.25	13	W
350	**QC35ERCB**	NQ1	4.50	5.75	7.25	14	W
500	**QC50ERCB**	NQ2	5.00	4.75	9.25	15	W
750	**QC75ERCB**	NQ2	5.00	4.75	9.25	18	W
1000	**Q1C0ERCB**	NQ3	5.88	5.50	10.50	25	W
1500	**Q1C5ERCF**	NQ4	7.00	6.50	11.75	36	W
2000	**Q002ERCF**	NQ4	7.00	6.50	11.75	46	W
3000	**Q003ERCF**	NQ5	10.00	7.75	17.25	65	W
5000	**Q005ERCF**	NQ5	10.00	7.75	17.25	105	W

Group B

Primary Voltage	120 X 240
Secondary Voltage	16 X 32

50/60 Hertz

VA	Catalog Number	Case Style (Pages 262)	Approx. Dimensions (Inches) Width	Depth	Height	Approx. Weight (Lbs.)	Mtg Type W - Wall
50	**QC05ESCB**	NQ0	3.75	5.25	7.25	6	W
100	**QC10ESCB**	NQ0	3.75	5.25	7.25	7	W
150	**QC15ESCB**	NQ0	3.75	5.25	7.25	8	W
200	**QC20ESCB**	NQ1	4.50	5.75	7.25	11	W
250	**QC25ESCB**	NQ1	4.50	5.75	7.25	13	W
350	**QC35ESCB**	NQ1	4.50	5.75	7.25	14	W
500	**QC50ESCB**	NQ2	5.00	4.75	9.25	15	W
750	**QC75ESCB**	NQ2	5.00	4.75	9.25	18	W
1000	**Q1C0ESCB**	NQ3	5.88	5.50	10.50	25	W
1500	**Q1C5ESCF**	NQ4	7.00	6.50	11.75	36	W
2000	**Q002ESCF**	NQ4	7.00	6.50	11.75	46	W
3000	**Q003ESCF**	NQ5	10.00	7.75	17.25	65	W
5000	**Q005ESCF**	NQ5	10.00	7.75	17.25	105	W

© Hammond Power Solutions Inc.
Data subject to change without notice.

Single Phase Specification Tables

Group C

Primary Voltage	240 X 480
Secondary Voltage	24 X 48

50/60 Hertz

VA	Catalog Number	Case Style (Pages 262)	Approx. Dimensions (Inches) Width	Depth	Height	Approx. Weight (Lbs.)	Mtg Type W - Wall
50	**QC05DTCB**	NQ0	3.75	5.25	7.25	6	W
100	**QC10DTCB**	NQ0	3.75	5.25	7.25	7	W
150	**QC15DTCB**	NQ0	3.75	5.25	7.25	8	W
200	**QC20DTCB**	NQ1	4.50	5.75	7.25	11	W
250	**QC25DTCB**	NQ1	4.50	5.75	7.25	13	W
350	**QC35DTCB**	NQ1	4.50	5.75	7.25	14	W
500	**QC50DTCB**	NQ2	5.00	4.75	9.25	15	W
750	**QC75DTCB**	NQ2	5.00	4.75	9.25	18	W
1000	**Q1C0DTCB**	NQ3	5.88	5.50	10.50	25	W
1500	**Q1C5DTCF**	NQ4	7.00	6.50	11.75	36	W
2000	**Q002DTCF**	NQ4	7.00	6.50	11.75	46	W
3000	**Q003DTCF**	NQ5	10.00	7.75	17.25	65	W
5000	**Q005DTCF**	NQ5	10.00	7.75	17.25	105	W

Three Phase Specification Tables

Group A

Primary Voltage	120 X 240
Secondary Voltage	12 X 24

50/60 Hertz

VA	Catalog Number	Case Style (Pages 262)	Approx. Dimensions (Inches) Width	Depth	Height	Approx. Weight (Lbs.)	Mtg Type W - Wall
50	**QC05ERCB**	NQ0	3.75	5.25	7.25	6	W
100	**QC10ERCB**	NQ0	3.75	5.25	7.25	7	W
150	**QC15ERCB**	NQ0	3.75	5.25	7.25	8	W
200	**QC20ERCB**	NQ1	4.50	5.75	7.25	11	W
250	**QC25ERCB**	NQ1	4.50	5.75	7.25	13	W
350	**QC35ERCB**	NQ1	4.50	5.75	7.25	14	W
500	**QC50ERCB**	NQ2	5.00	4.75	9.25	15	W
750	**QC75ERCB**	NQ2	5.00	4.75	9.25	18	W
1000	**Q1C0ERCB**	NQ3	5.88	5.50	10.50	25	W
1500	**Q1C5ERCF**	NQ4	7.00	6.50	11.75	36	W
2000	**Q002ERCF**	NQ4	7.00	6.50	11.75	46	W
3000	**Q003ERCF**	NQ5	10.00	7.75	17.25	65	W
5000	**Q005ERCF**	NQ5	10.00	7.75	17.25	105	W

© Hammond Power Solutions Inc.
Data subject to change without notice.

Three Phase Specification Tables

Group B

Primary Voltage	120 X 240
Secondary Voltage	16 X 32

50/60 Hertz

VA	Catalog Number	Case Style (Pages 262)	Approx. Dimensions (Inches) Width	Depth	Height	Approx. Weight (Lbs.)	Mtg Type W - Wall
50	**QC05ESCB**	NQ0	3.75	5.25	7.25	6	W
100	**QC10ESCB**	NQ0	3.75	5.25	7.25	7	W
150	**QC15ESCB**	NQ0	3.75	5.25	7.25	8	W
200	**QC20ESCB**	NQ1	4.50	5.75	7.25	11	W
250	**QC25ESCB**	NQ1	4.50	5.75	7.25	13	W
350	**QC35ESCB**	NQ1	4.50	5.75	7.25	14	W
500	**QC50ESCB**	NQ2	5.00	4.75	9.25	15	W
750	**QC75ESCB**	NQ2	5.00	4.75	9.25	18	W
1000	**Q1C0ESCB**	NQ3	5.88	5.50	10.50	25	W
1500	**Q1C5ESCF**	NQ4	7.00	6.50	11.75	36	W
2000	**Q002ESCF**	NQ4	7.00	6.50	11.75	46	W
3000	**Q003ESCF**	NQ5	10.00	7.75	17.25	65	W
5000	**Q005ESCF**	NQ5	10.00	7.75	17.25	105	W

Group C

Primary Voltage	240 X 480
Secondary Voltage	24 X 48

50/60 Hertz

VA	Catalog Number	Case Style (Pages 262)	Approx. Dimensions (Inches) Width	Depth	Height	Approx. Weight (Lbs.)	Mtg Type W - Wall
50	**QC05DTCB**	NQ0	3.75	5.25	7.25	6	W
100	**QC10DTCB**	NQ0	3.75	5.25	7.25	7	W
150	**QC15DTCB**	NQ0	3.75	5.25	7.25	8	W
200	**QC20DTCB**	NQ1	4.50	5.75	7.25	11	W
250	**QC25DTCB**	NQ1	4.50	5.75	7.25	13	W
350	**QC35DTCB**	NQ1	4.50	5.75	7.25	14	W
500	**QC50DTCB**	NQ2	5.00	4.75	9.25	15	W
750	**QC75DTCB**	NQ2	5.00	4.75	9.25	18	W
1000	**Q1C0DTCB**	NQ3	5.88	5.50	10.50	25	W
1500	**Q1C5DTCF**	NQ4	7.00	6.50	11.75	36	W
2000	**Q002DTCF**	NQ4	7.00	6.50	11.75	46	W
3000	**Q003DTCF**	NQ5	10.00	7.75	17.25	65	W
5000	**Q005DTCF**	NQ5	10.00	7.75	17.25	105	W

© Hammond Power Solutions Inc.
Data subject to change without notice.

Single Phase Connection Diagrams

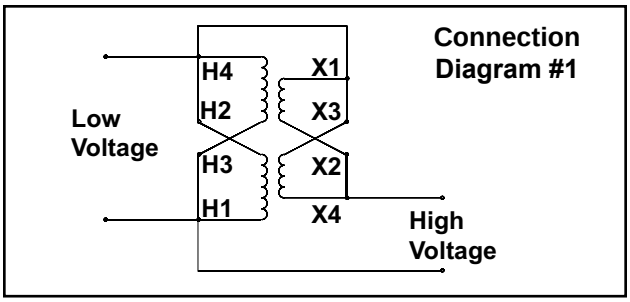

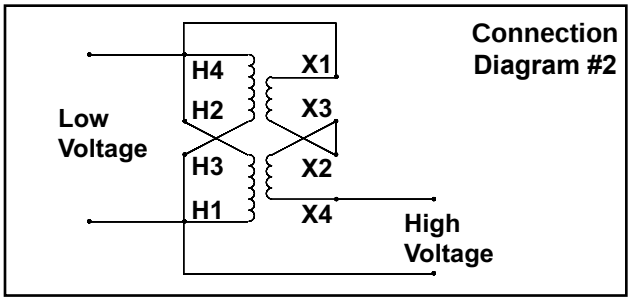

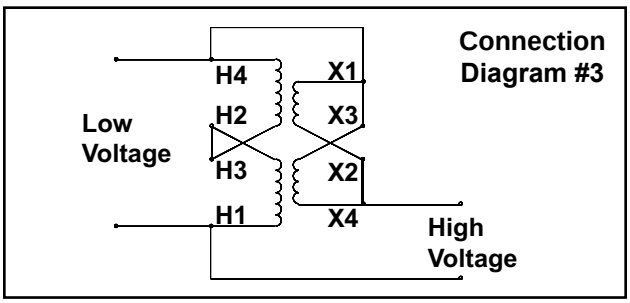

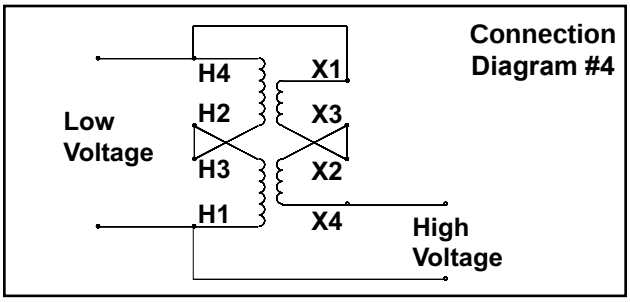

© Hammond Power Solutions Inc.
Data subject to change without notice.

Three Phase Connection Diagrams

Connection Diagram #5

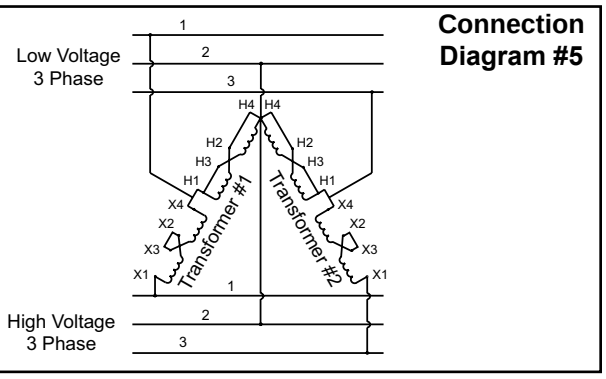

Connection Diagram #6

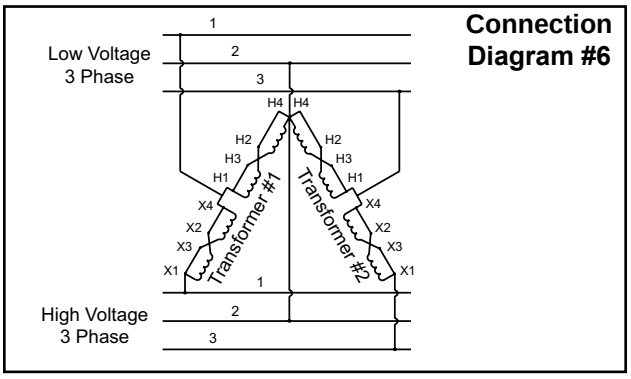

Connection Diagram #7

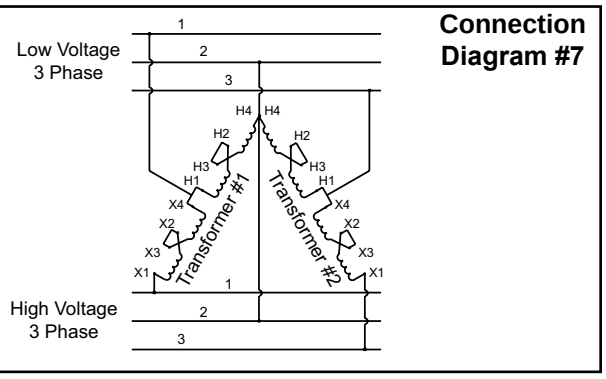

Connection Diagram #8

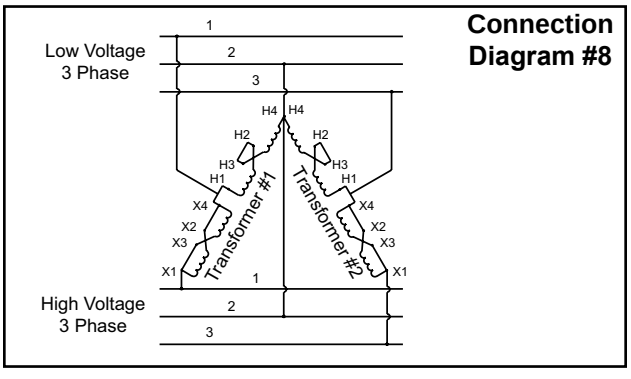

Connection Diagram #9

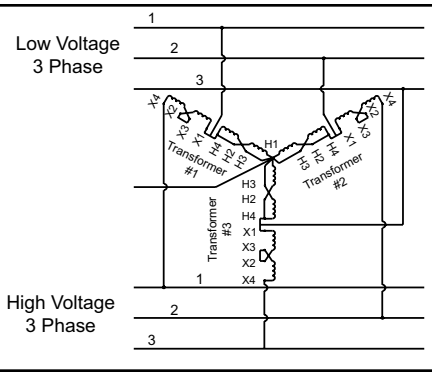

Connection Diagram #10

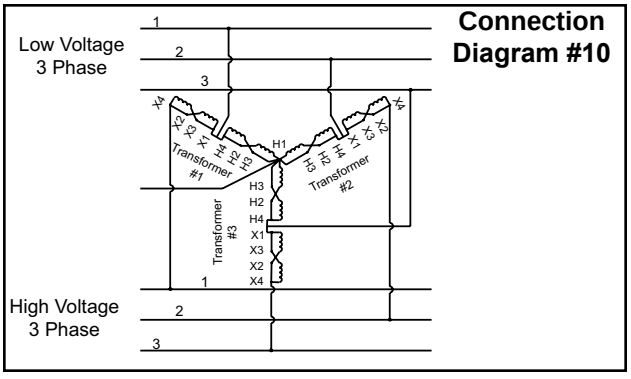

Connection Diagram #11

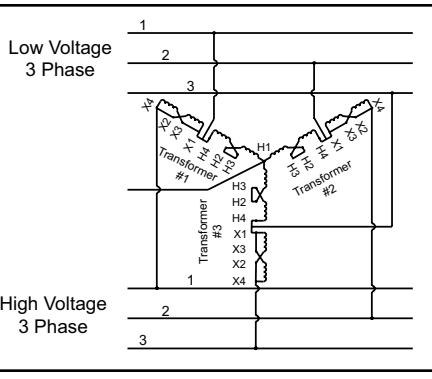

Connection Diagram #12

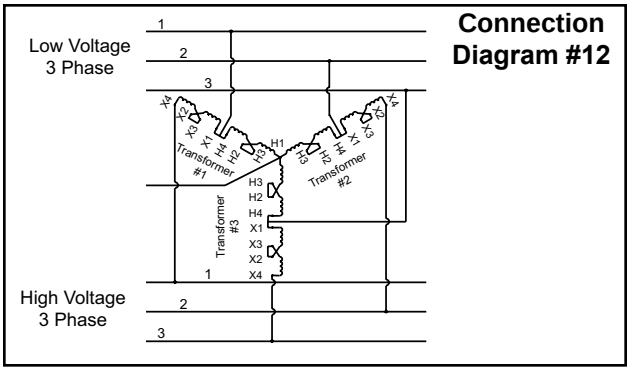

© Hammond Power Solutions Inc.

Data subject to change without notice.

Buck-Boost Transformers - Questions & Answers

1. What is a buck-boost transformer?

Buck-boost transformers are small single phase transformers designed to lower (buck) or raise (boost) line voltage from 5-20%. The most common applications for buck-boost transformers include boosting 208 volts to 230 or 240 volts for air conditioning systems, boosting 110 to 120 volts and 240 to 277 volts for lighting applications, heating systems and induction motors of all types. Many applications exist where supply voltages are frequently above or below nominal.

Buck-boost transformers are conventional low voltage, single phase distribution transformers, with standard primary voltages of 120, 240 or 480 volts, and secondary voltages of 12, 16, 24, 32 or 48 volts. They are available in sizes ranging from 50 VA to 10,000 VA. The primary and secondary are wired together to form a single-winding autotransformer. Utilizing the additive and subtractive polarity, small amounts of voltage are either added or subtracted from a distribution circuit.

2. How does a buck-boost transformer differ from an isolating transformer?

A buck-boost transformer is manufactured as an isolating transformer, with separable primary and secondary, and is shipped from the factory in that configuration. When the end user at site connects it, the primary is connected to the secondary changing the transformer's electrical characteristics to those of an autotransformer. This provides the smaller voltage correction that is typical of buck-boost. The primary and secondary windings are no longer isolated as they are connected together.

3. What is the difference between a buck-boost transformer and an autotransformer?

As noted above, when the primary and secondary are connected together to buck or boost voltage, the transformer becomes an autotransformer. If the connection between the primary and secondary winding is not made, then the unit remains as an isolation transformer.

Applications

4. Why are they used?

A buck-boost transformer is a simple and effective way of correcting off-standard voltages. Electrical and electronic equipment is designed to operate within a standard tolerance of nominal supply voltages. When the supply voltage is consistently too high or low - typically more than 10%, the equipment will operate below peak efficiency.

5. Can buck-boost transformers be used to power low voltage circuits?

Installed as two-winding, isolation transformers, these units can be used to power low voltage circuits including control, lighting circuits, or other low voltage applications that require 12, 16, 24, 32 or 48 volts output, consistent with the secondary of these designs. The unit is connected as an isolating transformer and the nameplate kVA rating is the transformer's capacity.

Operation and Construction

6. Why do buck-boost transformers have 4 windings?

A four winding buck-boost transformer with 2 primary and 2 secondary windings can be connected eight different ways to provide a multitude of voltages and KVA's. This provides the flexibility necessary for the broad variety of applications. A two-winding transformer can only be connected in two different ways.

© Hammond Power Solutions Inc.
Data subject to change without notice.

7. Will a Buck-Boost transformer stabilize voltage?

Buck-boost transformers will not stabilize supply line voltage. The output voltage of a buck-boost is a function of the input voltage. If the input voltage varies, then the output voltage will also vary by the same percentage.

Load Data

8. Are there any restrictions on the type of load that can be operated from a Buck-Boost transformer?

There are no restrictions as to application for Buck-Boost, including single or three-phase motor loads.

9. As an Autotransformer, how can a Buck-Boost transformer supply kVA power?

This is a function of adding voltage - a small amount of voltage is added and a small amount of corresponding power capacity is added as well. For example, if the transformer is connected in such a way that 22 volts is added to a 208 volt primary, a 230 volt output will result.

Using this example, the calculation for autotransformer kVA is as follows:

$$\text{kVA} = \frac{\text{Output Volts x Secondary Amps}}{1000}$$

$$\text{kVA} = \frac{\text{230V x 41.67 Amps}}{1000} = 9.58 \text{ KVA}$$

10. How are single phase and three phase load amps and load kVA calculated?

$$\text{Single phase Amps} = \frac{\text{kVA x 1000}}{\text{Volts}}$$

$$\text{Three phase Amps} = \frac{\text{kVA x 1000}}{\text{Volts x 1.73}}$$

$$\text{Single phase kVA} = \frac{\text{Volts x Amps}}{1000}$$

$$\text{Three phase kVA} = \frac{\text{Volts x Amps x 1.73}}{1000}$$

Three Phase

11. Can Buck-Boost transformers be used on three phase systems?

Interconnecting two or three single phase units will readily accommodate three phase systems - refer to the corresponding three phase section in this catalog. The number of units to be used in a three phase installation depends on the number of wires in the supply line. If the three phase supply is 4-wire wye, then three buck-boost transformers are required. If the three phase supply is 3-wire wye (neutral not available), two buck-boost transformers are needed.

12. Should Buck-Boost transformers be used to develop three phase 4 wire wye circuits from three phase 3 wire delta circuits?

No - a three-phase “wye” buck-boost transformer connection should be used only on a 4-wire source of supply. A delta to wye connection does not provide adequate current capacity to accommodate unbalanced currents flowing in the neutral wire of the 4-wire circuit.

© Hammond Power Solutions Inc.
Data subject to change without notice.

13. Why isn't a 'closed delta' Buck-Boost connection recommended?

This connection requires more kVA power than a "wye" or open delta connection and phase shifting occurs on the output. The closed delta connection is more expensive and electrically inferior to other three phase connections.

Connection and Frequency

14. How do you know how to connect a Buck-Boost transformer?

A connection chart is provided with each unit that shows how to make the corresponding connections. These same charts are also shown in this section.

15. Can 60 Hertz Buck-Boost transformers be operated on 50 Hertz?

Due to 'saturation' of the core, 60 Hertz buck-boost transformers should only be operated at 60 Hertz, and not 50 Hertz. Units manufactured as 50 Hertz units will however, operate at 60 Hertz.

Nameplate Data

17. Why are buck-boost transformers shipped from the factory connected as isolating transformers, and not pre-connected autotransformers?

The same 4-winding buck-boost transformer can be connected eight different ways to provide a multitude of voltage combinations. The correct connection can best be determined by the user when assessing the supply voltage at site.

18. Why is the isolation transformer kVA rating shown on the nameplate instead of the autotransformer kVA rating?

Shipped as an isolating transformer, the nameplate is required to show the performance characteristics accordingly. Additionally, as an autotransformer, the eight different combinations of voltages and kVA's would be impractical to list on the nameplate. A connection chart, listing the various connections, is included with each unit.

Safety

19. Do Buck-Boost transformers present a safety hazard compared to conventional autotransformers?

Buck-boost transformers only change voltage by a small amount, such as 208 to 240 volts. This small increase does not represent a safety hazard. Conventional autotransformers, manufactured as single winding transformers, change much higher magnitudes of voltage, e.g. 480 to 240 volts. In a system where the line is grounded, it is possible to have 480 volts to ground when the expectations are that 240 volts is at the output. For this reason, qualified personnel only should maintain conventional autotransformers.

Sound Levels

20. How does the sound level differ between Buck-Boost and isolation transformers?

Buck-boost transformers, connected as autotransformers, will be quieter than an equivalent isolation transformer capable of handling the same load. The isolation transformer would have to be physically larger than the buck-boost transformer, and smaller transformers are quieter than larger ones. For example, a 10 kVA is 35 dba and a 75 kVA is 50 dba.

© Hammond Power Solutions Inc.
Data subject to change without notice.

Cost and Life Expectancy

21. How does the costs compare between a Buck-Boost transformer and an Isolation transformer handling the same load?

For most buck-boost applications, the savings are about 75% compared to the use of an isolation transformer for the same application.

22. What is the life expectancy of a Buck-Boost transformer?

Buck-boost transformers have exactly the same life expectancy as other dry-type transformers.

23. Buck-Boost transformers are almost always installed as autotransformers. Does the National Electrical Code (NEC) permit the use of autotransformers?

Autotransformers are very common and recognized by all the safety and standard authorities. You can refer to N.E.C. Article 450-4, “Autotransformers 600 Volts, Nominal, or Less”, as a reference publication. Item (a) details overcurrent protection for an autotransformer and item (b) covers an isolation transformer being field connected as an autotransformer for a buck-boost application.

24. When a Buck-Boost transformer is connected as an autotransformer, what is the procedure for determining the current rating of the overcurrent protective device, such as the fuse or circuit breaker?

The NEC Article 450-4 outlines overcurrent protection for autotransformers. It is reproduced as follows: “NEC 450-4 - Autotransformers 600 Volts, Nominal, or Less

(a) Overcurrent Protection. Each autotransformer 600 volts, nominal, or less shall be protected by an individual overcurrent device installed in series with each ungrounded input conductor. Such overcurrent device shall be rated or set at not more than 125 percent of the rated full load input current of the autotransformer. An overcurrent device shall not be installed in series with the shunt winding.

Exception: Where the rated input current of an autotransformer is 9 amperes or more and 125 percent of this current does not correspond to a standard rating of a fuse or non-adjustable circuit breaker; the next higher standard rating described in our section shall be permitted. When the rated input current is less than 9 amperes, an overcurrent device rated or set at not more than 167 percent of the input current shall be permitted.

(b) Transformer Field-Connected as an autotransformer. A transformer field-connected as autotransformers shall be identified for use at “elevated voltage”.

Example: A 1 kVA transformer, Catalog No. Q1C0ERCB, is rated 120 x 240 to 12 x 24 volts. It is to be connected as an autotransformer to raise 208 to 230 volts single phase. When connected as an autotransformer in this application, the kVA rating is increased to 9.58 kVA, or 9,580 VA. This is the rating to be used for determining the full load input amps and the corresponding size of the overcurrent protection device, either a fuse or breaker.

Full load input amps = 9,580 Volt Amps = 46 Amp, 208 Volts

When the full load current is greater than 9 amps, the overcurrent protection device - usually a fuse or non-adjustable breaker, the current rating can be up to 125 percent of the full load rating of the autotransformer input current.

Max. current rating of the overcurrent device = 46 amps x 125% = 57.5 amps

The National Electrical Code, Article 450-4 (a) Exception, permits the use of the next higher standard ampere rating of the overcurrent device. This is shown in Article 240-6 of the N.E.C.

Max. size of the fuse or circuit breaker = 60 amps

© Hammond Power Solutions Inc.
Data subject to change without notice.

SECTION 3

RM SERIES LINE REACTORS & RC SERIES DV/DT FILTERS

Single and Three Phase

Why Choose a Line Reactor? 100

Construction Features 103

Standard RM Line Reactor Specifications 105

Part Number Guide 106

RM Line Reactor Selection Tables 106

RM Line Reactor Core & Coil Specification Tables 108

RM Line Reactor Enclosed Specification Tables 110

RM Reactor Application and Connection Diagrams 112

Termination Details 112

RM Line Reactor Cross Reference Guide 113

RC DV/DT Filter Applications 114

RC DV/DT Filter Specifications 115

RC DV/DT Filter Selection Table 116

RM Line Reactor Open Style Reference Drawings 117

RC DV/DT Filter Open Style Reference Drawings 118

Why Choose A Line Reactor?

Utilizing variable speed drives to control motor speed has impacted industry both in energy savings and increased efficiencies. The challenge for today's designers is dealing with non-linear wave shapes generated by solid state devices.

By choosing a HPS line reactor, many line problems can be eliminated. Additionally, performance, life expectancy and efficiency of both the motor and the drive itself are significantly enhanced.

ELIMINATE NUISANCE TRIPPING

Transients due to switching on the utility line and harmonics from the drive system can cause intermittent tripping of circuit breakers. Furthermore, modern switchgear, equipped with solid state trip sensing devices is designed to react to peak current rather than RMS current. As switching transients can peak over 1000 volts, the resulting overvoltage will cause undesirable interruptions. A reactor added to your circuit restricts the surge current by utilizing its inductive characteristics, and therefore eliminates nuisance tripping.

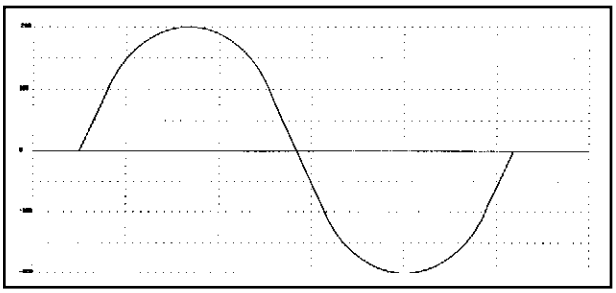

Normal sine wave from the utility supply.

EXTEND THE LIFE OF SWITCHING COMPONENTS

Due to the attenuation of line disturbances, the life of your solid state devices are extended when protected by the use of a HPS line reactor.

SATURATION

Due to the care in the selection of the core material with its optimum flux density, HPS line reactors will not saturate under the most adverse line conditions. Since the inductance is linear over a broader current range, equipment is protected even in extreme overcurrent circumstances.

EXTEND THE LIFE OF YOUR MOTOR

Line reactors, when selected for the output of your drive, will enhance the waveform and virtually eliminate failures due to output circuit faults. Subsequently, motor operating temperatures are reduced by 10 to 20 degrees and motor noise is reduced due to the removal of some of the high frequency harmonic currents.

LOW HEAT DISSIPATION

Particular attention has been focused on the design and field testing of this product line. The result is reactors with ideal operating features including low temperature rises and reduced losses. HPS reactors will operate efficiently and heat dissipation in your equipment will be of minimal concern.

© Hammond Power Solutions Inc.
Data subject to change without notice.

MINIMIZE HARMONIC DISTORTION

Non-linear current waveforms contain harmonic distortion. By using a HPS line reactor you can limit the inrush current to the rectifier in your drive. The peak current is reduced, the waveform is rounded and harmonic distortion is minimized. Current distortion typically is reduced to 30%.

Severe harmonic current distortion can also cause the system voltage to distort. Often, high peak harmonic current drawn by the drive, causes “flat-topping” of the voltage waveform. Adding a reactor controls the current component, and voltage harmonic distortion is therefore reduced.

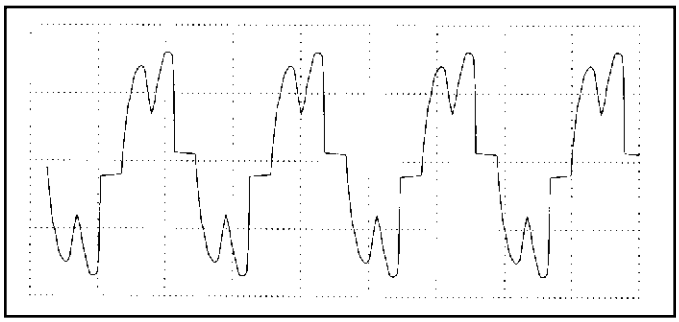

The total harmonic distortion of variable speed drives produces complex wave shapes such as the phase current shown above. The challenge for today’s designers is to effectively minimize these line problems.

SHORT CIRCUIT CAPABILITY

HPS line reactors can withstand current under short circuit conditions, reducing the potential of severe damage to electronic equipment. In a short circuit, the inductance of the coil is necessary to limit overcurrent after the core has saturated. HPS has extensive experience in designing and testing dry-type transformers to withstand short circuits for the most demanding applications, and this experience has been applied to line reactor design.

REDUCE LINE NOTCHING

Whenever AC power is converted to DC by a rectifier using a non-linear device, such as an SCR, the process of commutation occurs. The result is a notch in the voltage waveform. The number of notches is a function of both the number of pulses and the number of SCR’s in the rectifier.

Line reactors are used to provide the inductive reactance needed to reduce notching, which can adversely effect equipment operation.

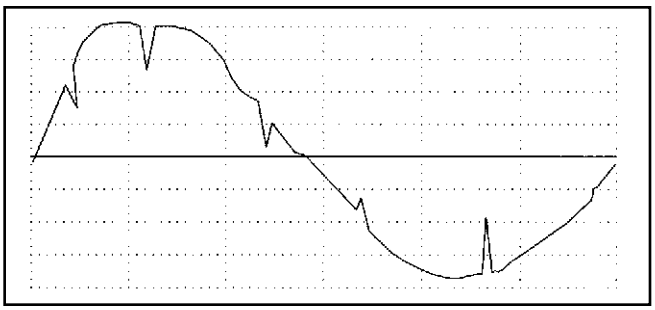

A voltage waveform illustrating line notching. Line reactors are used to provide the inductive reactance needed to reduce such notches.

© Hammond Power Solutions Inc.
Data subject to change without notice.

Why Choose A Line Reactor continued...

IMPEDANCE RATINGS

Definition:

$$\% Z = \frac{(VD \times 100)}{VS} \times \sqrt{3}$$

Z = IMPEDANCE (three phase)

VD = VOLTAGE DROP ACROSS REACTOR

VS = VOLTAGE SUPPLY FOR RATED CURRENT TO FLOW THROUGH REACTOR

SELECTION - 3% OR 5% IMPEDANCE REACTOR

Choose 3% impedance reactors to satisfy most solid state applications in North America. Reactors rated for 3% impedance are ideal for absorbing normal line spikes and motor current surges, and will prevent most nuisance line tripping of circuit protection devices or equipment.

Where considerably higher line disturbances are present, a 5% impedance reactor may be required. Additionally, if the application is overseas, or when it is necessary to comply to IEEE 519, the higher impedance reactor is recommended. These units may also be selected to further reduce harmonic current and frequencies if desirable or to both extend motor life or diminish motor noise.

LINE REACTORS OR DRIVE ISOLATION TRANSFORMERS ?

When true line isolation is required, such as limiting short circuit current, or where it is necessary to step up or step down voltage, use a drive isolation transformer. HPS carries an extensive line of drive isolation transformers in stock. Refer to Section 4 for information on Drive Isolation transformers.

© Hammond Power Solutions Inc.
Data subject to change without notice.

The RM Line Reactor . . .

CORE

The quality and performance of a line reactor is fundamentally dependant on its ability to withstand harmonics and transients in what is clearly a difficult environment. The bonding and clamping techniques of the gapped core also significantly impacts its performance characteristics.

HPS has paid particular attention to these basics to ensure both reliable and consistent performance.

Core materials, manufacturing and assembly processes have been carefully evaluated to produce optimum losses and sound levels necessary for this product.

COILS

Conductors are precision wound for optimum short circuit withstandability and electrical balance are used throughout the RM line. Choice of conductors, winding techniques and cooling ducts are precisely selected to assure the highest continuous, reliable performance.

INSULATION SYSTEM

HPS Line Reactors are designed to meet the most difficult temperature environments. On units up to 160 amps, RM line reactors have a 115°C temperature rise designed for 200°C Insulation Class. This results in a permissible 24 hour maximum ambient of 50°C and an average of 40°C continuously.

On units larger than 160 amps, Class 220 Insulation is used throughout with a maximum permissible continuous ambient temperature of 60°C. These temperature tests are all measured at 150% rated 60 Hz current. The extra 50% current during the temperature test is to consider the worst heating effect due to the present of harmonics in the motor drive system. Generally harmonic heating effect is approximately 30% and depends on individual drive system. For further information on temperature rises, please consult our sales offices.

VPI IMPREGNATION

Every reactor is fully VPI vacuum and pressure processed with VT (vinyl-toluene) Polyester Resin. This modern, vinyl-toluene based resin with its thicker build, offers significant benefits for electrical, mechanical and thermal properties.

This impregnation process and material results in a much improved dielectric constant, dissipation factor, bonding strength and dielectric breakdown (volts per mil) than any other impregnation material including the more traditional oil modified epoxies and varnishes.

Vacuum impregnation is considered vital for the integrity of electrical equipment located in such sensitive locations. The core and coil assembly is finished with a clear resin.

TERMINATIONS

Custom connections are provided for in several ways. Finger-proof-terminal blocks are provided on three model ranges, and terminal pads are supplied on higher current ratings. Refer to the dimensional summary for details. All connections are brazed to ensure electrical integrity.

© Hammond Power Solutions Inc.
Data subject to change without notice.

. . . Features of Construction

ENCLOSURES

Enclosed reactors are standard as either NEMA 2 or 3R. Units in NEMA 3R enclosures are suitable for floor or wall mounting. Wall mounting is available on NEMA 3R units up to 600 lbs. Please consult customer service for details.

Enclosures are finished with a 7 stage phosphate process with baked enamel ANSI 61 grey.

QUALITY CONTROL

Every reactor is production line tested in accordance with the requirements for UL, ANSI, NEMA and CSA. This confirms that every unit meets our highest expectations for Quality Assurance.

Additionally, line reactors have been short circuit tested at a certified laboratory to confirm the withstandability of our reactors to short circuits that may be present in a distribution system. Tests were done in accordance with ANSI C57.12.91 at 25 times rated current for 2 seconds. Those test results are available upon request successfully withstanding this test ensured that the RM line reactor will survive power stresses such as short circuits that may be present in a distribution circuit.

UL and CSA CERTIFICATION

A vital assurance for our customers is the approval of this product line to national standards.

Our open and enclosed style reactors are recognized by UL and certified by CSA as follows:

UL File No.: E61431

CSA File No.: LR3902

This approval is inclusive to 2000 amps and 8.6 kV class, and may be of interest for any special applications.

Our products are built in accordance with and meet UL 508, UL 506 and CSA C22.2 NO.66 standards.

INPUT AND OUTPUT SIDE REACTORS

HPS three phase Line Reactors are designed for both the input and output side of variable speed drives including Insulated Gate Bipolar Transistor (IGBT) type inverters.

SPECIALS

For special applications or for any features that you may require beyond the standard line listed, please contact our sales offices.

© Hammond Power Solutions Inc.

Data subject to change without notice.

Standard Three Phase Line Reactor Specifications

RATINGS:

Nominal Inductance +/- 10% @ rated current.
95% of nominal inductance @ 150% rated current.
50% of nominal inductance @ 350% of rated current.

The above performance indicates that even at very substantial overload conditions (even beyond what other equipment in the circuit could tolerate), the RM Line Reactor will still provide current limiting performance against total harmonic distortion generated by the drive system.

TEMPERATURE RISE:

115° C on units up to 160 amps; average ambient of 40°C.
115° C on units larger than 160 amps; average ambient of 60° C.

INSULATION SYSTEM:

200°C Temperature Class up to 160 amps.
220°C Temperature Class over 160 amps.

FREQUENCY:

60 Hz Fundamental Current Maximum.

COOLING METHOD:

Natural convection

SYSTEM VOLTAGE:

600V Class

APPROVALS:

UL File No.: E61431
CSA File No.: LR 3902
CE Mark (IEC 61558-2-20:2000)

SOUND LEVEL:

2 to 18 amps: 58 dBA
130 to 320 amps: 70 dBA
25 to 100 amps: 64 dBA
400 to 1200 amps: 75 dBA

ENCLOSURE: (when specified)

NEMA 2 or NEMA 3R, ANSI 61 Grey, UL50

HARMONIC WITHSTAND:

HPS reactors are designed to withstand typical harmonics associated with both the input and output side of AC variable speed drives including IGBT type inverter drives. For additional information, contact our sales office.

© Hammond Power Solutions Inc.
Data subject to change without notice.

RM Series Line Reactor Selection Tables

Line Reactor Part Number Guide

RM 0002 M 32 _* __

- Further suffix to follow.
- **Add suffix "E" for Enclosure.**
- Inductance Value
- The inductance value is preceded with a letter to designate the position of the decimal point to determine the inductance. The letters are as follows:
  - 'M' XX. mH
  - 'N' X.X mH
  - 'P' 0.XX mH
  - 'U' .0XX mH or XX.0 uH
  - Example: M32 is 32.0 mH
- 4 digits for current rating
- In-Line Reactor

Note: As all characters of the P/N represent performance values of the reactor, P/N's are not completely sequential. They are sorted by current rating.

* **Add the Suffix "E" to the standard part number for an Enclosed unit.**

HP Rating	240 Volt - 60 Hz			
	3% Impedance		5% Impedance	
	P/N	Amps	P/N	Amps
0.5	RM0004N65	4	RM0004M12	4
1	RM0004N30	4	RM0004N65	4
1.5	RM0008N30	8	RM0008N50	8
2	RM0008N15	8	RM0008N30	8
3	RM0012N13	12	RM0012N25	12
5	RM0018P80	18	RM0018N15	18
7.5	RM0025P50	25	RM0025N12	25
10	RM0035P40	35	RM0035P80	35
15	RM0045P30	45	RM0055P50	55
20	RM0055P25	55	RM0055P50	55
25	RM0080P20	80	RM0080P40	80
30	RM0080P20	80	RM0080P23	80
40	RM0130P10	130	RM0110P18	110
50	RM0130P10	130	RM0130P20	130
60	RM0160U75	160	RM0160P15	160
75	RM0200U55	200	RM0200P11	200
100	RM0250U45	250	RM0250U90	250
125	RM0320U40	320	RM0320U75	320
150	RM0400U30	400	RM0400U61	400
200	RM0500U25	500	RM0500U50	500
250	RM0600U20	600	RM0600U40	600
300	RM0750U15	750	RM0750U25	750
350	RM0900U13	900	RM0900U26	900
400	RM1000U11	1000	RM1000U18	1000
500	RM1200U10	1200	RM1200U15	1200

HP Rating	480 Volt - 60 Hz			
	3% Impedance		5% Impedance	
	P/N	Amps	P/N	Amps
1	RM0002M12	2	RM0002M20	2
1.5	RM0004N91	4	RM0004M12	4
2	RM0004N65	4	RM0004M12	4
3	RM0008N50	8	RM0008N75	8
5	RM0008N30	8	RM0008N50	8
7.5	RM0012N25	12	RM0012N42	12
10	RM0018N15	18	RM0018N25	18
15	RM0025N12	25	RM0025N20	25
20	RM0035P80	35	RM0035N17	35
25	RM0035P80	35	RM0035N12	35
30	RM0045P70	45	RM0045N12	45
40	RM0055P50	55	RM0055P85	55
50	RM0080P40	80	RM0080P70	80
60	RM0080P40	80	RM0080P70	80
75	RM0110P30	110	RM0110P45	110
100	RM0130P20	130	RM0130P30	130
125	RM0160P15	160	RM0160P23	160
150	RM0200P11	200	RM0200P24	200
200	RM0250U90	250	RM0250P15	250
250	RM0320U75	320	RM0320P13	320
300	RM0400U61	400	RM0400P11	400
350	RM0500U50	500	RM0500U85	500
400	RM0500U50	500	RM0500U85	500
500	RM0600U40	600	RM0600U65	600
600	RM0750U36	750	RM0750U60	750
700	RM0900U26	900	RM0900U43	900
800	RM1000U29	1000	RM1000U38	1000
1000	RM1200U18	1200	RM1200U30	1200

HP Rating	600 Volt - 60 Hz			
	3% Impedance		5% Impedance	
	P/N	Amps	P/N	Amps
1	RM0002M20	2	RM0002M32	2
1.5	RM0002M12	2	RM0002M20	2
2	RM0004M12	4	RM0004M22	4
3	RM0004N91	4	RM0004M12	4
5	RM0008N50	8	RM0008N75	8
7.5	RM0012N31	12	RM0012N51	12
10	RM0012N25	12	RM0012N42	12
15	RM0018N15	18	RM0018N25	18
20	RM0025N12	25	RM0025N20	25
25	RM0035N12	35	RM0035N17	35
30	RM0035P80	35	RM0035N17	35
40	RM0045P70	45	RM0045N12	45
50	RM0055P50	55	RM0055P85	55
60	RM0080P40	80	RM0080P70	80
75	RM0080P40	80	RM0080P70	80
100	RM0110P30	110	RM0110P45	110
125	RM0130P20	130	RM0130P37	130
150	RM0160P23	160	RM0160P32	160
200	RM0200P19	200	RM0200P24	200
250	RM0250P15	250	RM0250P19	250
300	RM0320U96	320	RM0320P16	320
350	RM0400U82	400	RM0400P14	400
400	RM0400U82	400	RM0400P14	400
500	RM0500U57	500	RM0500U96	500
600	RM0600U65	600	RM0600U80	600
700	RM0700U41	700	RM0700U68	700
800	RM0750U36	750	RM0750U60	750
900	RM0900U32	900	RM0900U53	900
1000	RM1000U29	1000	RM1000U48	1000
1200	RM1200U24	1200	RM1200U40	1200

© Hammond Power Solutions Inc.

Data subject to change without notice.

HP Rating	525 Volt - 50 Hz			
	3% Impedance		5% Impedance	
	P/N	Amps	P/N	Amps
1	RM0002M20	2	RM0002M32	2
1.5	RM0002M12	2	RM0002M20	2
2	RM0004M12	4	RM0004M22	4
3	RM0004N65	4	RM0004M12	4
5	RM0008N50	8	RM0008N75	8
7.5	RM0012N31	12	RM0012N51	12
10	RM0012N25	12	RM0012N42	12
15	RM0018N15	18	RM0018N25	18
20	RM0025N12	25	RM0025N20	25
25	RM0035N12	35	RM0035N17	35
30	RM0035P80	35	RM0035N17	35
40	RM0045P70	45	RM0045N12	45
50	RM0055P50	55	RM0055P85	55
60	RM0080P40	80	RM0080P70	80
75	RM0080P40	80	RM0080P70	80
100	RM0110P30	110	RM0110P45	110
125	RM0130P20	130	RM0130P37	130
150	RM0160P23	160	RM0160P32	160
200	RM0200P19	200	RM0200P24	200
250	RM0250P15	250	RM0250P19	250
300	RM0320U96	320	RM0320P16	320
350	RM0400U82	400	RM0400P14	400
400	RM0400U82	400	RM0400P14	400
500	RM0500U57	500	RM0500U96	500
600	RM0600U65	600	RM0600U80	600
700	RM0700U41	700	RM0700U68	700
800	RM0750U36	750	RM0750U60	750
900	RM0900U32	900	RM0900U53	900
1000	RM1000U29	1000	RM1000U48	1000
1200	RM1200U24	1200	RM1200U40	1200

HP Rating	660 Volt - 50 Hz			
	3% Impedance		5% Impedance	
	P/N	Amps	P/N	Amps
1	RM0002M32	2	Consult Factory	2
1.5	RM0002M20	2	RM0002M32	2
2	RM0004M22	4	Consult Factory	4
3	RM0004M12	4	RM0004M22	4
5	RM0008N75	8	Consult Factory	8
7.5	RM0008N50	8	RM0008N75	8
10	RM0012N42	12	Consult Factory	12
15	RM0018N25	18	Consult Factory	18
20	RM0025N20	25	Consult Factory	25
25	RM0025N20	25	Consult Factory	25
30	RM0035N17	35	Consult Factory	35
40	RM0035N12	35	RM0035N17	35
50	RM0055P85	55	Consult Factory	55
60	RM0055P85	55	Consult Factory	55
75	RM0080P70	80	Consult Factory	80
100	RM0080P40	80	RM0080P70	80
125	RM0110P45	110	Consult Factory	110
150	RM0130P30	130	Consult Factory	130
200	RM0160P23	160	Consult Factory	160
250	RM0200P19	200	Consult Factory	200
300	RM0250P15	250	Consult Factory	250
350	RM0320P13	320	Consult Factory	320
400	RM0320P13	320	Consult Factory	320
500	RM0400U82	400	RM0400P14	400
600	RM0500U85	500	Consult Factory	500
700	RM0600U65	600	Consult Factory	600
800	RM0700U68	700	Consult Factory	700
900	RM0750U60	750	Consult Factory	750
1000	RM0900U43	900	Consult Factory	900
1200	RM1000U38	1000	Consult Factory	1000

HP Rating	690 Volt - 50 Hz			
	3% Impedance		5% Impedance	
	P/N	Amps	P/N	Amps
1	RM0002M32	2	Consult Factory	2
1.5	RM0002M20	2	Consult Factory	2
2	RM0002M20	2	RM0002M32	2
3	RM0004M12	4	RM0004M22	4
5	RM0008N75	8	Consult Factory	8
7.5	RM0008N50	8	Consult Factory	8
10	RM0012N42	12	Consult Factory	12
15	RM0018N25	18	Consult Factory	18
20	RM0018N25	18	Consult Factory	18
25	RM0025N20	25	Consult Factory	25
30	RM0035N17	35	Consult Factory	35
40	RM0035N12	35	Consult Factory	35
50	RM0045N12	45	Consult Factory	45
60	RM0055P85	55	Consult Factory	55
75	RM0080P70	80	Consult Factory	80
100	RM0080P40	80	Consult Factory	80
125	RM0110P45	110	Consult Factory	110
150	RM0130P30	130	Consult Factory	130
200	RM0160P23	160	Consult Factory	160
250	RM0200P19	200	Consult Factory	200
300	RM0250P19	250	Consult Factory	250
350	RM0320P16	320	Consult Factory	320
400	RM0320P13	320	Consult Factory	320
500	RM0400P11	400	Consult Factory	400
600	RM0500U85	500	Consult Factory	500
700	RM0600U65	600	Consult Factory	600
800	RM0600U65	600	Consult Factory	600
900	RM0700U68	700	Consult Factory	700
1000	RM0750U60	750	Consult Factory	750
1200	RM0900U43	900	Consult Factory	900

© Hammond Power Solutions Inc.
Data subject to change without notice.

Standard Three Phase Line Reactor Core & Coil Specification Charts

Current (Amps)	Part Number	Inductance (mH)	Watts Loss	Dimensions					Mtg Slot/ Hole Size	Dim. Fig. # (Page 117)	Weight (Lbs.)
				W	D	H	Mtg. W	Mtg. D			
2	**RM0002M12**	12.0	7	4.40	2.83	3.33	1.44/2.56	1.77	.281 x .625	1	2
2	**RM0002M20**	20.0	9	4.40	2.83	3.33	1.44/2.56	1.77	.281 x .625	1	3
2	**RM0002M32**	32.0	13	4.40	2.83	3.33	1.44/2.56	1.77	.281 x .625	1	3
4	**RM0004M12**	12.0	21	4.40	3.33	3.33	1.44/2.56	2.37	.281 x .625	1	4
4	**RM0004M22**	22.0	25	6.00	3.30	4.80	2.00/3.00	2.09	.281 x .625	3	8
4	**RM0004N30**	3.00	7	4.40	2.83	3.33	1.44/2.56	1.77	.281 x .625	1	2
4	**RM0004N65**	6.50	13	4.40	2.83	3.33	1.44/2.56	1.77	.281 x .625	1	3
4	**RM0004N91**	9.10	15	4.40	3.33	3.33	1.44/2.56	2.37	.281 x .625	1	3
8	**RM0008N15**	1.50	11	4.40	2.83	3.33	2.00	1.77	.281 x .625	1	3
8	**RM0008N30**	3.00	25	4.40	2.83	3.33	2.00	1.77	.281 x .625	1	3
8	**RM0008N50**	5.00	31	4.40	3.33	3.33	2.00	2.37	.281 x .625	1	4
8	**RM0008N75**	7.50	31	6.00	3.55	4.80	2.00/3.00	2.34	.281 x .625	3	9
12	**RM0012N13**	1.30	23	4.40	2.83	3.33	2.00	1.77	.281 x .625	1	3
12	**RM0012N25**	2.50	26	6.00	3.30	4.80	2.00/3.00	2.09	.281 x .625	3	8
12	**RM0012N31**	3.10	30	6.00	3.55	4.80	2.00/3.00	2.34	.281 x .625	3	9
12	**RM0012N42**	4.20	34	6.00	3.80	4.80	2.00/3.00	2.59	.281 x .625	3	10
12	**RM0012N51**	5.10	39	6.05	3.80	4.80	2.00/3.00	2.59	.281 x .625	3	13
18	**RM0018N15**	1.50	29	6.00	3.55	4.80	2.00/3.00	2.34	.281 x .625	3	9
18	**RM0018N25**	2.50	40	6.00	3.84	4.80	2.00/3.00	2.84	.281 x .625	2	13
18	**RM0018P80**	0.80	19	6.00	3.30	4.80	2.00/3.00	2.09	.281 x .625	3	7
25	**RM0025N12**	1.20	44	6.10	3.84	5.70	2.00/3.00	2.34	.281 x .625	2	10
25	**RM0025N20**	2.00	59	7.15	3.75	5.60	3.00	2.87	.38 x .63	3	18
25	**RM0025P50**	0.50	23	6.00	3.84	5.70	2.00/3.00	2.09	.281 x .625	2	7
35	**RM0035N12**	1.20	75	8.50	4.37	6.88	3.00/4.20	3.12	.44 X 1.00	3	26
35	**RM0035N17**	1.70	90	8.60	4.87	6.93	3.00/4.20	3.62	.44 X 1.00	3	35
35	**RM0035P40**	0.40	36	6.00	3.34	5.70	2.00/3.00	2.34	.281 x .625	2	9
35	**RM0035P80**	0.80	51	7.00	3.75	5.61	3.00	2.87	.38 x .63	3	17
45	**RM0045N12**	1.20	100	8.50	4.37	6.88	3.00/4.20	3.62	.44 X 1.00	3	35
45	**RM0045P30**	0.30	33	6.00	3.84	5.70	2.00/3.00	2.84	.281 x .625	2	13
45	**RM0045P70**	0.70	64	6.90	4.45	5.60	3.00	3.37	.38 x .63	3	22
55	**RM0055P25**	0.25	39	6.05	3.84	5.70	2.00/3.00	2.84	.281 x .625	2	12
55	**RM0055P50**	0.50	75	8.50	4.37	6.88	3.00/4.20	3.12	.44 X 1.00	3	26
55	**RM0055P85**	0.85	110	8.50	4.87	6.95	3.00/4.20	3.62	.44 X 1.00	3	35
80	**RM0080P20**	0.20	88	8.50	4.37	6.88	3.00/4.20	3.12	.44 X 1.00	4	26
80	**RM0080P23**	0.23	70	8.50	4.87	6.88	3.00/4.20	3.62	.44 X 1.00	4	33
80	**RM0080P40**	0.40	138	9.40	5.94	6.95	3.00/4.20	3.62	.44 X 1.00	4	36
80	**RM0080P70**	0.70	140	10.50	5.85	8.35	3.60/4.80	4.23	.44 X 1.25	4	63
110	**RM0110P15**	0.15	86	8.50	5.44	6.88	3.00/4.20	3.12	.44 X 1.00	4	27
110	**RM0110P18**	0.18	95	8.50	4.87	6.88	3.00/4.20	3.62	.44 X 1.00	4	35
110	**RM0110P30**	0.30	123	10.70	5.85	8.35	3.60/4.80	4.23	.44 X 1.25	4	52
110	**RM0110P45**	0.45	130	10.50	5.85	8.29	3.60/4.80	4.23	.44 X 1.25	4	63
130	**RM0130P10**	0.10	95	8.50	5.44	6.88	3.00/4.20	3.12	.44 X 1.00	4	27
130	**RM0130P20**	0.20	115	10.70	6.20	8.35	3.60/4.80	3.73	.44 X 1.25	4	41
130	**RM0130P30**	0.30	142	10.70	5.85	8.29	3.60/4.80	4.23	.44 X 1.25	4	53
130	**RM0130P37**	0.37	143	10.70	6.35	8.32	3.60/4.80	4.73	.44 X 1.25	4	75
160	**RM0160P15**	0.15	129	10.50	6.20	8.31	3.60/4.80	3.73	.44 X 1.25	4	46
160	**RM0160P23**	0.23	142	10.90	6.35	8.29	3.60/4.80	4.73	.44 X 1.25	4	66
160	**RM0160P32**	0.32	141	10.50	8.35	8.29	3.60/4.80	6.73	.44 X 1.25	4	104
160	**RM0160U75**	0.08	100	8.50	5.44	6.91	3.00/4.20	3.12	.44 X 1.00	4	29

All dimensions in inches

© Hammond Power Solutions Inc.

Data subject to change without notice.

Standard Three Phase Line Reactor Core & Coil Specification Charts

Current (Amps)	Part Number	Inductance (mH)	Watts Loss	Dimensions					Mtg Slot/ Hole Size	Dim. Fig. # (Page 117)	Weight (Lbs.)
				W	D	H	Mtg. W	Mtg. D			
200	**RM0200P11**	0.11	114	10.50	7.53	8.35	3.60/4.80	4.48	.44 X 1.25	4	52
200	**RM0200P19**	0.190	138	10.50	9.53	8.29	3.60/4.80	6.23	.44 X 1.25	4	93
200	**RM0200P24**	0.240	164	10.50	8.35	8.29	3.60/4.80	6.73	.44 X 1.25	4	105
200	**RM0200U55**	0.055	89	8.50	5.94	7.05	3.00/4.20	3.62	.44 X 1.00	4	37
250	**RM0250P15**	0.150	188	13.75	9.00	11.43	4.80	5.44	.44 X 1.00	5	119
250	**RM0250P19**	0.190	203	13.75	7.25	11.43	4.80	5.94	.44 X 1.00	5	137
250	**RM0250U45**	0.045	90	10.50	5.35	8.31	3.60/4.80	3.73	.44 X 1.25	4	40
250	**RM0250U90**	0.090	131	10.50	8.75	8.35	3.60/4.80	4.73	.44 X 1.25	4	65
320	**RM0320P13**	0.13	245	13.75	7.75	11.43	4.80	6.44	.44 X 1.00	5	127
320	**RM0320P16**	0.160	270	13.75	8.25	11.43	4.80	6.44	.44 X 1.00	5	146
320	**RM0320U40**	0.040	94	10.50	6.85	8.29	3.60/4.80	5.23	.44 X 1.25	4	69
320	**RM0320U75**	0.075	184	13.75	8.44	11.43	4.80	5.94	.44 X 1.00	5	87
320	**RM0320U96**	0.096	214	13.75	6.25	11.43	4.80	4.93	.44 X 1.00	5	107
400	**RM0400P11**	0.11	278	13.75	7.75	11.43	4.80	6.44	.44 X 1.00	5	156
400	**RM0400P14**	0.14	305	18.00	11.00	14.00	6.00	8.25	0.563	6	253
400	**RM0400U30**	0.030	130	10.50	6.35	8.29	3.60/4.80	4.73	.44 X 1.25	4	61
400	**RM0400U61**	0.061	177	13.75	8.69	11.43	4.80	5.44	.44 X 1.00	5	115
400	**RM0400U82**	0.082	210	13.75	7.75	11.43	4.80	6.44	.44 X 1.00	5	148
500	**RM0500U25**	0.025	152	13.75	7.75	11.43	4.80	6.44	.44 X 1.00	5	100
500	**RM0500U50**	0.05	196	13.75	9.69	11.43	4.80	6.44	.44 X 1.00	5	151
500	**RM0500U57**	0.057	217	13.75	9.63	11.43	4.80	6.94	.44 X 1.00	5	168
500	**RM0500U85**	0.085	280	13.75	9.75	11.43	4.80	8.44	.44 X 1.00	5	225
500	**RM0500U96**	0.096	317	22.00	10.75	20.50	6.00	8.75	0.75	6	282
600	**RM0600U20**	0.020	147	13.75	8.25	11.43	4.80	6.56	.44 X 1.00	5	115
600	**RM0600U40**	0.040	223	13.75	8.25	11.43	4.80	6.94	.44 X 1.00	5	177
600	**RM0600U65**	0.065	290	13.75	9.75	11.43	4.80	8.44	.44 X 1.00	5	230
600	**RM0600U80**	0.080	340	22.50	12.63	20.50	7.50	8.75	0.75	6	310
700	**RM0700U41**	0.041	276	22.50	13.00	20.25	6.00	8.25	0.56	6	240
700	**RM0700U68**	0.068	400	22.50	14.25	22.00	7.50	9.75	0.75	6	403
750	**RM0750U15**	0.015	209	18.00	8.25	14.00	6.00	6.25	0.563	6	159
750	**RM0750U25**	0.025	250	18.00	9.25	14.00	6.00	7.25	0.563	6	184
750	**RM0750U36**	0.036	293	18.00	9.75	14.00	6.00	7.75	0.563	6	236
750	**RM0750U60**	0.060	415	22.50	13.50	20.75	7.50	8.25	0.75	6	403
900	**RM0900U13**	0.013	216	18.00	12.00	14.00	6.00	7.25	0.56	6	159
900	**RM0900U26**	0.026	286	18.00	13.00	14.00	6.00	8.25	0.56	6	259
900	**RM0900U32**	0.032	400	18.00	13.63	14.00	6.00	10.25	0.75	6	340
900	**RM0900U43**	0.043	441	22.50	14.00	20.50	7.50	8.75	0.75	6	434
900	**RM0900U53**	0.053	490	22.50	13.00	21.50	7.50	10.25	0.75	6	546
1000	**RM1000U11**	0.011	179	18.00	12.50	18.00	6.00	9.25	0.75	6	200
1000	**RM1000U18**	0.018	232	22.50	13.75	20.50	7.50	11	0.75	6	282
1000	**RM1000U29**	0.029	377	22.50	13.75	20.50	7.50	7.25	0.75	6	394
1000	**RM1000U38**	0.038	416	22.50	14.00	20.50	7.50	10.25	0.56	6	450
1000	**RM1000U48**	0.048	490	22.50	15.00	20.50	7.50	11.25	0.75	6	642
1200	**RM1200U10**	0.010	228	18.00	13.50	14.00	6.00	8.25	0.563	6	205
1200	**RM1200U15**	0.015	287	18.00	14.00	18.50	6.00	10.75	0.75	6	300
1200	**RM1200U18**	0.018	395	18.00	14.25	18.38	7.50	8.25	0.75	6	343
1200	**RM1200U24**	0.024	440	22.50	14.00	20.50	7.50	9.25	0.75	6	444
1200	**RM1200U30**	0.030	490	22.50	14.00	17.00	7.50	10.25	0.75	6	534
1200	**RM1200U40**	0.040	576	22.50	17.00	19.50	7.50	11.75	0.563	6	600

All dimensions in inches

© Hammond Power Solutions Inc.

Data subject to change without notice.

Standard Three Phase Line Reactor Enclosed Specification Charts

Current (Amps)	Part Number	Inductance (mH)	Watts Loss	Dimensions					Mtg Slot/ Hole Size	Dim. Fig. # (Page 117)	Case Style	Enclosed Weight (Lbs.)
				W	D	H	Mtg. W	Mtg. D				
2	**RM0002M12E**	12.0	7	10.00	8.00	8.00	7.00	6.50	0.188	1	N1	9
2	**RM0002M20E**	20.0	9	10.00	8.00	8.00	7.00	6.50	0.188	1	N1	10
2	**RM0002M32E**	32.0	13	10.00	8.00	8.00	7.00	6.50	0.188	1	N1	10
4	**RM0004M12E**	12.0	21	10.00	8.00	8.00	7.00	6.50	0.188	1	N1	11
4	**RM0004M22E**	22.0	25	10.00	8.00	8.00	7.00	6.50	0.188	3	N1	15
4	**RM0004N30E**	3.00	7	10.00	8.00	8.00	7.00	6.50	0.188	1	N1	9
4	**RM0004N65E**	6.50	13	10.00	8.00	8.00	7.00	6.50	0.188	1	N1	10
4	**RM0004N91E**	9.10	15	10.00	8.00	8.00	7.00	6.50	0.188	1	N1	10
8	**RM0008N15E**	1.50	11	10.00	8.00	8.00	7.00	6.50	0.188	1	N1	10
8	**RM0008N30E**	3.00	25	10.00	8.00	8.00	7.00	6.50	0.188	1	N1	10
8	**RM0008N50E**	5.00	31	10.00	8.00	8.00	7.00	6.50	0.188	1	N1	11
8	**RM0008N75E**	7.50	31	10.00	8.00	8.00	7.00	6.50	0.188	3	N1	16
12	**RM0012N13E**	1.30	23	10.00	8.00	8.00	7.00	6.50	0.188	1	N1	10
12	**RM0012N25E**	2.50	26	10.00	8.00	8.00	7.00	6.50	0.188	3	N1	15
12	**RM0012N31E**	3.10	30	10.00	8.00	8.00	7.00	6.50	0.188	3	N1	16
12	**RM0012N42E**	4.20	34	10.00	8.00	8.00	7.00	6.50	0.188	3	N1	17
12	**RM0012N51E**	5.10	39	10.00	8.00	8.00	7.00	6.50	0.188	3	N1	20
18	**RM0018N15E**	1.50	29	10.00	8.00	8.00	7.00	6.50	0.188	3	N1	16
18	**RM0018N25E**	2.50	40	10.00	8.00	8.00	7.00	6.50	0.188	2	N1	20
18	**RM0018P80E**	0.80	19	10.00	8.00	8.00	7.00	6.50	0.188	3	N1	14
25	**RM0025N12E**	1.20	44	10.00	8.00	8.00	7.00	6.50	0.188	2	N1	17
25	**RM0025N20E**	2.00	59	14.00	14.00	12.00	10.00	10.50	0.188	3	N2	35
25	**RM0025P50E**	0.50	23	10.00	8.00	8.00	7.00	6.50	0.188	2	N1	14
35	**RM0035N12E**	1.20	75	14.00	14.00	12.00	10.00	10.50	0.188	3	N2	43
35	**RM0035N17E**	1.70	90	14.00	14.00	12.00	10.00	10.50	0.188	3	N2	52
35	**RM0035P40E**	0.40	36	10.00	8.00	8.00	7.00	6.50	0.188	2	N1	16
35	**RM0035P80E**	0.80	51	14.00	14.00	12.00	10.00	10.50	0.188	3	N2	24
45	**RM0045N12E**	1.20	100	14.00	14.00	12.00	10.00	10.50	0.188	3	N2	52
45	**RM0045P30E**	0.30	33	10.00	8.00	8.00	7.00	6.50	0.188	2	N1	20
45	**RM0045P70E**	0.70	64	14.00	14.00	12.00	10.00	10.50	0.188	3	N2	39
55	**RM0055P25E**	0.25	39	10.00	8.00	8.00	7.00	6.50	0.188	2	N1	19
55	**RM0055P50E**	0.50	75	14.00	14.00	12.00	10.00	10.50	0.188	3	N2	43
55	**RM0055P85E**	0.85	110	14.00	14.00	12.00	10.00	10.50	0.188	3	N2	52
80	**RM0080P20E**	0.20	88	14.00	14.00	12.00	10.00	10.50	0.188	4	N2	43
80	**RM0080P23E**	0.23	70	14.00	14.00	12.00	10.00	10.50	0.188	4	N2	50
80	**RM0080P40E**	0.40	138	14.00	14.00	12.00	10.00	10.50	0.188	4	N2	53
80	**RM0080P70E**	0.70	140	14.00	14.00	12.00	10.00	10.50	0.188	4	N2	80
110	**RM0110P15E**	0.15	86	14.00	14.00	12.00	10.00	10.50	0.188	4	N2	44
110	**RM0110P18E**	0.18	95	14.00	14.00	12.00	10.00	10.50	0.188	4	N2	52
110	**RM0110P30E**	0.30	123	14.00	14.00	12.00	10.00	10.50	0.188	4	N2	69
110	**RM0110P45E**	0.45	130	14.00	14.00	12.00	10.00	10.50	0.188	4	N2	80
130	**RM0130P10E**	0.10	95	14.00	14.00	12.00	10.00	10.50	0.188	4	N2	44
130	**RM0130P20E**	0.20	115	14.00	14.00	12.00	10.00	10.50	0.188	4	N2	58
130	**RM0130P30E**	0.30	142	14.00	14.00	12.00	10.00	10.50	0.188	4	N2	70
130	**RM0130P37E**	0.37	143	14.00	14.00	12.00	10.00	10.50	0.188	4	N2	92
160	**RM0160P15E**	0.15	129	14.00	14.00	12.00	10.00	10.50	0.188	4	N2	63
160	**RM0160P23E**	0.23	142	14.00	14.00	12.00	10.00	10.50	0.188	4	N2	83
160	**RM0160P32E**	0.32	141	23.90	25.00	28.75	22.75	9.00	0.56	4	NH6	164
160	**RM0160U75E**	0.08	100	14.00	14.00	12.00	10.00	10.50	0.188	4	N2	46

Note: **Please refer to Pages 260 to 264 for enclosure dimensional specifications**

All dimensions in inches

© Hammond Power Solutions Inc.

Data subject to change without notice.

Standard Three Phase Line Reactor Enclosed Specification Charts

Current (Amps)	Part Number	Inductance (mH)	Watts Loss	Dimensions					Mtg Slot/ Hole Size	Dim. Fig. # (Page 117)	Case Style	Enclosed Weight (Lbs.)
				W	D	H	Mtg. W	Mtg. D				
200	**RM0200P11E**	0.11	114	23.90	25.00	28.75	22.75	9.00	0.56	4	NH6	112
200	**RM0200P19E**	0.190	138	23.90	25.00	28.75	22.75	9.00	0.56	4	NH6	153
200	**RM0200P24E**	0.240	164	19.40	20.20	21.50	18.00	9.00	0.56	4	NH5	165
200	**RM0200U55E**	0.055	89	14.00	14.00	12.00	10.00	10.50	0.188	4	N2	154
250	**RM0250P15E**	0.150	188	23.90	25.00	28.75	22.75	9.00	0.56	5	NH6	179
250	**RM0250P19E**	0.190	203	23.90	25.00	28.75	22.75	9.00	0.56	5	NH6	197
250	**RM0250U45E**	0.045	90	23.90	25.00	28.75	22.75	9.00	0.56	4	NH6	100
250	**RM0250U90E**	0.090	131	23.90	25.00	28.75	22.75	9.00	0.56	4	NH6	125
320	**RM0320P13E**	0.13	245	23.90	25.00	28.75	22.75	9.00	0.56	5	NH6	187
320	**RM0320P16E**	0.160	270	23.90	25.00	28.75	22.75	9.00	0.56	5	NH6	206
320	**RM0320U40E**	0.040	94	23.90	25.00	28.75	22.75	9.00	0.56	4	NH6	129
320	**RM0320U75E**	0.075	184	23.90	25.00	28.75	22.75	9.00	0.56	5	NH6	147
320	**RM0320U96E**	0.096	214	23.90	25.00	28.75	22.75	9.00	0.56	5	NH6	167
400	**RM0400P11E**	0.11	278	23.90	25.00	28.75	22.75	9.00	0.56	5	NH6	216
400	**RM0400P14E**	0.14	305	23.90	25.00	28.75	22.75	9.00	0.56	6	NH6	313
400	**RM0400U30E**	0.030	130	23.90	25.00	28.75	22.75	9.00	0.56	4	NH6	121
400	**RM0400U61E**	0.061	177	23.90	25.00	28.75	22.75	9.00	0.56	5	NH6	175
400	**RM0400U82E**	0.082	210	23.90	25.00	28.75	22.75	9.00	0.56	5	NH6	208
500	**RM0500U25E**	0.025	152	23.90	25.00	28.75	22.75	9.00	0.56	5	NH6	160
500	**RM0500U50E**	0.05	196	23.90	25.00	28.75	22.75	9.00	0.56	5	NH6	211
500	**RM0500U57E**	0.057	217	26.00	25.00	38.00	21.50	19.00	0.56	5	NH3	245
500	**RM0500U85E**	0.085	280	26.00	25.00	38.00	21.50	19.00	0.56	5	NH3	302
500	**RM0500U96E**	0.096	317	26.00	25.00	38.00	21.50	19.00	0.56	6	NH3	359
600	**RM0600U20E**	0.020	147	26.00	25.00	38.00	21.50	19.00	0.56	5	NH3	192
600	**RM0600U40E**	0.040	223	26.00	25.00	38.00	21.50	19.00	0.56	5	NH3	254
600	**RM0600U65E**	0.065	290	26.00	25.00	38.00	21.50	19.00	0.56	5	NH3	307
600	**RM0600U80E**	0.080	340	32.00	29.50	41.00	23.50	23.50	0.56	6	NH4	417
700	**RM0700U41E**	0.041	276	32.00	29.50	41.00	23.50	23.50	0.56	6	NH4	347
700	**RM0700U68E**	0.068	400	32.00	29.50	41.00	23.50	23.50	0.56	6	NH4	510
750	**RM0750U15E**	0.015	209	32.00	29.50	41.00	23.50	23.50	0.56	6	NH4	266
750	**RM0750U25E**	0.025	250	32.00	29.50	41.00	23.50	23.50	0.56	6	NH4	291
750	**RM0750U36E**	0.036	293	32.00	29.50	41.00	23.50	23.50	0.56	6	NH4	343
750	**RM0750U60E**	0.060	415	32.00	29.50	41.00	23.50	23.50	0.56	6	NH4	510
900	**RM0900U13E**	0.013	216	32.00	29.50	41.00	23.50	23.50	0.56	6	NH4	266
900	**RM0900U26E**	0.026	286	32.00	29.50	41.00	23.50	23.50	0.56	6	NH4	366
900	**RM0900U32E**	0.032	400	32.00	29.50	41.00	23.50	23.50	0.56	6	NH4	447
900	**RM0900U43E**	0.043	441	32.00	29.50	41.00	23.50	23.50	0.56	6	NH4	541
900	**RM0900U53E**	0.053	490	32.00	29.50	41.00	23.50	23.50	0.56	6	NH4	653
1000	**RM1000U11E**	0.011	179	32.00	29.50	41.00	23.50	23.50	0.56	6	NH4	277
1000	**RM1000U18E**	0.018	232	32.00	29.50	41.00	23.50	23.50	0.56	6	NH4	432
1000	**RM1000U29E**	0.029	377	39.50	34.00	51.50	24.00	32.00	0.69	6	NJ1	544
1000	**RM1000U38E**	0.038	416	26.00	25.00	38.00	21.50	19.00	0.56	6	NH3	684
1000	**RM1000U48E**	0.048	490	39.50	34.00	51.50	24.00	32.00	0.69	6	NJ1	792
1200	**RM1200U10E**	0.010	228	39.50	34.00	51.50	24.00	32.00	0.69	6	NJ1	355
1200	**RM1200U15E**	0.015	287	39.50	34.00	51.50	24.00	32.00	0.69	6	NJ1	432
1200	**RM1200U18E**	0.018	395	39.50	34.00	51.50	24.00	32.00	0.69	6	NJ1	493
1200	**RM1200U24E**	0.024	440	39.50	34.00	51.50	24.00	32.00	0.69	6	NJ1	594
1200	**RM1200U30E**	0.030	490	39.50	34.00	51.50	24.00	32.00	0.69	6	NJ1	684
1200	**RM1200U40E**	0.040	576	39.50	34.00	51.50	24.00	32.00	0.69	6	NJ1	850

Note: **Please refer to Pages 260 to 264 for enclosure dimensional specifications**

All dimensions in inches

© Hammond Power Solutions Inc.

Data subject to change without notice.

Application and Connection Diagrams

INPUT SIDE OF DRIVE

Installed on the input side of drives, reactors will reduce line notching, limit current and voltage spikes and surges from the incoming line and will reduce harmonic distortion from the drive onto the line. Units are installed in front of the drive or inverter as shown.

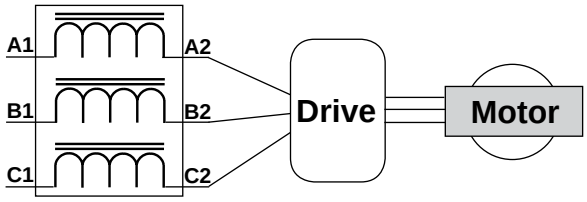

OUTPUT SIDE OF DRIVE

On the output side between the motor and the controller, reactors protect the controller from short circuits at the load. Motor performance improves. Voltage and current waveforms from the supply are enhanced reducing motor overheating and noise emissions.

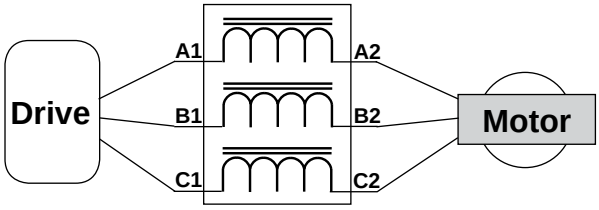

MULTIPLE DRIVES

Individual line reactors are recommended when multiple drives are installed on the same power line. Individual reactors eliminates cross talk between multiple drives and provides isolated protection for each controller for its own specific load.

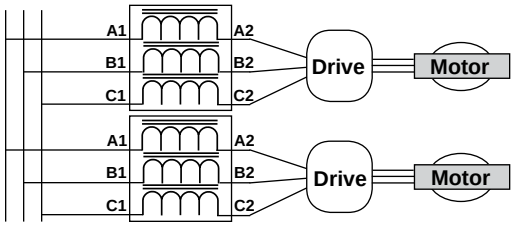

MULTIPLE MOTORS

A single reactor can be installed when the application calls for multiple motors on the same drive. The reactor is sized based on the total horsepower of all the motors. Recommended for simultaneous operating motors only.

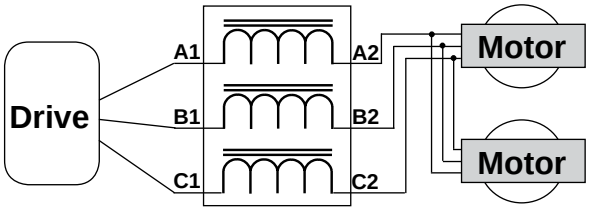

Termination Details

CONNECTOR DETAIL		
Open Style Ref.	**Type**	**Range/Dia.**
Figure #1	Terminal Block	#12 - #22
Figure #2	Terminal Block	#4 - #18
Figure #3	Terminal Block	#4 - #18
<u>All Others:</u>		
80 to 200 amps	Terminal Pad	.313” dia. (diagram 1A)
Above 200 amps	Terminal Pad	.5” dia.(diagram 1B)

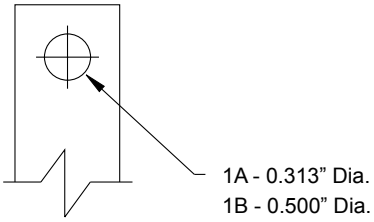

DIAGRAM 1

© Hammond Power Solutions Inc.
Data subject to change without notice.

RM Line Reactor Cross-Reference Table

MTE Part Number	Current (Amps)	HPS Part Number	Induct. (mH)	TCI Part Number
RL-00201	2	**RM0002M12**	12.000	KLR2A
RL-00202	2	**RM0002M20**	20.000	KLR2C
RL-00203	2	**RM0002M32**	32.000	*
RL-00404	4	**RM0004M12**	12.000	*
RL-00401	4	**RM0004N30**	3.000	KLR4B
RL-00402	4	**RM0004N65**	6.500	KLR4A
RL-00403	4	**RM0004N91**	9.100	KLR4C
RL-00801	8	**RM0008N15**	1.500	KLR8B
RL-00802	8	**RM0008N30**	3.000	KLR8A
RL-00803	8	**RM0008N50**	5.000	KLR8C
RL-00804	8	**RM0008N75**	7.500	*
RL-01201	12	**RM0012N13**	1.300	KLR12B
RL-01202	12	**RM0012N25**	2.500	KLR12A
RL-01203	12	**RM0012N42**	4.200	KLR12C
RL-01802	18	**RM0018N15**	1.500	KLR16A
RL-01803	18	**RM0018N25**	2.500	KLR16C
RL-01801	18	**RM0018P80**	0.800	KLR16B
RL-02502	25	**RM0025N12**	1.200	KLR25A
RL-02503	25	**RM0025N20**	2.000	KLR25C
RL-02501	25	**RM0025P50**	0.500	KLR25B
RL-03503	35	**RM0035N12**	1.200	KLR35C
RL-03501	35	**RM0035P40**	0.400	KLR35B
RL-03502	35	**RM0035P80**	0.800	KLR35A
RL-04503	45	**RM0045N12**	1.200	KLR45C
RL-04501	45	**RM0045P30**	0.300	KLR45B
RL-04502	45	**RM0045P70**	0.700	KLR45A
RL-05501	55	**RM0055P25**	0.250	KLR55B
RL-05502	55	**RM0055P50**	0.500	KLR55A
RL-05503	55	**RM0055P85**	0.850	KLR55C

MTE Part Number	Current (Amps)	HPS Part Number	Induct. (mH)	TCI Part Number
RL-08001	80	**RM0080P20**	0.200	KLR80B
RL-08002	80	**RM0080P40**	0.400	KLR80A
RL-08003	80	**RM0080P70**	0.700	KLR80C
RL-10001	100	**RM0110P15**	0.150	KLR110B
RL-10002	100	**RM0110P30**	0.300	KLR110A
RL-10003	100	**RM0110P45**	0.450	KLR110C
RL-13001	130	**RM0130P10**	0.100	KLR130B
RL-13002	130	**RM0130P20**	0.200	KLR130A
RL-13003	130	**RM0130P30**	0.300	KLR130C
RL-16002	160	**RM0160P15**	0.150	KLR160A
RL-16003	160	**RM0160P23**	0.230	KLR160C
RL-16001	160	**RM0160U75**	0.075	KLR160B
RL-20002	200	**RM0200P11**	0.110	KLR200A
RL-20003	200	**RM0200P19**	0.190	KLR200C
RL-20001	200	**RM0200U55**	0.055	KLR200B
RL-25003	250	**RM0250P15**	0.150	KLR250C
RL-25001	250	**RM0250U45**	0.045	KLR250B
RL-25002	250	**RM0250U90**	0.090	KLR250A
RL-32003	320	**RM0320P13**	0.130	KLR300C
RL-32001	320	**RM0320U40**	0.040	KLR300B
RL-32002	320	**RM0320U75**	0.075	KLR300A
RL-40003	400	**RM0400P11**	0.110	KLR360C
RL-40001	400	**RM0400U30**	0.030	KLR360B
RL-40002	400	**RM0400U61**	0.061	KLR360A
RL-50001	500	**RM0500U25**	0.025	KLR480B
RL-50002	500	**RM0500U50**	0.050	KLR480A
RL-50003	500	**RM0500U85**	0.085	KLR480C
RL-60001	600	**RM0600U20**	0.020	KLR600B
RL-60002	600	**RM0600U40**	0.040	KLR600A
RL-60003	600	**RM0600U65**	0.065	KLR600C

© Hammond Power Solutions Inc.
Data subject to change without notice.

DV/DT Filters

The advent of pulse width modulated (PWM) inverters with IGBT high speed transistors has resulted in smaller more cost effective drives and increased switching speeds. A waveform with increased harmonics at higher frequencies is the result of these much faster switching devices, usually at frequencies of 10,000 to 20,000 Hertz.

Drives and motors often need to be separated by significant distances. For deep wells or mines, the motors are usually controlled on the surface. As a result, the distance between the drive and the motor creates long motor lead lengths. In some plant applications, the motors can withstand the harsh environment, but the sensitive variable frequency drive cannot. This again results in long lead lengths to the motor.

Most manufactures of variable frequency drives will publish a recommended maximum distance between their equipment and the motor. Sometimes these recommendations create application difficulties, thus increased motor lead lengths are inevitable.

DV/DT is explained as the steep-front voltage pulses that travel down these long leads in the circuit to the motor and subsequently reverted back in a “reflective wave”. When the conductors are long enough, usually 20 feet or more, the time for reflection matches the time for transmission resulting in a high amplitude ‘standing wave’ on the circuit. Voltage spikes of up to 2100 volts are frequently experienced for 600 volt systems and motor winding failures are the result.

A DV/DT filter, combines the current limiting ability of an AC line reactor plus a resistive capacitance circuit that forms a damped, low pass filter. It provides protection for the motor by slowing the rate of voltage increase and minimizing the peak voltage that occurs at the motor terminals.

The cost of a DV/DT Filter is a little more than the cost of the reactor and can be mounted next to the drive, or inside the PWM enclosure.

APPLICATIONS

The HPS RC series DV/DT filters are specifically designed for drive/motor applications with long lead lengths (usually where the motor cable length is 20 feet and greater). They should always be installed next to the IGBT variable frequency drive. Typical installation applications include production process lines, conveyor systems and deep wells.

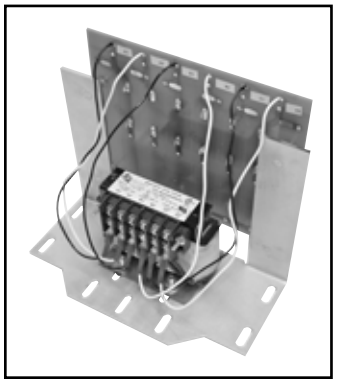

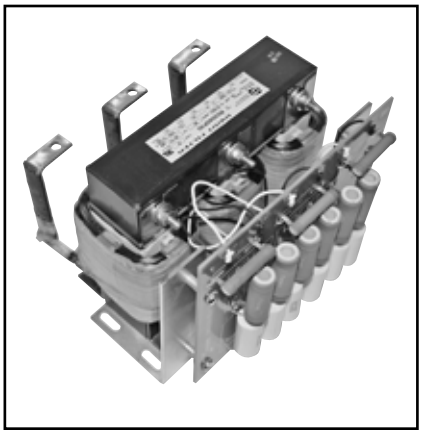

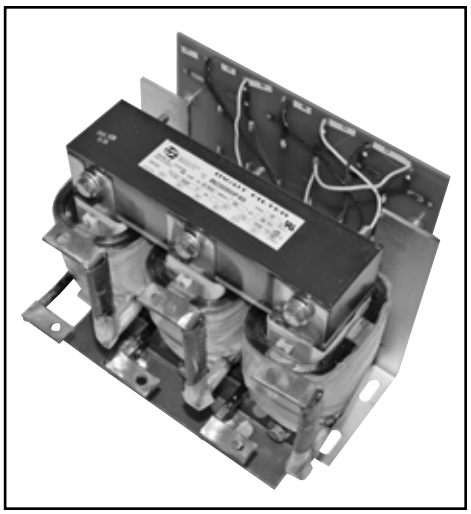

© Hammond Power Solutions Inc.
Data subject to change without notice.

TYPICAL "RC" DV/DT FILTERS PERFORMANCE

The RC series DV/DT filters combine appropriate values of inductance, capacitance and resistance to form a filter which reduces DV/DT and peak voltages from the PWM voltage waveform. This combined with a 3% impedance reactor, that will reduce motor heating harmonics, will significantly increase the life of the motor.

Long lead length motor drive applications can experience motor terminal peak voltage spikes twice the DC bus voltage, and higher. Therefore motor terminal voltage peaks of 1200 volts for 480V drives and 1600 volts for 600V drives are not uncommon. The highest peak voltages will typically occur in lower HP applications.

Standard "RC" DV/DT Filter Specifications

RATINGS:

Nominal Inductance +/- 10% @ rated current.
95% of nominal inductance @ 150% rated current.
50% of nominal inductance @ 350% of rated current.

The above performance indicates that even at very substantial overload conditions (even beyond what other equipment in the circuit could tolerate), the RM Line Reactor will still provide current limiting performance against total harmonic distortion generated by the drive system.

TEMPERATURE RISE:

115° C on units up to 160 amps; average ambient of 40°C.
115° C on units larger than 160 amps; average ambient of 60° C.

INSULATION SYSTEM:

200° C Temperature Class up to 160 amps
220° C Temperature Class over 160 amps

FREQUENCY:

60 Hz Fundamental Current Maximum.

COOLING METHOD:

Natural convection

SYSTEM VOLTAGE:

600 Volts Maximum

APPROVALS:

UL File No.: E61431
CSA File No.: LR 3902

SOUND LEVEL:

2 to 18 amps:	58 dBA
130 to 320 amps:	70 dBA
25 to 100 amps:	64 dBA
400 to 600 amps:	75 dBA

ENCLOSURE: (when specified)

NEMA 2 or NEMA 3R

HARMONIC WITHSTAND:

Hammond DV/DT filters are designed to withstand harmonics associated with the output side of variable speed drives including IGBT type inverters.

SWITCHING FREQUENCY:

2.5 KHz up to 20 KHz.

© Hammond Power Solutions Inc.
Data subject to change without notice.

"RC" DV/DT Filter Selection

SELECTION GUIDELINES

HPS RC filters are current rated devices. Therefore, to properly size and select the correct unit for your application, it is necessary to know the total motor load on the inverter. All RC filters are designed to be located next to the output terminals of the drive with symmetrical configured *three phase* cable used to connect the RC filter to the motor. Placement of these filters anywhere else will negatively impact the units performance.

DV/DT Filter Part Number Guide

RC 0002 M 32 _* __

- Further suffix to follow. **Add suffix "E" for Enclosure.**
- Inductance Value
  The inductance value is preceded with a letter to designate the position of the decimal point to determine the inductance. The letters are as follows:
  'M' XX. mH
  'N' X.X mH
  'P' 0.XX mH
  'U' .0XX mH or XX.0 uH
  Example: M32 is 32.0 mH
- 4 digits for current rating
- DV/DT Filter

Note: As all characters of the P/N represent performance values of the reactor, P/N's are not completely sequential. They are sorted by current rating.

*** Add the Suffix "E" to the standard part number below for an Enclosed unit.**

The DV/DT filters have had the reactor selected in such a manner that the 3% impedance is approximately maintained at both the 600 and 480 system voltage level. Utilizing a 3% reactor provides optimum performance and protection for the motor. Using smaller impedance reactors will not protect against the same current peaks and motor performance would therefore be diminished.

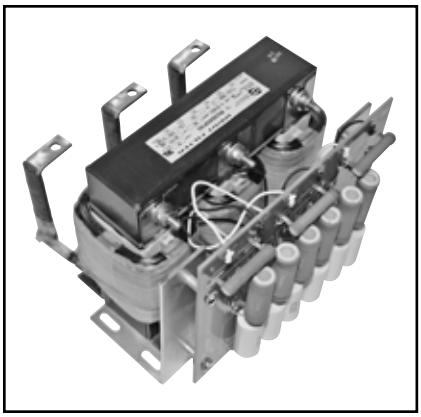

"RC" DV/DT FILTER SELECTION TABLE FOR 600V OR 480V, 3% IMPEDANCE, 60 Hz

Current (Amps)	Part Number	Inductance	Watts Loss	Dimensions					Mtg Slot/ Hole Size	Dim. Fig. # (Page 118)	Encl. Fig. #	Weight (Lbs.)	Enclosed Weight (Lbs.)
				W	D	H	Mtg. W	Mtg. D					
2	**RC0002M12**	12.0	62	9.00	6.18	7.40	8.25	2	.28 x .88	7	N1	4	11
4	**RC0004N65**	6.50	68	9.00	6.18	7.40	8.25	2	.28 x .88	7	N1	5	12
8	**RC0008N30**	3.00	80	9.00	6.18	7.40	8.25	2	.28 x .88	7	N1	5	12
12	**RC0012N25**	2.50	81	9.00	6.18	7.40	8.25	2	.28 x .88	8	N1	10	17
18	**RC0018N15**	1.50	84	9.00	6.18	7.40	8.25	2	.28 x .88	8	N1	11	18
25	**RC0025N12**	1.20	99	9.00	6.18	7.40	8.25	2	.28 x .88	8	N1	12	19
35	**RC0035P80**	0.80	106	9.00	6.18	7.40	8.25	2	.28 x .88	9	N2	19	36
45	**RC0045P70**	0.70	119	9.00	6.42	7.40	8.25	2	.28 x .88	9	N2	24	41
55	**RC0055P50**	0.50	130	9.00	6.27	7.40	8.25	2	.28 x .88	10	N2	28	45
80	**RC0080P40**	0.40	193	9.00	7.83	7.40	8.25	2	.28 x .88	10	N2	38	55
110	**RC0110P30**	0.30	423	14.0	8.70	11.62	3.6/4.8	4.20	.44 X 1.25	11	NH5	55	95
130	**RC0130P20**	0.20	415	14.0	8.20	11.62	3.6/4.8	3.73	.44 X 1.25	11	NH5	44	88
160	**RC0160P15**	0.15	429	14.0	8.70	11.62	3.6/4.8	4.23	.44 X 1.25	11	NH5	49	89
200	**RC0200P11**	0.11	414	14.0	9.23	11.62	3.6/4.8	4.23	.44 X 1.25	11	NH6	55	115
250	**RC0250U90**	0.090	431	14.0	9.73	11.62	3.6/4.8	4.70	.44 X 1.25	11	NH6	68	128
320	**RC0320U75**	0.075	484	14.4	9.50	11.43	4.80	5.94	.44 X 1.00	12	NH6	90	150
400	**RC0400U61**	0.061	477	14.4	11.5	11.43	4.80	6.44	.44 X 1.00	12	NH6	118	178
500	**RC0500U50**	0.05	496	14.4	11.5	11.43	4.80	6.44	.44 X 1.00	12	NH3	154	231
600	**RC0600U40**	0.040	523	14.4	12.0	11.43	4.80	6.94	.44 X 1.00	12	NH4	180	287

Note: Please refer to pages 260 to 264 for enclosure dimensional specifications

© Hammond Power Solutions Inc.
Data subject to change without notice.

Open Style “RM” Reference Drawings

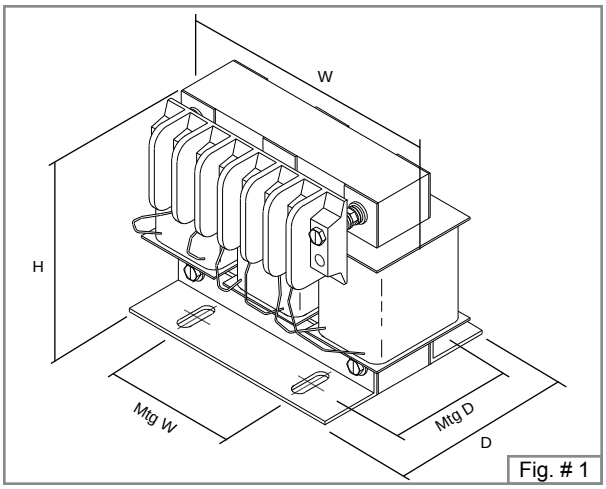

Fig. # 1

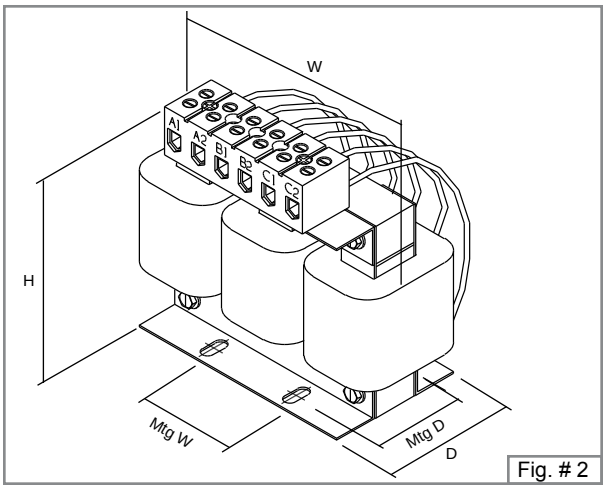

Fig. # 2

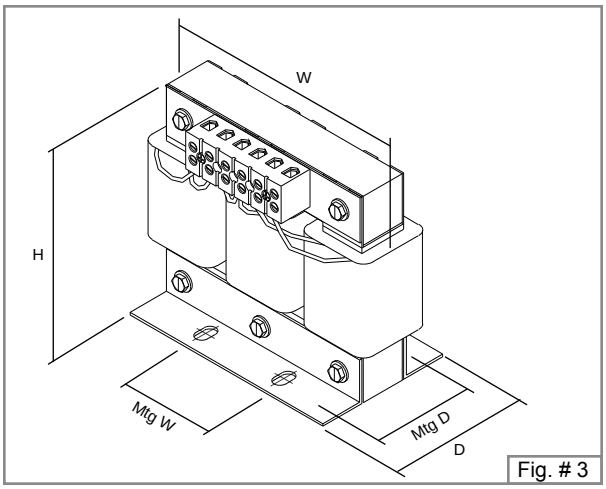

Fig. # 3

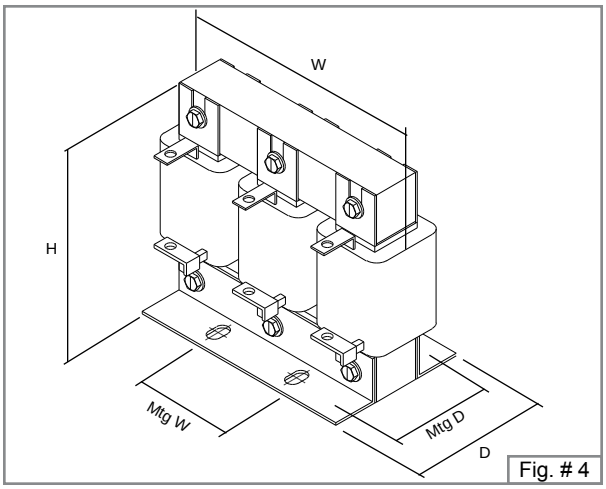

Fig. # 4

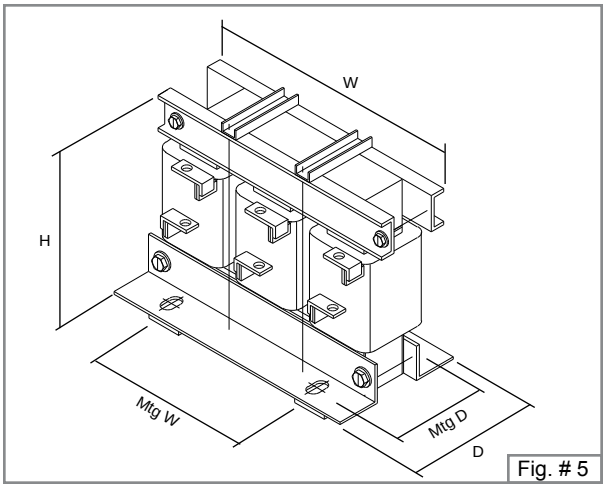

Fig. # 5

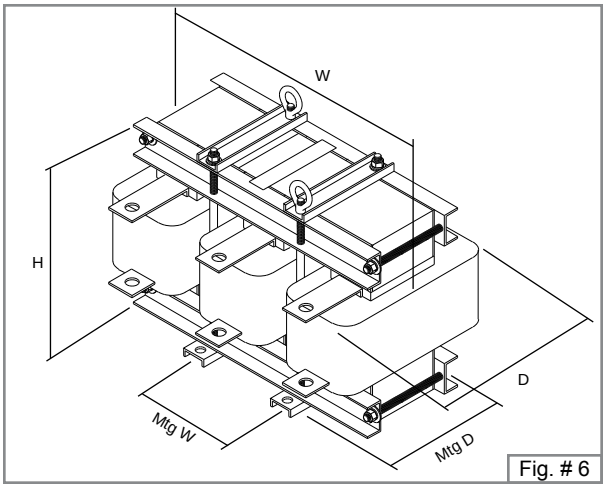

Fig. # 6

© Hammond Power Solutions Inc.
Data subject to change without notice.

Open Style “RC” Reference Drawings

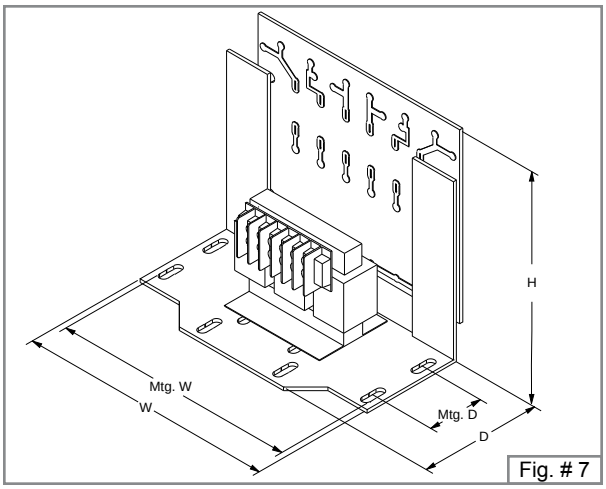

Fig. # 7

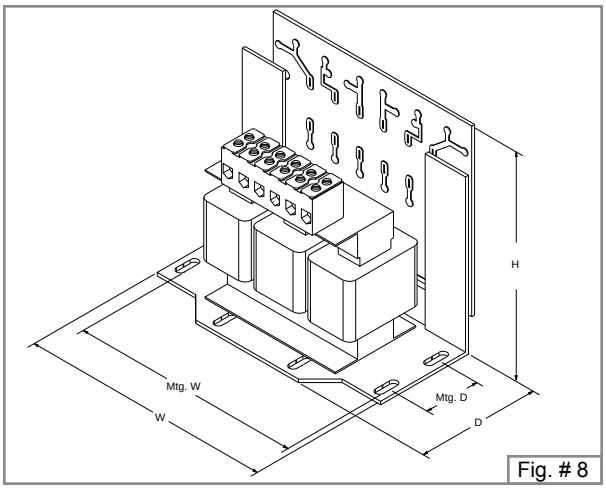

Fig. # 8

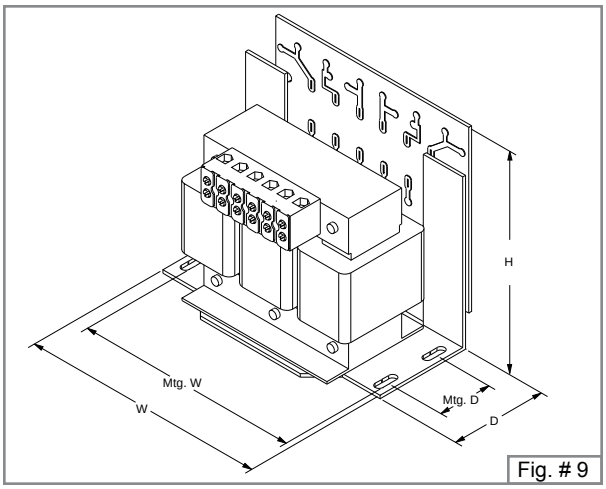

Fig. # 9

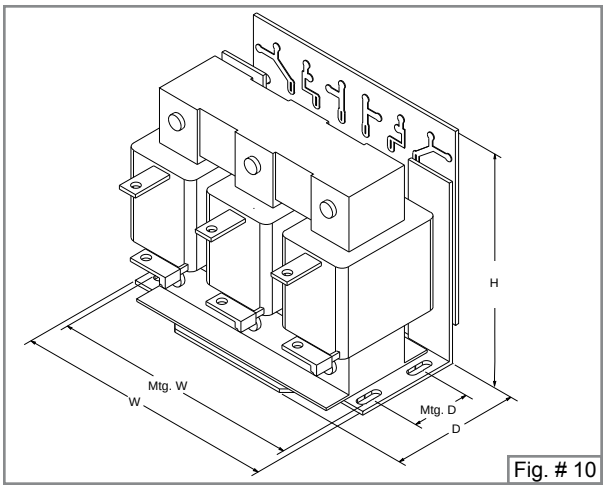

Fig. # 10

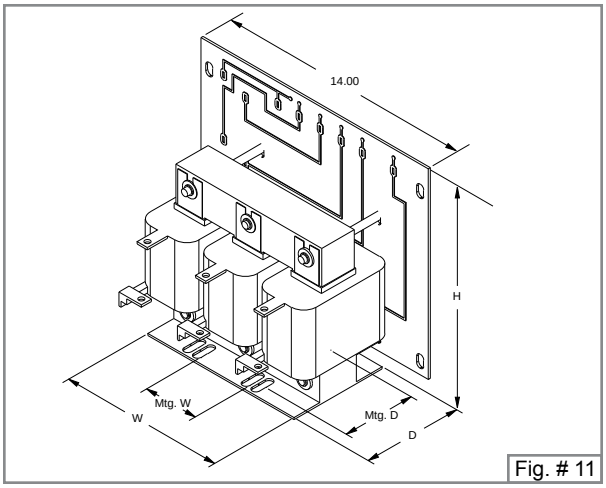

Fig. # 11

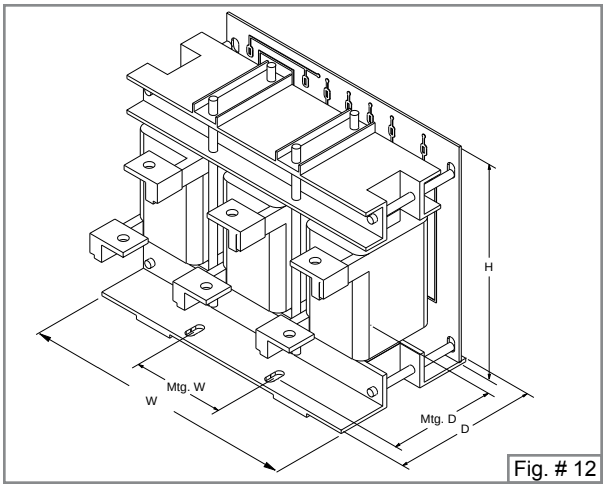

Fig. # 12

© Hammond Power Solutions Inc.
Data subject to change without notice.

SECTION 4

STANDARD & ENERGY EFFICIENT DRIVE ISOLATION TRANSFORMERS

Aluminum and Copper Wound Three Phase

Description and Applications 120
Selecting Drive Isolation Transformers 120

Standard Drive Isolation Transformers:
Standard Aluminum and Copper Specifications 121
Standard Aluminum Selection Tables 122
Standard Copper Selection Tables 126
Termination Details 131

HPS Tribune Energy Efficient Drive Isolation Transformers:
HPS Tribune - Aluminum and Copper Standard Specifications 132
HPS Tribune - Aluminum Selection Tables 133
HPS Tribune - Copper Selection Tables 137
Termination Details 142

Enclosure Drawings 260
Accessories - Enclosure Mounting Kits, Anti-Vibration Pads & Isolators .. 271
Electrical Schematics and Connections 276

THREE PHASE, DRIVE ISOLATION TRANSFORMERS

With today's technological advances in solid-state power control devices, the use of AC and DC variable speed drives has proliferated in many industrial markets. General purpose distribution transformers are not adequate for this type of application.

HPS Drive Isolation Transformers are designed to meet the rugged demands of both AC and DC variable speed drives and also to provide the required voltage change. The separate primary and secondary windings provide electrical isolation between the incoming line and the SCR load. The windings are designed to withstand overcurrent of 150% of the rated load for 60 seconds or 200% of the rated load for 30 seconds. (A duty cycle of one start for every two hours is permitted.)

Drive Isolation Transformers are sized to match standard motor horsepower and voltage ratings. Standard sizes range from 5 to 600 HP in six standard voltages. Non-standard sizes and voltages are available upon request.

SELECTION INSTRUCTIONS

Select the Drive Isolation Transformer according to the recommendations from the motor drive system manufacturer or supplier. If this information is unavailable, use the table below as a guide for selecting the transformer kVA for a required motor horsepower.

Motor H.P.	Transformer kVA
5	7.5
7.5	11
10	14
15	20
20	27
25	34
30	40
40	51
50	63
60	75

Motor H.P.	Transformer kVA
75	93
100	118
125	145
150	175
200	220
250	275
300	330
400	440
500	550
600	660

For termination details see page 131

For accessories see pages 271 to 274

© Hammond Power Solutions Inc.

Data subject to change without notice.

ALUMINUM AND COPPER WOUND FEATURES

THREE PHASE STANDARD SPECIFICATIONS

	7.5 to 175 kVA	220 to 660 kVA
UL Listed	File: E112313	File: E112313
CSA Certified	File: LR3902	File: LR3902
Frequency	60 Hz	60 Hz
Insulation System	220°C (150°C rise) 200°C (130°C rise) on some Copper units up to 40kVA	220°C (150°C rise) (Optional 115°C and 80°C rise available)
Enclosure Type	Heavy Duty Ventilated NEMA Type 3R Optional NEMA 4, 4X(stainless steel) and 12	Heavy Duty Ventilated NEMA Type 3R Optional NEMA 4, 4X(stainless steel) and 12
Enclosure Finish	ANSI 61 Grey, UL50	ANSI 61 Grey, UL50
Neutral	Neutral terminal for field connection (on applicable units).	Neutral terminal for field connection (on applicable units).
Standard Primary Taps	Refer to wiring diagrams for details.	Refer to wiring diagrams for details.
Termination	Front accessible separate high and low voltage terminations; suitable for copper and aluminum are provided for easy cable installation.	Front accessible separate high and low voltage terminations, suitable for copper and aluminum are provided for easy cable installation.
Thermostat	Standard on all units.	Standard on all units.
Conduit Knock-Outs	Standard on all units.	None
Impedance	Typically 3 to 6%	Typically 3 to 6%
Mounting	Floor mounting available on all units. Wall & ceiling mount available on units up to 750 lbs. Refer to selection tables for details.	Floor mounting only.
Short Circuit Withstand	Meets UL and CSA short circuit withstand requirements.	Meets UL and CSA short circuit withstand requirements.

For termination details see page 131

For accessories see pages 271 to 274

© Hammond Power Solutions Inc.

Data subject to change without notice.

Selection Tables

Listed below are our standard voltages. Other primary and secondary voltages available are 240, 380 and 600.

ALUMINUM WOUND, THREE PHASE

208 Delta Primary Volts 480Y Secondary Volts 60 Hz

kVA	Catalog Number	Case Style (Pages 260 - 267)	Dimensions Width	Depth	Height	Approx. Weight (Lbs.)	Mtg Type W - Wall F - Floor	Wiring Diagram (Pages 276 - 288)
7.5	**DM007BK**	NH5	19.40	20.20	21.50	150	F or W *	SCD 8
11	**DM011BK**	NH5	19.40	20.20	21.50	160	F or W *	SCD 8
14	**DM014BK**	NH5	19.40	20.20	21.50	170	F or W *	SCD 8
20	**DM020BK**	NH6	23.90	25.00	28.75	240	F or W *	SCD 7
27	**DM027BK**	NH6	23.90	25.00	28.75	300	F or W *	SCD 7
34	**DM034BK**	NH6	23.90	25.00	28.75	330	F or W *	SCD 7
40	**DM040BK**	NH6	23.90	25.00	28.75	350	F or W *	SCD 7
51	**DM051BK**	NH6	23.90	25.00	28.75	430	F or W *	SCD 7
63	**DM063BK**	NH3	26.00	25.00	38.00	530	F or W *	SCD 7
75	**DM075BK**	NH3	26.00	25.00	38.00	580	F or W *	SCD 7
93	**DM093BK**	NH3	26.00	25.00	38.00	630	F or W *	SCD 7
118	**DM118BK**	NH3	26.00	25.00	38.00	730	F or W *	SCD 7
145	**DM145BK**	NH4	32.00	29.50	41.00	830	F	SCD 7
175	**DM175BK**	NH4	32.00	29.50	41.00	930	F	SCD 7
220	**DM220BK**	NH4	32.00	29.50	41.00	1350	F	SCD 9
275	**DM275BK**	NJ1	39.50	34.00	51.50	1500	F	SCD 9
330	**DM330BK**	NJ1	39.50	34.00	51.50	1700	F	SCD 9
440	**DM440BK**	NJ2	48.50	38.40	59.00	2100	F	SCD 10
550	**DM550BK**	NJ2	48.50	38.40	59.00	2350	F	SCD 10
660	**DM660BK**	NJ3	51.50	43.40	66.00	2900	F	SCD 10

For shielded units, please add the suffix "S" to the above part numbers. (i.e. DM075BKS)

*Wall mounting kit and/or drip plate kit required. Refer to pages 271 to 273 for details.

230 Delta Primary Volts 230Y Secondary Volts 60 Hz

kVA	Catalog Number	Case Style (Pages 260 - 267)	Dimensions Width	Depth	Height	Approx. Weight (Lbs.)	Mtg Type W - Wall F - Floor	Wiring Diagram (Pages 276 - 288)
7.5	**DM007CC**	NH5	19.40	20.20	21.50	150	F or W *	SCD 8
11	**DM011CC**	NH5	19.40	20.20	21.50	160	F or W *	SCD 8
14	**DM014CC**	NH5	19.40	20.20	21.50	170	F or W *	SCD 8
20	**DM020CC**	NH6	23.90	25.00	28.75	240	F or W *	SCD 7
27	**DM027CC**	NH6	23.90	25.00	28.75	300	F or W *	SCD 7
34	**DM034CC**	NH6	23.90	25.00	28.75	330	F or W *	SCD 7
40	**DM040CC**	NH6	23.90	25.00	28.75	350	F or W *	SCD 7
51	**DM051CC**	NH6	23.90	25.00	28.75	430	F or W *	SCD 7
63	**DM063CC**	NH3	26.00	25.00	38.00	530	F or W *	SCD 7
75	**DM075CC**	NH3	26.00	25.00	38.00	580	F or W *	SCD 7
93	**DM093CC**	NH3	26.00	25.00	38.00	630	F or W *	SCD 7
118	**DM118CC**	NH3	26.00	25.00	38.00	730	F or W *	SCD 7
145	**DM145CC**	NH4	32.00	29.50	41.00	830	F	SCD 7
175	**DM175CC**	NH4	32.00	29.50	41.00	930	F	SCD 7
220	**DM220CC**	NH4	32.00	29.50	41.00	1350	F	SCD 9
275	**DM275CC**	NJ1	39.50	34.00	51.50	1500	F	SCD 9
330	**DM330CC**	NJ1	39.50	34.00	51.50	1700	F	SCD 9
440	**DM440CC**	NJ2	48.50	38.40	59.00	2100	F	SCD 10
550	**DM550CC**	NJ2	48.50	38.40	59.00	2350	F	SCD 10
660	**DM660CC**	NJ3	51.50	43.40	66.00	2900	F	SCD 10

For shielded units, please add the suffix "S" to the above part numbers. (i.e. DM075CCS)

*Wall mounting kit and/or drip plate kit required. Refer to pages 271 to 273 for details.

Products listed on this page are available as 'CE Mark' products. Please consult our sales office.

For termination details see page 131

For accessories see pages 271 to 274

© Hammond Power Solutions Inc.

Data subject to change without notice.

Selection Tables

Listed below are our standard voltages. Other primary and secondary voltages available are 240, 380 and 600.

ALUMINUM WOUND, THREE PHASE

460 Delta Primary Volts 230Y Secondary Volts 60 Hz

kVA	Catalog Number	Case Style (Pages 260 - 267)	Dimensions Width	Depth	Height	Approx. Weight (Lbs.)	Mtg Type W - Wall F - Floor	Wiring Diagram (Pages 276 - 288)
7.5	**DM007JC**	NH5	19.40	20.20	21.50	150	F or W *	SCD 8
11	**DM011JC**	NH5	19.40	20.20	21.50	160	F or W *	SCD 8
14	**DM014JC**	NH5	19.40	20.20	21.50	170	F or W *	SCD 8
20	**DM020JC**	NH6	23.90	25.00	28.75	240	F or W *	SCD 7
27	**DM027JC**	NH6	23.90	25.00	28.75	300	F or W *	SCD 7
34	**DM034JC**	NH6	23.90	25.00	28.75	330	F or W *	SCD 7
40	**DM040JC**	NH6	23.90	25.00	28.75	350	F or W *	SCD 7
51	**DM051JC**	NH6	23.90	25.00	28.75	430	F or W *	SCD 7
63	**DM063JC**	NH3	26.00	25.00	38.00	530	F or W *	SCD 7
75	**DM075JC**	NH3	26.00	25.00	38.00	580	F or W *	SCD 7
93	**DM093JC**	NH3	26.00	25.00	38.00	630	F or W *	SCD 7
118	**DM118JC**	NH3	26.00	25.00	38.00	730	F or W *	SCD 7
145	**DM145JC**	NH4	32.00	29.50	41.00	830	F	SCD 7
175	**DM175JC**	NH4	32.00	29.50	41.00	930	F	SCD 7
220	**DM220JC**	NH4	32.00	29.50	41.00	1350	F	SCD 9
275	**DM275JC**	NJ1	39.50	34.00	51.50	1500	F	SCD 9
330	**DM330JC**	NJ1	39.50	34.00	51.50	1700	F	SCD 9
440	**DM440JC**	NJ2	48.50	38.40	59.00	2100	F	SCD 10
550	**DM550JC**	NJ2	48.50	38.40	59.00	2350	F	SCD 10
660	**DM660JC**	NJ3	51.50	43.40	66.00	2900	F	SCD 10

For shielded units, please add the suffix "S" to the above part numbers. (i.e. DM075JCS)

*WALL MOUNTING KIT AND/OR DRIP PLATE KIT REQUIRED. REFER TO PAGES 271 TO 273 FOR DETAILS.

460 Delta Primary Volts 400Y Secondary Volts 60 Hz

kVA	Catalog Number	Case Style (Pages 260 - 267)	Dimensions Width	Depth	Height	Approx. Weight (Lbs.)	Mtg Type W - Wall F - Floor	Wiring Diagram (Pages 276 - 288)
7.5	**DM007JH**	NH5	19.40	20.20	21.50	150	F or W *	SCD 8
11	**DM011JH**	NH5	19.40	20.20	21.50	160	F or W *	SCD 8
14	**DM014JH**	NH5	19.40	20.20	21.50	170	F or W *	SCD 8
20	**DM020JH**	NH6	23.90	25.00	28.75	240	F or W *	SCD 7
27	**DM027JH**	NH6	23.90	25.00	28.75	300	F or W *	SCD 7
34	**DM034JH**	NH6	23.90	25.00	28.75	330	F or W *	SCD 7
40	**DM040JH**	NH6	23.90	25.00	28.75	350	F or W *	SCD 7
51	**DM051JH**	NH6	23.90	25.00	28.75	430	F or W *	SCD 7
63	**DM063JH**	NH3	26.00	25.00	38.00	530	F or W *	SCD 7
75	**DM075JH**	NH3	26.00	25.00	38.00	580	F or W *	SCD 7
93	**DM093JH**	NH3	26.00	25.00	38.00	630	F or W *	SCD 7
118	**DM118JH**	NH3	26.00	25.00	38.00	730	F or W *	SCD 7
145	**DM145JH**	NH4	32.00	29.50	41.00	830	F	SCD 7
175	**DM175JH**	NH4	32.00	29.50	41.00	930	F	SCD 7
220	**DM220JH**	NH4	32.00	29.50	41.00	1350	F	SCD 9
275	**DM275JH**	NJ1	39.50	34.00	51.50	1500	F	SCD 9
330	**DM330JH**	NJ1	39.50	34.00	51.50	1700	F	SCD 9
440	**DM440JH**	NJ2	48.50	38.40	59.00	2100	F	SCD 10
550	**DM550JH**	NJ2	48.50	38.40	59.00	2350	F	SCD 10
660	**DM660JH**	NJ3	51.50	43.40	66.00	2900	F	SCD 10

For shielded units, please add the suffix "S" to the above part numbers. (i.e. DM075JHS)

*WALL MOUNTING KIT AND/OR DRIP PLATE KIT REQUIRED. REFER TO PAGES 271 TO 273 FOR DETAILS.

Products listed on this page are available as 'CE Mark' products. Please consult our sales office.

© Hammond Power Solutions Inc.

Data subject to change without notice.

Selection Tables

Listed below are our standard voltages. Other primary and secondary voltages available are 240, 380 and 600.

ALUMINUM WOUND, THREE PHASE

460 Delta Primary Volts 460Y Secondary Volts 60 Hz

kVA	Catalog Number	Case Style (Pages 260 - 267)	Dimensions Width	Dimensions Depth	Dimensions Height	Approx. Weight (Lbs.)	Mtg Type W - Wall F - Floor	Wiring Diagram (Pages 276 - 288)
7.5	**DM007JJ**	NH5	19.40	20.20	21.50	150	F or W *	SCD 8
11	**DM011JJ**	NH5	19.40	20.20	21.50	160	F or W *	SCD 8
14	**DM014JJ**	NH5	19.40	20.20	21.50	170	F or W *	SCD 8
20	**DM020JJ**	NH6	23.90	25.00	28.75	240	F or W *	SCD 7
27	**DM027JJ**	NH6	23.90	25.00	28.75	300	F or W *	SCD 7
34	**DM034JJ**	NH6	23.90	25.00	28.75	330	F or W *	SCD 7
40	**DM040JJ**	NH6	23.90	25.00	28.75	350	F or W *	SCD 7
51	**DM051JJ**	NH6	23.90	25.00	28.75	430	F or W *	SCD 7
63	**DM063JJ**	NH3	26.00	25.00	38.00	530	F or W *	SCD 7
75	**DM075JJ**	NH3	26.00	25.00	38.00	580	F or W *	SCD 7
93	**DM093JJ**	NH3	26.00	25.00	38.00	630	F or W *	SCD 7
118	**DM118JJ**	NH3	26.00	25.00	38.00	730	F or W *	SCD 7
145	**DM145JJ**	NH4	32.00	29.50	41.00	830	F	SCD 7
175	**DM175JJ**	NH4	32.00	29.50	41.00	930	F	SCD 7
220	**DM220JJ**	NH4	32.00	29.50	41.00	1350	F	SCD 9
275	**DM275JJ**	NJ1	39.50	34.00	51.50	1500	F	SCD 9
330	**DM330JJ**	NJ1	39.50	34.00	51.50	1700	F	SCD 9
440	**DM440JJ**	NJ2	48.50	38.40	59.00	2100	F	SCD 10
550	**DM550JJ**	NJ2	48.50	38.40	59.00	2350	F	SCD 10
660	**DM660JJ**	NJ3	51.50	43.40	66.00	2900	F	SCD 10

For shielded units, please add the suffix "S" to the above part numbers. (i.e. DM075JJS)

*Wall mounting kit and/or drip plate kit required. Refer to pages 271 to 273 for details.

480 Delta Primary Volts 240Y Secondary Volts 60 Hz

kVA	Catalog Number	Case Style (Pages 260 - 267)	Dimensions Width	Dimensions Depth	Dimensions Height	Approx. Weight (Lbs.)	Mtg Type W - Wall F - Floor	Wiring Diagram (Pages 276 - 288)
7.5	**DM007KD**	NH5	19.40	20.20	21.50	150	F or W *	SCD 8
11	**DM011KD**	NH5	19.40	20.20	21.50	160	F or W *	SCD 8
14	**DM014KD**	NH5	19.40	20.20	21.50	170	F or W *	SCD 8
20	**DM020KD**	NH6	23.90	25.00	28.75	240	F or W *	SCD 7
27	**DM027KD**	NH6	23.90	25.00	28.75	300	F or W *	SCD 7
34	**DM034KD**	NH6	23.90	25.00	28.75	330	F or W *	SCD 7
40	**DM040KD**	NH6	23.90	25.00	28.75	350	F or W *	SCD 7
51	**DM051KD**	NH6	23.90	25.00	28.75	430	F or W *	SCD 7
63	**DM063KD**	NH3	26.00	25.00	38.00	530	F or W *	SCD 7
75	**DM075KD**	NH3	26.00	25.00	38.00	580	F or W *	SCD 7
93	**DM093KD**	NH3	26.00	25.00	38.00	630	F or W *	SCD 7
118	**DM118KD**	NH3	26.00	25.00	38.00	730	F or W *	SCD 7
145	**DM145KD**	NH4	32.00	29.50	41.00	830	F	SCD 7
175	**DM175KD**	NH4	32.00	29.50	41.00	930	F	SCD 7
220	**DM220KD**	NH4	32.00	29.50	41.00	1350	F	SCD 9
275	**DM275KD**	NJ1	39.50	34.00	51.50	1500	F	SCD 9
330	**DM330KD**	NJ1	39.50	34.00	51.50	1700	F	SCD 9
440	**DM440KD**	NJ2	48.50	38.40	59.00	2100	F	SCD 10
550	**DM550KD**	NJ2	48.50	38.40	59.00	2350	F	SCD 10
660	**DM660KD**	NJ3	51.50	43.40	66.00	2900	F	SCD 10

For shielded units, please add the suffix "S" to the above part numbers. (i.e. DM075KDS)

*Wall mounting kit and/or drip plate kit required. Refer to pages 271 to 273 for details.

Products listed on this page are available as 'CE Mark' products. Please consult our sales office.

For termination details see page 131

For accessories see pages 271 to 274

© Hammond Power Solutions Inc.

Data subject to change without notice.

Selection Tables

Listed below are our standard voltages. Other primary and secondary voltages available are 240, 380 and 600.

ALUMINUM WOUND, THREE PHASE

480 Delta Primary Volts 480Y Secondary Volts 60 Hz

kVA	Catalog Number	Case Style (Pages 260 - 267)	Dimensions Width	Depth	Height	Approx. Weight (Lbs.)	Mtg Type W - Wall F - Floor	Wiring Diagram (Pages 276 - 288)
7.5	**DM007KK**	NH5	19.40	20.20	21.50	150	F or W *	SCD 8
11	**DM011KK**	NH5	19.40	20.20	21.50	160	F or W *	SCD 8
14	**DM014KK**	NH5	19.40	20.20	21.50	170	F or W *	SCD 8
20	**DM020KK**	NH6	23.90	25.00	28.75	240	F or W *	SCD 7
27	**DM027KK**	NH6	23.90	25.00	28.75	300	F or W *	SCD 7
34	**DM034KK**	NH6	23.90	25.00	28.75	330	F or W *	SCD 7
40	**DM040KK**	NH6	23.90	25.00	28.75	350	F or W *	SCD 7
51	**DM051KK**	NH6	23.90	25.00	28.75	430	F or W *	SCD 7
63	**DM063KK**	NH3	26.00	25.00	38.00	530	F or W *	SCD 7
75	**DM075KK**	NH3	26.00	25.00	38.00	580	F or W *	SCD 7
93	**DM093KK**	NH3	26.00	25.00	38.00	630	F or W *	SCD 7
118	**DM118KK**	NH3	26.00	25.00	38.00	730	F or W *	SCD 7
145	**DM145KK**	NH4	32.00	29.50	41.00	830	F	SCD 7
175	**DM175KK**	NH4	32.00	29.50	41.00	930	F	SCD 7
220	**DM220KK**	NH4	32.00	29.50	41.00	1350	F	SCD 9
275	**DM275KK**	NJ1	39.50	34.00	51.50	1500	F	SCD 9
330	**DM330KK**	NJ1	39.50	34.00	51.50	1700	F	SCD 9
440	**DM440KK**	NJ2	48.50	38.40	59.00	2100	F	SCD 10
550	**DM550KK**	NJ2	48.50	38.40	59.00	2350	F	SCD 10
660	**DM660KK**	NJ3	51.50	43.40	66.00	2900	F	SCD 10

For shielded units, please add the suffix "S" to the above part numbers. (i.e. DM075KKS)

*WALL MOUNTING KIT AND/OR DRIP PLATE KIT REQUIRED. REFER TO PAGES 271 TO 273 FOR DETAILS.

575 Delta Primary Volts 460Y Secondary Volts 60 Hz

kVA	Catalog Number	Case Style (Pages 260 - 267)	Dimensions Width	Depth	Height	Approx. Weight (Lbs.)	Mtg Type W - Wall F - Floor	Wiring Diagram (Pages 276 - 288)
7.5	**DM007NJ**	NH5	19.40	20.20	21.50	150	F or W *	SCD 8
11	**DM011NJ**	NH5	19.40	20.20	21.50	160	F or W *	SCD 8
14	**DM014NJ**	NH5	19.40	20.20	21.50	170	F or W *	SCD 8
20	**DM020NJ**	NH6	23.90	25.00	28.75	240	F or W *	SCD 7
27	**DM027NJ**	NH6	23.90	25.00	28.75	300	F or W *	SCD 7
34	**DM034NJ**	NH6	23.90	25.00	28.75	330	F or W *	SCD 7
40	**DM040NJ**	NH6	23.90	25.00	28.75	350	F or W *	SCD 7
51	**DM051NJ**	NH6	23.90	25.00	28.75	430	F or W *	SCD 7
63	**DM063NJ**	NH3	26.00	25.00	38.00	530	F or W *	SCD 7
75	**DM075NJ**	NH3	26.00	25.00	38.00	580	F or W *	SCD 7
93	**DM093NJ**	NH3	26.00	25.00	38.00	630	F or W *	SCD 7
118	**DM118NJ**	NH3	26.00	25.00	38.00	730	F or W *	SCD 7
145	**DM145NJ**	NH4	32.00	29.50	41.00	830	F	SCD 7
175	**DM175NJ**	NH4	32.00	29.50	41.00	930	F	SCD 7
220	**DM220NJ**	NH4	32.00	29.50	41.00	1350	F	SCD 9
275	**DM275NJ**	NJ1	39.50	34.00	51.50	1500	F	SCD 9
330	**DM330NJ**	NJ1	39.50	34.00	51.50	1700	F	SCD 9
440	**DM440NJ**	NJ2	48.50	38.40	59.00	2100	F	SCD 10
550	**DM550NJ**	NJ2	48.50	38.40	59.00	2350	F	SCD 10
660	**DM660NJ**	NJ3	51.50	43.40	66.00	2900	F	SCD 10

For shielded units, please add the suffix "S" to the above part numbers. (i.e. DM075NJS)

*WALL MOUNTING KIT AND/OR DRIP PLATE KIT REQUIRED. REFER TO PAGES 271 TO 273 FOR DETAILS.

Products listed on this page are available as 'CE Mark' products. Please consult our sales office.

© Hammond Power Solutions Inc.

Data subject to change without notice.

Selection Tables

Listed below are our standard voltages. Other primary and secondary voltages available are 240, 380 and 600.

ALUMINUM WOUND, THREE PHASE

575 Delta Primary Volts **575Y Secondary Volts** **60 Hz**

kVA	Catalog Number	Case Style (Pages 260 - 267)	Dimensions Width	Depth	Height	Approx. Weight (Lbs.)	Mtg Type W - Wall F - Floor	Wiring Diagram (Pages 276 - 288)
7.5	**DM007NN**	NH5	19.40	20.20	21.50	150	F or W *	SCD 8
11	**DM011NN**	NH5	19.40	20.20	21.50	160	F or W *	SCD 8
14	**DM014NN**	NH5	19.40	20.20	21.50	170	F or W *	SCD 8
20	**DM020NN**	NH6	23.90	25.00	28.75	240	F or W *	SCD 7
27	**DM027NN**	NH6	23.90	25.00	28.75	300	F or W *	SCD 7
34	**DM034NN**	NH6	23.90	25.00	28.75	330	F or W *	SCD 7
40	**DM040NN**	NH6	23.90	25.00	28.75	350	F or W *	SCD 7
51	**DM051NN**	NH6	23.90	25.00	28.75	430	F or W *	SCD 7
63	**DM063NN**	NH3	26.00	25.00	38.00	530	F or W *	SCD 7
75	**DM075NN**	NH3	26.00	25.00	38.00	580	F or W *	SCD 7
93	**DM093NN**	NH3	26.00	25.00	38.00	630	F or W *	SCD 7
118	**DM118NN**	NH3	26.00	25.00	38.00	730	F or W *	SCD 7
145	**DM145NN**	NH4	32.00	29.50	41.00	830	F	SCD 7
175	**DM175NN**	NH4	32.00	29.50	41.00	930	F	SCD 7
220	**DM220NN**	NH4	32.00	29.50	41.00	1350	F	SCD 9
275	**DM275NN**	NJ1	39.50	34.00	51.50	1500	F	SCD 9
330	**DM330NN**	NJ1	39.50	34.00	51.50	1700	F	SCD 9
440	**DM440NN**	NJ2	48.50	38.40	59.00	2100	F	SCD 10
550	**DM550NN**	NJ2	48.50	38.40	59.00	2350	F	SCD 10
660	**DM660NN**	NJ3	51.50	43.40	66.00	2900	F	SCD 10

For shielded units, please add the suffix "S" to the above part numbers. (i.e. DM075NNS)

*Wall mounting kit and/or drip plate kit required. Refer to pages 271 to 273 for details.

COPPER WOUND, THREE PHASE

208 Delta Primary Volts **480Y Secondary Volts** **60 Hz**

kVA	Catalog Number	Case Style (Pages 260 - 267)	Dimensions Width	Depth	Height	Approx. Weight (Lbs.)	Mtg Type W - Wall F - Floor	Wiring Diagram (Pages 276 - 288)
7.5	**DM007BKCN**	NH5	19.40	20.20	21.50	150	F or W *	SCD 8
11	**DM011BKCN**	NH5	19.40	20.20	21.50	170	F or W *	SCD 8
14	**DM014BKCN**	NH5	19.40	20.20	21.50	210	F or W *	SCD 8
20	**DM020BKC**	NH6	23.90	25.00	28.75	270	F or W *	SCD 7
27	**DM027BKC**	NH6	23.90	25.00	28.75	330	F or W *	SCD 7
34	**DM034BKC**	NH6	23.90	25.00	28.75	350	F or W *	SCD 7
40	**DM040BKC**	NH6	23.90	25.00	28.75	380	F or W *	SCD 7
51	**DM051BKC**	NH6	23.90	25.00	28.75	450	F or W *	SCD 7
63	**DM063BKC**	NH3	26.00	25.00	38.00	550	F or W *	SCD 7
75	**DM075BKC**	NH3	26.00	25.00	38.00	600	F or W *	SCD 7
93	**DM093BKC**	NH3	26.00	25.00	38.00	630	F or W *	SCD 7
118	**DM118BKC**	NH3	26.00	25.00	38.00	880	F	SCD 7
145	**DM145BKC**	NH4	32.00	29.50	41.00	930	F	SCD 7
175	**DM175BKC**	NH4	32.00	29.50	41.00	1100	F	SCD 7
220	**DM220BKC**	NH4	32.00	29.50	41.00	1450	F	SCD 9
275	**DM275BKC**	NJ1	39.50	34.00	51.50	1680	F	SCD 9
330	**DM330BKC**	NJ1	39.50	34.00	51.50	1850	F	SCD 9
440	**DM440BKC**	NJ2	48.50	38.40	59.00	2350	F	SCD 10
550	**DM550BKC**	NJ2	48.50	38.40	59.00	2800	F	SCD 10
660	**DM660BKC**	NJ3	51.50	43.40	66.00	3250	F	SCD 10

For shielded units, please replace the suffix "C" with a 'K' on the above part numbers. (i.e. DM075BKK)

*Wall mounting kit and/or drip plate kit required. Refer to pages 271 to 273 for details.

Products listed on this page are available as 'CE Mark' products. Please consult our sales office.

For termination details see page 131

For accessories see pages 271 to 274

© Hammond Power Solutions Inc.

Data subject to change without notice.

Selection Tables

Listed below are our standard voltages. Other primary and secondary voltages available are 240, 380 and 600.

COPPER WOUND, THREE PHASE

230 Delta Primary Volts 230Y Secondary Volts 60 Hz

kVA	Catalog Number	Case Style (Pages 260 - 267)	Dimensions Width	Depth	Height	Approx. Weight (Lbs.)	Mtg Type W - Wall F - Floor	Wiring Diagram (Pages 276 - 288)
7.5	**DM007CCCN**	NH5	19.40	20.20	21.50	150	F or W *	SCD 8
11	**DM011CCCN**	NH5	19.40	20.20	21.50	170	F or W *	SCD 8
14	**DM014CCCN**	NH5	19.40	20.20	21.50	210	F or W *	SCD 8
20	**DM020CCC**	NH6	23.90	25.00	28.75	270	F or W *	SCD 7
27	**DM027CCC**	NH6	23.90	25.00	28.75	330	F or W *	SCD 7
34	**DM034CCC**	NH6	23.90	25.00	28.75	350	F or W *	SCD 7
40	**DM040CCC**	NH6	23.90	25.00	28.75	380	F or W *	SCD 7
51	**DM051CCC**	NH6	23.90	25.00	28.75	450	F or W *	SCD 7
63	**DM063CCC**	NH3	26.00	25.00	38.00	550	F or W *	SCD 7
75	**DM075CCC**	NH3	26.00	25.00	38.00	600	F or W *	SCD 7
93	**DM093CCC**	NH3	26.00	25.00	38.00	630	F or W *	SCD 7
118	**DM118CCC**	NH3	26.00	25.00	38.00	880	F	SCD 7
145	**DM145CCC**	NH4	32.00	29.50	41.00	930	F	SCD 7
175	**DM175CCC**	NH4	32.00	29.50	41.00	1100	F	SCD 7
220	**DM220CCC**	NH4	32.00	29.50	41.00	1450	F	SCD 9
275	**DM275CCC**	NJ1	39.50	34.00	51.50	1680	F	SCD 9
330	**DM330CCC**	NJ1	39.50	34.00	51.50	1850	F	SCD 9
440	**DM440CCC**	NJ2	48.50	38.40	59.00	2350	F	SCD 10
550	**DM550CCC**	NJ2	48.50	38.40	59.00	2800	F	SCD 10
660	**DM660CCC**	NJ3	51.50	43.40	66.00	3250	F	SCD 10

For shielded units, please replace the suffix "C" with a 'K' on the above part numbers. (i.e. DM075CCK)

*Wall mounting kit and/or drip plate kit required. Refer to pages 271 to 273 for details.

460 Delta Primary Volts 230Y Secondary Volts 60 Hz

kVA	Catalog Number	Case Style (Pages 260 - 267)	Dimensions Width	Depth	Height	Approx. Weight (Lbs.)	Mtg Type W - Wall F - Floor	Wiring Diagram (Pages 276 - 288)
7.5	**DM007JCCN**	NH5	19.40	20.20	21.50	150	F or W *	SCD 8
11	**DM011JCCN**	NH5	19.40	20.20	21.50	170	F or W *	SCD 8
14	**DM014JCCN**	NH5	19.40	20.20	21.50	210	F or W *	SCD 8
20	**DM020JCCN**	NH6	23.90	25.00	28.75	270	F or W *	SCD 7
27	**DM027JCCN**	NH6	23.90	25.00	28.75	330	F or W *	SCD 7
34	**DM034JCC**	NH6	23.90	25.00	28.75	350	F or W *	SCD 7
40	**DM040JCC**	NH6	23.90	25.00	28.75	380	F or W *	SCD 7
51	**DM051JCC**	NH6	23.90	25.00	28.75	450	F or W *	SCD 7
63	**DM063JCC**	NH3	26.00	25.00	38.00	550	F or W *	SCD 7
75	**DM075JCC**	NH3	26.00	25.00	38.00	600	F or W *	SCD 7
93	**DM093JCC**	NH3	26.00	25.00	38.00	630	F or W *	SCD 7
118	**DM118JCC**	NH3	26.00	25.00	38.00	880	F	SCD 7
145	**DM145JCC**	NH4	32.00	29.50	41.00	930	F	SCD 7
175	**DM175JCC**	NH4	32.00	29.50	41.00	1100	F	SCD 7
220	**DM220JCC**	NH4	32.00	29.50	41.00	1450	F	SCD 9
275	**DM275JCC**	NJ1	39.50	34.00	51.50	1680	F	SCD 9
330	**DM330JCC**	NJ1	39.50	34.00	51.50	1850	F	SCD 9
440	**DM440JCC**	NJ2	48.50	38.40	59.00	2350	F	SCD 10
550	**DM550JCC**	NJ2	48.50	38.40	59.00	2800	F	SCD 10
660	**DM660JCC**	NJ3	51.50	43.40	66.00	3250	F	SCD 10

For shielded units, please replace the suffix "C" with a 'K' on the above part numbers. (i.e. DM075JCK)

*Wall mounting kit and/or drip plate kit required. Refer to pages 271 to 273 for details.

Products listed on this page are available as 'CE Mark' products. Please consult our sales office.

For termination details see page 131

For accessories see pages 271 to 274

© Hammond Power Solutions Inc.

Data subject to change without notice.

Selection Tables

Listed below are our standard voltages. Other primary and secondary voltages available are 240, 380 and 600.

COPPER WOUND, THREE PHASE

460 Delta Primary Volts 400Y Secondary Volts 60 Hz

kVA	Catalog Number	Case Style (Pages 260 - 267)	Dimensions Width	Dimensions Depth	Dimensions Height	Approx. Weight (Lbs.)	Mtg Type W - Wall F - Floor	Wiring Diagram (Pages 276 - 288)
7.5	**DM007JHCN**	NH5	19.40	20.20	21.50	150	F or W *	SCD 8
11	**DM011JHCN**	NH5	19.40	20.20	21.50	170	F or W *	SCD 8
14	**DM014JHCN**	NH5	19.40	20.20	21.50	210	F or W *	SCD 8
20	**DM020JHCN**	NH6	23.90	25.00	28.75	270	F or W *	SCD 7
27	**DM027JHCN**	NH6	23.90	25.00	28.75	330	F or W *	SCD 7
34	**DM034JHC**	NH6	23.90	25.00	28.75	350	F or W *	SCD 7
40	**DM040JHC**	NH6	23.90	25.00	28.75	380	F or W *	SCD 7
51	**DM051JHC**	NH6	23.90	25.00	28.75	450	F or W *	SCD 7
63	**DM063JHC**	NH3	26.00	25.00	38.00	550	F or W *	SCD 7
75	**DM075JHC**	NH3	26.00	25.00	38.00	600	F or W *	SCD 7
93	**DM093JHC**	NH3	26.00	25.00	38.00	630	F or W *	SCD 7
118	**DM118JHC**	NH3	26.00	25.00	38.00	880	F	SCD 7
145	**DM145JHC**	NH4	32.00	29.50	41.00	930	F	SCD 7
175	**DM175JHC**	NH4	32.00	29.50	41.00	1100	F	SCD 7
220	**DM220JHC**	NH4	32.00	29.50	41.00	1450	F	SCD 9
275	**DM275JHC**	NJ1	39.50	34.00	51.50	1680	F	SCD 9
330	**DM330JHC**	NJ1	39.50	34.00	51.50	1850	F	SCD 9
440	**DM440JHC**	NJ2	48.50	38.40	59.00	2350	F	SCD 10
550	**DM550JHC**	NJ2	48.50	38.40	59.00	2800	F	SCD 10
660	**DM660JHC**	NJ3	51.50	43.40	66.00	3250	F	SCD 10

For shielded units, please replace the suffix "C" with a 'K' on the above part numbers. (i.e. DM075JHK)

*WALL MOUNTING KIT AND/OR DRIP PLATE KIT REQUIRED. REFER TO PAGES 271 TO 273 FOR DETAILS.

460 Delta Primary Volts 460Y Secondary Volts 60 Hz

kVA	Catalog Number	Case Style (Pages 260 - 267)	Dimensions Width	Dimensions Depth	Dimensions Height	Approx. Weight (Lbs.)	Mtg Type W - Wall F - Floor	Wiring Diagram (Pages 276-288)
7.5	**DM007JJCN**	NH5	19.40	20.20	21.50	150	F or W *	SCD 8
11	**DM011JJCN**	NH5	19.40	20.20	21.50	170	F or W *	SCD 8
14	**DM014JJCN**	NH5	19.40	20.20	21.50	210	F or W *	SCD 8
20	**DM020JJCN**	NH6	23.90	25.00	28.75	270	F or W *	SCD 7
27	**DM027JJCN**	NH6	23.90	25.00	28.75	330	F or W *	SCD 7
34	**DM034JJC**	NH6	23.90	25.00	28.75	350	F or W *	SCD 7
40	**DM040JJC**	NH6	23.90	25.00	28.75	380	F or W *	SCD 7
51	**DM051JJC**	NH6	23.90	25.00	28.75	450	F or W *	SCD 7
63	**DM063JJC**	NH3	26.00	25.00	38.00	550	F or W *	SCD 7
75	**DM075JJC**	NH3	26.00	25.00	38.00	600	F or W *	SCD 7
93	**DM093JJC**	NH3	26.00	25.00	38.00	630	F or W *	SCD 7
118	**DM118JJC**	NH3	26.00	25.00	38.00	880	F	SCD 7
145	**DM145JJC**	NH4	32.00	29.50	41.00	930	F	SCD 7
175	**DM175JJC**	NH4	32.00	29.50	41.00	1100	F	SCD 7
220	**DM220JJC**	NH4	32.00	29.50	41.00	1450	F	SCD 9
275	**DM275JJC**	NJ1	39.50	34.00	51.50	1680	F	SCD 9
330	**DM330JJC**	NJ1	39.50	34.00	51.50	1850	F	SCD 9
440	**DM440JJC**	NJ2	48.50	38.40	59.00	2350	F	SCD 10
550	**DM550JJC**	NJ2	48.50	38.40	59.00	2800	F	SCD 10
660	**DM660JJC**	NJ3	51.50	43.40	66.00	3250	F	SCD 10

For shielded units, please replace the suffix "C" with a 'K' on the above part numbers. (i.e. DM075JJK)

*WALL MOUNTING KIT AND/OR DRIP PLATE KIT REQUIRED. REFER TO PAGES 271 TO 273 FOR DETAILS.

Products listed on this page are available as 'CE Mark' products. Please consult our sales office.

© Hammond Power Solutions Inc.

Data subject to change without notice.

Selection Tables

Listed below are our standard voltages. Other primary and secondary voltages available are 240, 380 and 600.

COPPER WOUND, THREE PHASE

480 Delta Primary Volts 240Y Secondary Volts 60 Hz

kVA	Catalog Number	Case Style (Pages 260 - 267)	Dimensions Width	Dimensions Depth	Dimensions Height	Approx. Weight (Lbs.)	Mtg Type W - Wall F - Floor	Wiring Diagram (Pages 276 - 288)
7.5	**DM007KDCN**	NH5	19.40	20.20	21.50	150	F or W *	SCD 8
11	**DM011KDCN**	NH5	19.40	20.20	21.50	170	F or W *	SCD 8
14	**DM014KDCN**	NH5	19.40	20.20	21.50	210	F or W *	SCD 8
20	**DM020KDCN**	NH6	23.90	25.00	28.75	270	F or W *	SCD 7
27	**DM027KDCN**	NH6	23.90	25.00	28.75	330	F or W *	SCD 7
34	**DM034KDCN**	NH6	23.90	25.00	28.75	350	F or W *	SCD 7
40	**DM040KDC**	NH6	23.90	25.00	28.75	380	F or W *	SCD 7
51	**DM051KDC**	NH6	23.90	25.00	28.75	450	F or W *	SCD 7
63	**DM063KDC**	NH3	26.00	25.00	38.00	550	F or W *	SCD 7
75	**DM075KDC**	NH3	26.00	25.00	38.00	600	F or W *	SCD 7
93	**DM093KDC**	NH3	26.00	25.00	38.00	630	F or W *	SCD 7
118	**DM118KDC**	NH3	26.00	25.00	38.00	880	F	SCD 7
145	**DM145KDC**	NH4	32.00	29.50	41.00	930	F	SCD 7
175	**DM175KDC**	NH4	32.00	29.50	41.00	1100	F	SCD 7
220	**DM220KDC**	NH4	32.00	29.50	41.00	1450	F	SCD 9
275	**DM275KDC**	NJ1	39.50	34.00	51.50	1680	F	SCD 9
330	**DM330KDC**	NJ1	39.50	34.00	51.50	1850	F	SCD 9
440	**DM440KDC**	NJ2	48.50	38.40	59.00	2350	F	SCD 10
550	**DM550KDC**	NJ2	48.50	38.40	59.00	2800	F	SCD 10
660	**DM660KDC**	NJ3	51.50	43.40	66.00	3250	F	SCD 10

For shielded units, please replace the suffix "C" with a 'K' on the above part numbers. (i.e. DM075KDK)

*Wall mounting kit and/or drip plate kit required. Refer to pages 271 to 273 for details.

480 Delta Primary Volts 480Y Secondary Volts 60 Hz

kVA	Catalog Number	Case Style (Pages 260 - 267)	Dimensions Width	Dimensions Depth	Dimensions Height	Approx. Weight (Lbs.)	Mtg Type W - Wall F - Floor	Wiring Diagram (Pages 276 - 288)
7.5	**DM007KKCN**	NH5	19.40	20.20	21.50	150	F or W *	SCD 8
11	**DM011KKCN**	NH5	19.40	20.20	21.50	170	F or W *	SCD 8
14	**DM014KKCN**	NH5	19.40	20.20	21.50	210	F or W *	SCD 8
20	**DM020KKCN**	NH6	23.90	25.00	28.75	270	F or W *	SCD 7
27	**DM027KKCN**	NH6	23.90	25.00	28.75	330	F or W *	SCD 7
34	**DM034KKCN**	NH6	23.90	25.00	28.75	350	F or W *	SCD 7
40	**DM040KKC**	NH6	23.90	25.00	28.75	380	F or W *	SCD 7
51	**DM051KKC**	NH6	23.90	25.00	28.75	450	F or W *	SCD 7
63	**DM063KKC**	NH3	26.00	25.00	38.00	550	F or W *	SCD 7
75	**DM075KKC**	NH3	26.00	25.00	38.00	600	F or W *	SCD 7
93	**DM093KKC**	NH3	26.00	25.00	38.00	630	F or W *	SCD 7
118	**DM118KKC**	NH3	26.00	25.00	38.00	880	F	SCD 7
145	**DM145KKC**	NH4	32.00	29.50	41.00	930	F	SCD 7
175	**DM175KKC**	NH4	32.00	29.50	41.00	1100	F	SCD 7
220	**DM220KKC**	NH4	32.00	29.50	41.00	1450	F	SCD 9
275	**DM275KKC**	NJ1	39.50	34.00	51.50	1680	F	SCD 9
330	**DM330KKC**	NJ1	39.50	34.00	51.50	1850	F	SCD 9
440	**DM440KKC**	NJ2	48.50	38.40	59.00	2350	F	SCD 10
550	**DM550KKC**	NJ2	48.50	38.40	59.00	2800	F	SCD 10
660	**DM660KKC**	NJ3	51.50	43.40	66.00	3250	F	SCD 10

For shielded units, please replace the suffix "C" with a 'K' on the above part numbers. (i.e. DM075KKK)

*Wall mounting kit and/or drip plate kit required. Refer to pages 271 to 273 for details.

© Hammond Power Solutions Inc.

Data subject to change without notice.

Selection Tables

Listed below are our standard voltages. Other primary and secondary voltages available are 240, 380 and 600.

COPPER WOUND, THREE PHASE

575 Delta Primary Volts 460Y Secondary Volts 60 Hz

kVA	Catalog Number	Case Style (Pages 260 - 267)	Dimensions Width	Depth	Height	Approx. Weight (Lbs.)	Mtg Type W - Wall F - Floor	Wiring Diagram (Pages 276 - 288)
7.5	**DM007NJCN**	NH5	19.40	20.20	21.50	150	F or W *	SCD 8
11	**DM011NJCN**	NH5	19.40	20.20	21.50	170	F or W *	SCD 8
14	**DM014NJCN**	NH5	19.40	20.20	21.50	210	F or W *	SCD 8
20	**DM020NJCN**	NH6	23.90	25.00	28.75	270	F or W *	SCD 7
27	**DM027NJCN**	NH6	23.90	25.00	28.75	330	F or W *	SCD 7
34	**DM034NJCN**	NH6	23.90	25.00	28.75	350	F or W *	SCD 7
40	**DM040NJCN**	NH6	23.90	25.00	28.75	380	F or W *	SCD 7
51	**DM051NJC**	NH6	23.90	25.00	28.75	450	F or W *	SCD 7
63	**DM063NJC**	NH3	26.00	25.00	38.00	550	F or W *	SCD 7
75	**DM075NJC**	NH3	26.00	25.00	38.00	600	F or W *	SCD 7
93	**DM093NJC**	NH3	26.00	25.00	38.00	630	F or W *	SCD 7
118	**DM118NJC**	NH3	26.00	25.00	38.00	880	F	SCD 7
145	**DM145NJC**	NH4	32.00	29.50	41.00	930	F	SCD 7
175	**DM175NJC**	NH4	32.00	29.50	41.00	1100	F	SCD 7
220	**DM220NJC**	NH4	32.00	29.50	41.00	1450	F	SCD 9
275	**DM275NJC**	NJ1	39.50	34.00	51.50	1680	F	SCD 9
330	**DM330NJC**	NJ1	39.50	34.00	51.50	1850	F	SCD 9
440	**DM440NJC**	NJ2	48.50	38.40	59.00	2350	F	SCD 10
550	**DM550NJC**	NJ2	48.50	38.40	59.00	2800	F	SCD 10
660	**DM660NJC**	NJ3	51.50	43.40	66.00	3250	F	SCD 10

For shielded units, please replace the suffix "C" with a 'K' on the above part numbers. (i.e. DM075NJK)

*Wall mounting kit and/or drip plate kit required. Refer to pages 271 to 273 for details.

575 Delta Primary Volts 575Y Secondary Volts 60 Hz

kVA	Catalog Number	Case Style (Pages 260 - 267)	Dimensions Width	Depth	Height	Approx. Weight (Lbs.)	Mtg Type W - Wall F - Floor	Wiring Diagram (Pages 276 - 288)
7.5	**DM007NNCN**	NH5	19.40	20.20	21.50	150	F or W *	SCD 8
11	**DM011NNCN**	NH5	19.40	20.20	21.50	170	F or W *	SCD 8
14	**DM014NNCN**	NH5	19.40	20.20	21.50	210	F or W *	SCD 8
20	**DM020NNCN**	NH6	23.90	25.00	28.75	270	F or W *	SCD 7
27	**DM027NNCN**	NH6	23.90	25.00	28.75	330	F or W *	SCD 7
34	**DM034NNCN**	NH6	23.90	25.00	28.75	350	F or W *	SCD 7
40	**DM040NNCN**	NH6	23.90	25.00	28.75	380	F or W *	SCD 7
51	**DM051NNC**	NH6	23.90	25.00	28.75	450	F or W *	SCD 7
63	**DM063NNC**	NH3	26.00	25.00	38.00	550	F or W *	SCD 7
75	**DM075NNC**	NH3	26.00	25.00	38.00	600	F or W *	SCD 7
93	**DM093NNC**	NH3	26.00	25.00	38.00	630	F or W *	SCD 7
118	**DM118NNC**	NH3	26.00	25.00	38.00	880	F	SCD 7
145	**DM145NNC**	NH4	32.00	29.50	41.00	930	F	SCD 7
175	**DM175NNC**	NH4	32.00	29.50	41.00	1100	F	SCD 7
220	**DM220NNC**	NH4	32.00	29.50	41.00	1450	F	SCD 9
275	**DM275NNC**	NJ1	39.50	34.00	51.50	1680	F	SCD 9
330	**DM330NNC**	NJ1	39.50	34.00	51.50	1850	F	SCD 9
440	**DM440NNC**	NJ2	48.50	38.40	59.00	2350	F	SCD 10
550	**DM550NNC**	NJ2	48.50	38.40	59.00	2800	F	SCD 10
660	**DM660NNC**	NJ3	51.50	43.40	66.00	3250	F	SCD 10

For shielded units, please replace the suffix "C" with a 'K' on the above part numbers. (i.e. DM075NNK)

*Wall mounting kit and/or drip plate kit required. Refer to pages 271 to 273 for details.

Products listed on this page are available as 'CE Mark' products. Please consult our sales office.

For termination details see page 131

For accessories see pages 271 to 274

© Hammond Power Solutions Inc.

Data subject to change without notice.

TERMINATION DETAILS

THREE PHASE, ALUMINUM AND COPPER TERMINATION - LUGS OR PADS

kVA	VOLTAGE							
	208	230	240	380	460	480	575	600
7.5	Lugs	Lugs	Lugs	Lugs	Lugs	Lugs	Lugs	Lugs
11	Lugs	Lugs	Lugs	Lugs	Lugs	Lugs	Lugs	Lugs
14	Lugs	Lugs	Lugs	Lugs	Lugs	Lugs	Lugs	Lugs
20	Lugs	Lugs	Lugs	Lugs	Lugs	Lugs	Lugs	Lugs
27	Lugs	Lugs	Lugs	Lugs	Lugs	Lugs	Lugs	Lugs
34	Lugs	Lugs	Lugs	Lugs	Lugs	Lugs	Lugs	Lugs
40	Lugs	Lugs	Lugs	Lugs	Lugs	Lugs	Lugs	Lugs
51	Lugs	Lugs	Lugs	Lugs	Lugs	Lugs	Lugs	Lugs
63	Lugs	Lugs	Lugs	Lugs	Lugs	Lugs	Lugs	Lugs
75	Lugs	Lugs	Lugs	Lugs	Lugs	Lugs	Lugs	Lugs
93	Lugs	Lugs	Lugs	Lugs	Lugs	Lugs	Lugs	Lugs
118	Diagram 1A	Diagram 1A	Diagram 1A	Lugs	Lugs	Lugs	Lugs	Lugs
145	Diagram 1A	Diagram 1A	Diagram 1A	Lugs	Lugs	Lugs	Lugs	Lugs
175	Diagram 1A	Diagram 1A	Diagram 1A	Lugs	Lugs	Lugs	Lugs	Lugs
220	Diagram 2	Diagram 1A	Diagram 1A	Diagram 1A	Diagram 1A	Lugs	Lugs	Lugs
275	Diagram 2	Diagram 2	Diagram 2	Diagram 1A	Diagram 1A	Diagram 1A	Diagram 1A	Lugs
330	Diagram 2	Diagram 2	Diagram 2	Diagram 1A	Diagram 1A	Diagram 1A	Diagram 1A	Diagram 1A
440	Diagram 3	Diagram 3	Diagram 3	Diagram 2	Diagram 1A	Diagram 1A	Diagram 1A	Diagram 1A
550	Diagram 3	Diagram 3	Diagram 3	Diagram 2	Diagram 2	Diagram 2	Diagram 1A	Diagram 1A
660	Diagram 3	Diagram 3	Diagram 3	Diagram 3	Diagram 2	Diagram 2	Diagram 2	Diagram 2

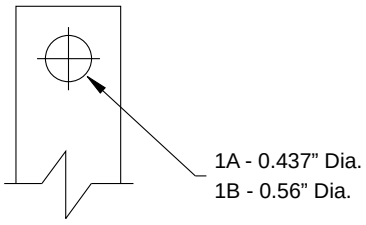

DIAGRAM 1

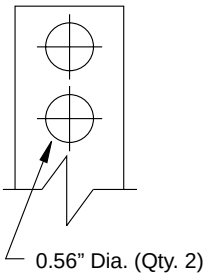

DIAGRAM 2

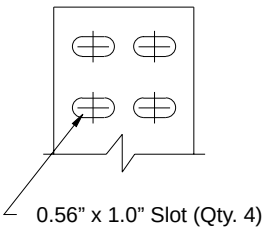

DIAGRAM 3

© Hammond Power Solutions Inc.

Data subject to change without notice.

HPS TRIBUNE
Energy Efficient (TP1/C802.2) Drive Isolation Transformers
ALUMINUM AND COPPER WOUND FEATURES

THREE PHASE SPECIFICATIONS

	7.5 to 175 kVA	220 to 660 kVA
Efficiency	Meets TP1/C802.2 efficiencies at 35% of rated load. Efficiencies are calculated under a linear load profile. Note: Energy efficient drive isolation transformers are not required by law in the U.S. Please refer to the standard drive isolation transformers on pages 121-130.	
UL Listed	File: E112313	File: E112313
CSA Certified	File: LR3902	File: LR3902
Frequency	60 Hz	60 Hz
Insulation System	220°C (150°C rise) 200°C (130°C rise) on some Copper units up to 40kVA	220°C (150°C rise) (Optional 115°C and 80°C rise available)
Enclosure Type	Heavy Duty Ventilated NEMA Type 3R Optional NEMA 4, 4X(stainless steel) and 12	Heavy Duty Ventilated NEMA Type 3R Optional NEMA 4, 4X(stainless steel) and 12
Enclosure Finish	ANSI 61 Grey, UL50	ANSI 61 Grey, UL50
Neutral	Neutral terminal for field connection (on applicable units).	Neutral terminal for field connection (on applicable units).
Standard Primary Taps	Refer to wiring diagrams for details.	Refer to wiring diagrams for details.
Termination	Front accessible separate high and low voltage terminations, suitable for copper and aluminum are provided for easy cable installation.	Front accessible separate high and low voltage terminations, suitable for copper and aluminum are provided for easy cable installation.
Thermostat	Standard on all units.	Standard on all units.
Conduit Knock-Outs	Standard on all units.	None
Impedance	Typically 3 to 6%	Typically 3 to 6%
Mounting	Floor mounting available on all units. Wall & ceiling mount available on units up to 750 lbs. Refer to selection tables for details.	Floor mounting only.
Short Circuit Withstand	Meets UL and CSA short circuit withstand requirements.	Meets UL and CSA short circuit withstand requirements.

FOR TERMINATION DETAILS SEE PAGE 142

FOR ACCESSORIES SEE PAGES 271 TO 274

© Hammond Power Solutions Inc.
Data subject to change without notice.

Selection Tables

Listed below are our standard voltages. Other primary and secondary voltages available are 240, 380 and 600.

ALUMINUM WOUND, THREE PHASE

208 Delta Primary Volts 480Y Secondary Volts 60 Hz

kVA	Catalog Number	Case Style (Pages 260 - 267)	Dimensions Width	Depth	Height	Approx. Weight (Lbs.)	Mtg Type W - Wall F - Floor	Wiring Diagram (Pages 276 - 288)
7.5	Outside of C802.2/TP1 guidelines, refer to Non-Energy Efficient Drive Isolation Transformers on page 122							
11	Outside of C802.2/TP1 guidelines, refer to Non-Energy Efficient Drive Isolation Transformers on page 122							
14	Outside of C802.2/TP1 guidelines, refer to Non-Energy Efficient Drive Isolation Transformers on page 122							
20	**DE020BK**	NH6	23.90	25.00	28.75	240	F or W *	SCD 7
27	**DE027BK**	NH6	23.90	25.00	28.75	300	F or W *	SCD 7
34	**DE034BK**	NH6	23.90	25.00	28.75	330	F or W *	SCD 7
40	**DE040BK**	NH6	23.90	25.00	28.75	350	F or W *	SCD 7
51	**DE051BK**	NH6	23.90	25.00	28.75	430	F or W *	SCD 7
63	**DE063BK**	NH3	26.00	25.00	38.00	530	F or W *	SCD 7
75	**DE075BK**	NH3	26.00	25.00	38.00	580	F or W *	SCD 7
93	**DE093BK**	NH3	26.00	25.00	38.00	630	F or W *	SCD 7
118	**DE118BK**	NH3	26.00	25.00	38.00	730	F or W *	SCD 7
145	**DE145BK**	NH4	32.00	29.50	41.00	830	F	SCD 7
175	**DE175BK**	NH4	32.00	29.50	41.00	930	F	SCD 7
220	**DE220BK**	NH4	32.00	29.50	41.00	1350	F	SCD 9
275	**DE275BK**	NJ1	39.50	34.00	51.50	1500	F	SCD 9
330	**DE330BK**	NJ1	39.50	34.00	51.50	1700	F	SCD 9
440	**DE440BK**	NJ2	48.50	38.40	59.00	2100	F	SCD 10
550	**DE550BK**	NJ2	48.50	38.40	59.00	2350	F	SCD 10
660	**DE660BK**	NJ3	51.50	43.40	66.00	2900	F	SCD 10

For shielded units, please add the suffix "S" to the above part numbers. (i.e. DE075BKS)

*WALL MOUNTING KIT AND/OR DRIP PLATE KIT REQUIRED. REFER TO PAGES 271 TO 273 FOR DETAILS.

230 Delta Primary Volts 230Y Secondary Volts 60 Hz

kVA	Catalog Number	Case Style (Pages 260 - 267)	Dimensions Width	Depth	Height	Approx. Weight (Lbs.)	Mtg Type W - Wall F - Floor	Wiring Diagram (Pages 276 - 288)
7.5	Outside of C802.2/TP1 guidelines, refer to Non-Energy Efficient Drive Isolation Transformers on page 122							
11	Outside of C802.2/TP1 guidelines, refer to Non-Energy Efficient Drive Isolation Transformers on page 122							
14	Outside of C802.2/TP1 guidelines, refer to Non-Energy Efficient Drive Isolation Transformers on page 122							
20	**DE020CC**	NH6	23.90	25.00	28.75	240	F or W *	SCD 7
27	**DE027CC**	NH6	23.90	25.00	28.75	300	F or W *	SCD 7
34	**DE034CC**	NH6	23.90	25.00	28.75	330	F or W *	SCD 7
40	**DE040CC**	NH6	23.90	25.00	28.75	350	F or W *	SCD 7
51	**DE051CC**	NH6	23.90	25.00	28.75	430	F or W *	SCD 7
63	**DE063CC**	NH3	26.00	25.00	38.00	530	F or W *	SCD 7
75	**DE075CC**	NH3	26.00	25.00	38.00	580	F or W *	SCD 7
93	**DE093CC**	NH3	26.00	25.00	38.00	630	F or W *	SCD 7
118	**DE118CC**	NH3	26.00	25.00	38.00	730	F or W *	SCD 7
145	**DE145CC**	NH4	32.00	29.50	41.00	830	F	SCD 7
175	**DE175CC**	NH4	32.00	29.50	41.00	930	F	SCD 7
220	**DE220CC**	NH4	32.00	29.50	41.00	1350	F	SCD 9
275	**DE275CC**	NJ1	39.50	34.00	51.50	1500	F	SCD 9
330	**DE330CC**	NJ1	39.50	34.00	51.50	1700	F	SCD 9
440	**DE440CC**	NJ2	48.50	38.40	59.00	2100	F	SCD 10
550	**DE550CC**	NJ2	48.50	38.40	59.00	2350	F	SCD 10
660	**DE660CC**	NJ3	51.50	43.40	66.00	2900	F	SCD 10

For shielded units, please add the suffix "S" to the above part numbers. (i.e. DE075CCS)

*WALL MOUNTING KIT AND/OR DRIP PLATE KIT REQUIRED. REFER TO PAGES 271 TO 273 FOR DETAILS.

Products listed on this page are available as 'CE Mark' products. Please consult our sales office.

FOR TERMINATION DETAILS SEE PAGE 142

FOR ACCESSORIES SEE PAGES 271 TO 274

© Hammond Power Solutions Inc.

Data subject to change without notice.

Selection Tables

Listed below are our standard voltages. Other primary and secondary voltages available are 240, 380 and 600.

ALUMINUM WOUND, THREE PHASE

460 Delta Primary Volts 230Y Secondary Volts 60 Hz

kVA	Catalog Number	Case Style (Pages 260 - 267)	Dimensions Width	Depth	Height	Approx. Weight (Lbs.)	Mtg Type W - Wall F - Floor	Wiring Diagram (Pages 276 - 288)
7.5	Outside of C802.2/TP1 guidelines, refer to Non-Energy Efficient Drive Isolation Transformers on page 123							
11	Outside of C802.2/TP1 guidelines, refer to Non-Energy Efficient Drive Isolation Transformers on page 123							
14	Outside of C802.2/TP1 guidelines, refer to Non-Energy Efficient Drive Isolation Transformers on page 123							
20	**DE020JC**	NH6	23.90	25.00	28.75	240	F or W *	SCD 7
27	**DE027JC**	NH6	23.90	25.00	28.75	300	F or W *	SCD 7
34	**DE034JC**	NH6	23.90	25.00	28.75	330	F or W *	SCD 7
40	**DE040JC**	NH6	23.90	25.00	28.75	350	F or W *	SCD 7
51	**DE051JC**	NH6	23.90	25.00	28.75	430	F or W *	SCD 7
63	**DE063JC**	NH3	26.00	25.00	38.00	530	F or W *	SCD 7
75	**DE075JC**	NH3	26.00	25.00	38.00	580	F or W *	SCD 7
93	**DE093JC**	NH3	26.00	25.00	38.00	630	F or W *	SCD 7
118	**DE118JC**	NH3	26.00	25.00	38.00	730	F or W *	SCD 7
145	**DE145JC**	NH4	32.00	29.50	41.00	830	F	SCD 7
175	**DE175JC**	NH4	32.00	29.50	41.00	930	F	SCD 7
220	**DE220JC**	NH4	32.00	29.50	41.00	1350	F	SCD 9
275	**DE275JC**	NJ1	39.50	34.00	51.50	1500	F	SCD 9
330	**DE330JC**	NJ1	39.50	34.00	51.50	1700	F	SCD 9
440	**DE440JC**	NJ2	48.50	38.40	59.00	2100	F	SCD 10
550	**DE550JC**	NJ2	48.50	38.40	59.00	2350	F	SCD 10
660	**DE660JC**	NJ3	51.50	43.40	66.00	2900	F	SCD 10

For shielded units, please add the suffix "S" to the above part numbers. (i.e. DE075JCS)

*Wall mounting kit and/or drip plate kit required. Refer to pages 271 to 273 for details.

460 Delta Primary Volts 400Y Secondary Volts 60 Hz

kVA	Catalog Number	Case Style (Pages 260 - 267)	Dimensions Width	Depth	Height	Approx. Weight (Lbs.)	Mtg Type W - Wall F - Floor	Wiring Diagram (Pages 276 - 288)
7.5	Outside of C802.2/TP1 guidelines, refer to Non-Energy Efficient Drive Isolation Transformers on page 123							
11	Outside of C802.2/TP1 guidelines, refer to Non-Energy Efficient Drive Isolation Transformers on page 123							
14	Outside of C802.2/TP1 guidelines, refer to Non-Energy Efficient Drive Isolation Transformers on page 123							
20	**DE020JH**	NH6	23.90	25.00	28.75	240	F or W *	SCD 7
27	**DE027JH**	NH6	23.90	25.00	28.75	300	F or W *	SCD 7
34	**DE034JH**	NH6	23.90	25.00	28.75	330	F or W *	SCD 7
40	**DE040JH**	NH6	23.90	25.00	28.75	350	F or W *	SCD 7
51	**DE051JH**	NH6	23.90	25.00	28.75	430	F or W *	SCD 7
63	**DE063JH**	NH3	26.00	25.00	38.00	530	F or W *	SCD 7
75	**DE075JH**	NH3	26.00	25.00	38.00	580	F or W *	SCD 7
93	**DE093JH**	NH3	26.00	25.00	38.00	630	F or W *	SCD 7
118	**DE118JH**	NH3	26.00	25.00	38.00	730	F or W *	SCD 7
145	**DE145JH**	NH4	32.00	29.50	41.00	830	F	SCD 7
175	**DE175JH**	NH4	32.00	29.50	41.00	930	F	SCD 7
220	**DE220JH**	NH4	32.00	29.50	41.00	1350	F	SCD 9
275	**DE275JH**	NJ1	39.50	34.00	51.50	1500	F	SCD 9
330	**DE330JH**	NJ1	39.50	34.00	51.50	1700	F	SCD 9
440	**DE440JH**	NJ2	48.50	38.40	59.00	2100	F	SCD 10
550	**DE550JH**	NJ2	48.50	38.40	59.00	2350	F	SCD 10
660	**DE660JH**	NJ3	51.50	43.40	66.00	2900	F	SCD 10

For shielded units, please add the suffix "S" to the above part numbers. (i.e. DE075JHS)

*Wall mounting kit and/or drip plate kit required. Refer to pages 271 to 273 for details.

Products listed on this page are available as 'CE Mark' products. Please consult our sales office.

For termination details see page 142

For accessories see pages 271 to 274

© Hammond Power Solutions Inc.

Data subject to change without notice.

Selection Tables

Listed below are our standard voltages. Other primary and secondary voltages available are 240, 380 and 600.

ALUMINUM WOUND, THREE PHASE

460 Delta Primary Volts 460Y Secondary Volts 60 Hz

kVA	Catalog Number	Case Style (Pages 260 - 267)	Dimensions Width	Depth	Height	Approx. Weight (Lbs.)	Mtg Type W - Wall F - Floor	Wiring Diagram (Pages 276 - 288)
7.5	Outside of C802.2/TP1 guidelines, refer to Non-Energy Efficient Drive Isolation Transformers on page 124							
11	Outside of C802.2/TP1 guidelines, refer to Non-Energy Efficient Drive Isolation Transformers on page 124							
14	Outside of C802.2/TP1 guidelines, refer to Non-Energy Efficient Drive Isolation Transformers on page 124							
20	**DE020JJ**	NH6	23.90	25.00	28.75	240	F or W *	SCD 7
27	**DE027JJ**	NH6	23.90	25.00	28.75	300	F or W *	SCD 7
34	**DE034JJ**	NH6	23.90	25.00	28.75	330	F or W *	SCD 7
40	**DE040JJ**	NH6	23.90	25.00	28.75	350	F or W *	SCD 7
51	**DE051JJ**	NH6	23.90	25.00	28.75	430	F or W *	SCD 7
63	**DE063JJ**	NH3	26.00	25.00	38.00	530	F or W *	SCD 7
75	**DE075JJ**	NH3	26.00	25.00	38.00	580	F or W *	SCD 7
93	**DE093JJ**	NH3	26.00	25.00	38.00	630	F or W *	SCD 7
118	**DE118JJ**	NH3	26.00	25.00	38.00	730	F or W *	SCD 7
145	**DE145JJ**	NH4	32.00	29.50	41.00	830	F	SCD 7
175	**DE175JJ**	NH4	32.00	29.50	41.00	930	F	SCD 7
220	**DE220JJ**	NH4	32.00	29.50	41.00	1350	F	SCD 9
275	**DE275JJ**	NJ1	39.50	34.00	51.50	1500	F	SCD 9
330	**DE330JJ**	NJ1	39.50	34.00	51.50	1700	F	SCD 9
440	**DE440JJ**	NJ2	48.50	38.40	59.00	2100	F	SCD 10
550	**DE550JJ**	NJ2	48.50	38.40	59.00	2350	F	SCD 10
660	**DE660JJ**	NJ3	51.50	43.40	66.00	2900	F	SCD 10

For shielded units, please add the suffix "S" to the above part numbers. (i.e. DE075JJS)

*Wall mounting kit and/or drip plate kit required.
Refer to pages 271 to 273 for details.

480 Delta Primary Volts 240Y Secondary Volts 60 Hz

kVA	Catalog Number	Case Style (Pages 260 - 267)	Dimensions Width	Depth	Height	Approx. Weight (Lbs.)	Mtg Type W - Wall F - Floor	Wiring Diagram (Pages 276 - 288)
7.5	Outside of C802.2/TP1 guidelines, refer to Non-Energy Efficient Drive Isolation Transformers on page 124							
11	Outside of C802.2/TP1 guidelines, refer to Non-Energy Efficient Drive Isolation Transformers on page 124							
14	Outside of C802.2/TP1 guidelines, refer to Non-Energy Efficient Drive Isolation Transformers on page 124							
20	**DE020KD**	NH6	23.90	25.00	28.75	240	F or W *	SCD 7
27	**DE027KD**	NH6	23.90	25.00	28.75	300	F or W *	SCD 7
34	**DE034KD**	NH6	23.90	25.00	28.75	330	F or W *	SCD 7
40	**DE040KD**	NH6	23.90	25.00	28.75	350	F or W *	SCD 7
51	**DE051KD**	NH6	23.90	25.00	28.75	430	F or W *	SCD 7
63	**DE063KD**	NH3	26.00	25.00	38.00	530	F or W *	SCD 7
75	**DE075KD**	NH3	26.00	25.00	38.00	580	F or W *	SCD 7
93	**DE093KD**	NH3	26.00	25.00	38.00	630	F or W *	SCD 7
118	**DE118KD**	NH3	26.00	25.00	38.00	730	F or W *	SCD 7
145	**DE145KD**	NH4	32.00	29.50	41.00	830	F	SCD 7
175	**DE175KD**	NH4	32.00	29.50	41.00	930	F	SCD 7
220	**DE220KD**	NH4	32.00	29.50	41.00	1350	F	SCD 9
275	**DE275KD**	NJ1	39.50	34.00	51.50	1500	F	SCD 9
330	**DE330KD**	NJ1	39.50	34.00	51.50	1700	F	SCD 9
440	**DE440KD**	NJ2	48.50	38.40	59.00	2100	F	SCD 10
550	**DE550KD**	NJ2	48.50	38.40	59.00	2350	F	SCD 10
660	**DE660KD**	NJ3	51.50	43.40	66.00	2900	F	SCD 10

For shielded units, please add the suffix "S" to the above part numbers. (i.e. DE075KDS)

*Wall mounting kit and/or drip plate kit required.
Refer to pages 271 to 273 for details.

Products listed on this page are available as 'CE Mark' products. Please consult our sales office.

For termination details see page 142

For accessories see pages 271 to 274

© Hammond Power Solutions Inc.

Data subject to change without notice.

Selection Tables

Listed below are our standard voltages. Other primary and secondary voltages available are 240, 380 and 600.

ALUMINUM WOUND, THREE PHASE

480 Delta Primary Volts 480Y Secondary Volts 60 Hz

kVA	Catalog Number	Case Style (Pages 260 - 267)	Dimensions Width	Depth	Height	Approx. Weight (Lbs.)	Mtg Type W - Wall F - Floor	Wiring Diagram (Pages 276 - 288)
7.5	Outside of C802.2/TP1 guidelines, refer to Non-Energy Efficient Drive Isolation Transformers on page 125							
11	Outside of C802.2/TP1 guidelines, refer to Non-Energy Efficient Drive Isolation Transformers on page 125							
14	Outside of C802.2/TP1 guidelines, refer to Non-Energy Efficient Drive Isolation Transformers on page 125							
20	**DE020KK**	NH6	23.90	25.00	28.75	240	F or W *	SCD 7
27	**DE027KK**	NH6	23.90	25.00	28.75	300	F or W *	SCD 7
34	**DE034KK**	NH6	23.90	25.00	28.75	330	F or W *	SCD 7
40	**DE040KK**	NH6	23.90	25.00	28.75	350	F or W *	SCD 7
51	**DE051KK**	NH6	23.90	25.00	28.75	430	F or W *	SCD 7
63	**DE063KK**	NH3	26.00	25.00	38.00	530	F or W *	SCD 7
75	**DE075KK**	NH3	26.00	25.00	38.00	580	F or W *	SCD 7
93	**DE093KK**	NH3	26.00	25.00	38.00	630	F or W *	SCD 7
118	**DE118KK**	NH3	26.00	25.00	38.00	730	F or W *	SCD 7
145	**DE145KK**	NH4	32.00	29.50	41.00	830	F	SCD 7
175	**DE175KK**	NH4	32.00	29.50	41.00	930	F	SCD 7
220	**DE220KK**	NH4	32.00	29.50	41.00	1350	F	SCD 9
275	**DE275KK**	NJ1	39.50	34.00	51.50	1500	F	SCD 9
330	**DE330KK**	NJ1	39.50	34.00	51.50	1700	F	SCD 9
440	**DE440KK**	NJ2	48.50	38.40	59.00	2100	F	SCD 10
550	**DE550KK**	NJ2	48.50	38.40	59.00	2350	F	SCD 10
660	**DE660KK**	NJ3	51.50	43.40	66.00	2900	F	SCD 10

For shielded units, please add the suffix "S" to the above part numbers. (i.e. DE075KKS)

*WALL MOUNTING KIT AND/OR DRIP PLATE KIT REQUIRED. REFER TO PAGES 271 TO 273 FOR DETAILS.

575 Delta Primary Volts 460Y Secondary Volts 60 Hz

kVA	Catalog Number	Case Style (Pages 260 - 267)	Dimensions Width	Depth	Height	Approx. Weight (Lbs.)	Mtg Type W - Wall F - Floor	Wiring Diagram (Pages 276 - 288)
7.5	Outside of C802.2/TP1 guidelines, refer to Non-Energy Efficient Drive Isolation Transformers on page 125							
11	Outside of C802.2/TP1 guidelines, refer to Non-Energy Efficient Drive Isolation Transformers on page 125							
14	Outside of C802.2/TP1 guidelines, refer to Non-Energy Efficient Drive Isolation Transformers on page 125							
20	**DE020NJ**	NH6	23.90	25.00	28.75	300	F or W *	SCD 7
27	**DE027NJ**	NH6	23.90	25.00	28.75	300	F or W *	SCD 7
34	**DE034NJ**	NH6	23.90	25.00	28.75	360	F or W *	SCD 7
40	**DE040NJ**	NH6	23.90	25.00	28.75	390	F or W *	SCD 7
51	**DE051NJ**	NH6	23.90	25.00	28.75	410	F or W *	SCD 7
63	**DE063NJ**	NH3	26.00	25.00	38.00	560	F or W *	SCD 7
75	**DE075NJ**	NH3	26.00	25.00	38.00	600	F or W *	SCD 7
93	**DE093NJ**	NH3	26.00	25.00	38.00	780	F or W *	SCD 7
118	**DE118NJ**	NH3	26.00	25.00	38.00	880	F or W *	SCD 7
145	**DE145NJ**	NH4	32.00	29.50	41.00	1050	F	SCD 7
175	**DE175NJ**	NH4	32.00	29.50	41.00	1200	F	SCD 7
220	**DE220NJ**	NJ1	39.50	34.00	51.50	1650	F	SCD 9
275	**DE275NJ**	NJ1	39.50	34.00	51.50	1900	F	SCD 9
330	**DE330NJ**	NJ1	39.50	34.00	51.50	2000	F	SCD 9
440	**DE440NJ**	NJ2	48.50	38.40	59.00	3000	F	SCD 10
550	**DE550NJ**	NJ2	48.50	38.40	59.00	3000	F	SCD 10
660	**DE660NJ**	NJ3	51.50	43.40	66.00	2900	F	SCD 10

For shielded units, please add the suffix "S" to the above part numbers. (i.e. DE075NJS)

*WALL MOUNTING KIT AND/OR DRIP PLATE KIT REQUIRED. REFER TO PAGES 271 TO 273 FOR DETAILS.

Products listed on this page are available as 'CE Mark' products. Please consult our sales office.

© Hammond Power Solutions Inc.

Data subject to change without notice.

Selection Tables

Listed below are our standard voltages. Other primary and secondary voltages available are 240, 380 and 600.

ALUMINUM WOUND, THREE PHASE

575 Delta Primary Volts **575Y Secondary Volts** **60 Hz**

kVA	Catalog Number	Case Style (Pages 260 - 267)	Dimensions Width	Depth	Height	Approx. Weight (Lbs.)	Mtg Type W - Wall F - Floor	Wiring Diagram (Pages 276 - 288)
7.5	Outside of C802.2/TP1 guidelines, refer to Non-Energy Efficient Drive Isolation Transformers on page 126							
11	Outside of C802.2/TP1 guidelines, refer to Non-Energy Efficient Drive Isolation Transformers on page 126							
14	Outside of C802.2/TP1 guidelines, refer to Non-Energy Efficient Drive Isolation Transformers on page 126							
20	**DE020NN**	NH6	23.90	25.00	28.75	240	F or W *	SCD 7
27	**DE027NN**	NH6	23.90	25.00	28.75	300	F or W *	SCD 7
34	**DE034NN**	NH6	23.90	25.00	28.75	330	F or W *	SCD 7
40	**DE040NN**	NH6	23.90	25.00	28.75	350	F or W *	SCD 7
51	**DE051NN**	NH6	23.90	25.00	28.75	430	F or W *	SCD 7
63	**DE063NN**	NH3	26.00	25.00	38.00	530	F or W *	SCD 7
75	**DE075NN**	NH3	26.00	25.00	38.00	580	F or W *	SCD 7
93	**DE093NN**	NH3	26.00	25.00	38.00	630	F or W *	SCD 7
118	**DE118NN**	NH3	26.00	25.00	38.00	730	F or W *	SCD 7
145	**DE145NN**	NH4	32.00	29.50	41.00	830	F	SCD 7
175	**DE175NN**	NH4	32.00	29.50	41.00	930	F	SCD 7
220	**DE220NN**	NH4	32.00	29.50	41.00	1350	F	SCD 9
275	**DE275NN**	NJ1	39.50	34.00	51.50	1500	F	SCD 9
330	**DE330NN**	NJ1	39.50	34.00	51.50	1700	F	SCD 9
440	**DE440NN**	NJ2	48.50	38.40	59.00	2100	F	SCD 10
550	**DE550NN**	NJ2	48.50	38.40	59.00	2350	F	SCD 10
660	**DE660NN**	NJ3	51.50	43.40	66.00	2900	F	SCD 10

For shielded units, please add the suffix "S" to the above part numbers. (i.e. DE075NNS)

*Wall mounting kit and/or drip plate kit required. Refer to pages 271 to 273 for details.

COPPER WOUND, THREE PHASE

208 Delta Primary Volts **480Y Secondary Volts** **60 Hz**

kVA	Catalog Number	Case Style (Pages 260 - 267)	Dimensions Width	Depth	Height	Approx. Weight (Lbs.)	Mtg Type W - Wall F - Floor	Wiring Diagram (Pages 276 - 288)
7.5	Outside of C802.2/TP1 guidelines, refer to Non-Energy Efficient Drive Isolation Transformers on page 126							
11	Outside of C802.2/TP1 guidelines, refer to Non-Energy Efficient Drive Isolation Transformers on page 126							
14	Outside of C802.2/TP1 guidelines, refer to Non-Energy Efficient Drive Isolation Transformers on page 126							
20	**DE020BKC**	NH6	23.90	25.00	28.75	270	F or W *	SCD 7
27	**DE027BKC**	NH6	23.90	25.00	28.75	330	F or W *	SCD 7
34	**DE034BKC**	NH6	23.90	25.00	28.75	350	F or W *	SCD 7
40	**DE040BKC**	NH6	23.90	25.00	28.75	380	F or W *	SCD 7
51	**DE051BKC**	NH6	23.90	25.00	28.75	450	F or W *	SCD 7
63	**DE063BKC**	NH3	26.00	25.00	38.00	550	F or W *	SCD 7
75	**DE075BKC**	NH3	26.00	25.00	38.00	600	F or W *	SCD 7
93	**DE093BKC**	NH3	26.00	25.00	38.00	630	F or W *	SCD 7
118	**DE118BKC**	NH3	26.00	25.00	38.00	880	F	SCD 7
145	**DE145BKC**	NH4	32.00	29.50	41.00	930	F	SCD 7
175	**DE175BKC**	NH4	32.00	29.50	41.00	1100	F	SCD 7
220	**DE220BKC**	NH4	32.00	29.50	41.00	1450	F	SCD 9
275	**DE275BKC**	NJ1	39.50	34.00	51.50	1680	F	SCD 9
330	**DE330BKC**	NJ1	39.50	34.00	51.50	1850	F	SCD 9
440	**DE440BKC**	NJ2	48.50	38.40	59.00	2350	F	SCD 10
550	**DE550BKC**	NJ2	48.50	38.40	59.00	2800	F	SCD 10
660	**DE660BKC**	NJ3	51.50	43.40	66.00	3250	F	SCD 10

For shielded units, please replace the suffix "C" with a 'K' on the above part numbers. (i.e. DE075BKK)

*Wall mounting kit and/or drip plate kit required. Refer to pages 271 to 273 for details.

Products listed on this page are available as 'CE Mark' products. Please consult our sales office.

For termination details see page 142

For accessories see pages 271 to 274

© Hammond Power Solutions Inc.

Data subject to change without notice.

Selection Tables

Listed below are our standard voltages. Other primary and secondary voltages available are 240, 380 and 600.

COPPER WOUND, THREE PHASE

230 Delta Primary Volts 230Y Secondary Volts 60 Hz

kVA	Catalog Number	Case Style (Pages 260 - 267)	Dimensions Width	Depth	Height	Approx. Weight (Lbs.)	Mtg Type W - Wall F - Floor	Wiring Diagram (Pages 276 - 288)
7.5	Outside of C802.2/TP1 guidelines, refer to Non-Energy Efficient Drive Isolation Transformers on page 127							
11	Outside of C802.2/TP1 guidelines, refer to Non-Energy Efficient Drive Isolation Transformers on page 127							
14	Outside of C802.2/TP1 guidelines, refer to Non-Energy Efficient Drive Isolation Transformers on page 127							
20	**DE020CCC**	NH6	23.90	25.00	28.75	270	F or W *	SCD 7
27	**DE027CCC**	NH6	23.90	25.00	28.75	330	F or W *	SCD 7
34	**DE034CCC**	NH6	23.90	25.00	28.75	350	F or W *	SCD 7
40	**DE040CCC**	NH6	23.90	25.00	28.75	380	F or W *	SCD 7
51	**DE051CCC**	NH6	23.90	25.00	28.75	450	F or W *	SCD 7
63	**DE063CCC**	NH3	26.00	25.00	38.00	550	F or W *	SCD 7
75	**DE075CCC**	NH3	26.00	25.00	38.00	600	F or W *	SCD 7
93	**DE093CCC**	NH3	26.00	25.00	38.00	630	F or W *	SCD 7
118	**DE118CCC**	NH3	26.00	25.00	38.00	880	F	SCD 7
145	**DE145CCC**	NH4	32.00	29.50	41.00	930	F	SCD 7
175	**DE175CCC**	NH4	32.00	29.50	41.00	1100	F	SCD 7
220	**DE220CCC**	NH4	32.00	29.50	41.00	1450	F	SCD 9
275	**DE275CCC**	NJ1	39.50	34.00	51.50	1680	F	SCD 9
330	**DE330CCC**	NJ1	39.50	34.00	51.50	1850	F	SCD 9
440	**DE440CCC**	NJ2	48.50	38.40	59.00	2350	F	SCD 10
550	**DE550CCC**	NJ2	48.50	38.40	59.00	2800	F	SCD 10
660	**DE660CCC**	NJ3	51.50	43.40	66.00	3250	F	SCD 10

For shielded units, please replace the suffix "C" with a 'K' on the above part numbers. (i.e. DE075CCK)

*Wall mounting kit and/or drip plate kit required. Refer to pages 271 to 273 for details.

460 Delta Primary Volts 230Y Secondary Volts 60 Hz

kVA	Catalog Number	Case Style (Pages 260 - 267)	Dimensions Width	Depth	Height	Approx. Weight (Lbs.)	Mtg Type W - Wall F - Floor	Wiring Diagram (Pages 276 - 288)
7.5	Outside of C802.2/TP1 guidelines, refer to Non-Energy Efficient Drive Isolation Transformers on page 127							
11	Outside of C802.2/TP1 guidelines, refer to Non-Energy Efficient Drive Isolation Transformers on page 127							
14	Outside of C802.2/TP1 guidelines, refer to Non-Energy Efficient Drive Isolation Transformers on page 127							
20	**DE020JCCN**	NH6	23.90	25.00	28.75	270	F or W *	SCD 7
27	**DE027JCCN**	NH6	23.90	25.00	28.75	330	F or W *	SCD 7
34	**DE034JCC**	NH6	23.90	25.00	28.75	350	F or W *	SCD 7
40	**DE040JCC**	NH6	23.90	25.00	28.75	380	F or W *	SCD 7
51	**DE051JCC**	NH6	23.90	25.00	28.75	450	F or W *	SCD 7
63	**DE063JCC**	NH3	26.00	25.00	38.00	550	F or W *	SCD 7
75	**DE075JCC**	NH3	26.00	25.00	38.00	600	F or W *	SCD 7
93	**DE093JCC**	NH3	26.00	25.00	38.00	630	F or W *	SCD 7
118	**DE118JCC**	NH3	26.00	25.00	38.00	880	F	SCD 7
145	**DE145JCC**	NH4	32.00	29.50	41.00	930	F	SCD 7
175	**DE175JCC**	NH4	32.00	29.50	41.00	1100	F	SCD 7
220	**DE220JCC**	NH4	32.00	29.50	41.00	1450	F	SCD 9
275	**DE275JCC**	NJ1	39.50	34.00	51.50	1680	F	SCD 9
330	**DE330JCC**	NJ1	39.50	34.00	51.50	1850	F	SCD 9
440	**DE440JCC**	NJ2	48.50	38.40	59.00	2350	F	SCD 10
550	**DE550JCC**	NJ2	48.50	38.40	59.00	2800	F	SCD 10
660	**DE660JCC**	NJ3	51.50	43.40	66.00	3250	F	SCD 10

For shielded units, please replace the suffix "C" with a 'K' on the above part numbers. (i.e. DE075JCK)

*Wall mounting kit and/or drip plate kit required. Refer to pages 271 to 273 for details.

Products listed on this page are available as 'CE Mark' products. Please consult our sales office.

For termination details see page 142

For accessories see pages 271 to 274

© Hammond Power Solutions Inc.

Data subject to change without notice.

Selection Tables

Listed below are our standard voltages. Other primary and secondary voltages available are 240, 380 and 600.

COPPER WOUND, THREE PHASE

460 Delta Primary Volts 400Y Secondary Volts 60 Hz

kVA	Catalog Number	Case Style (Pages 260 - 267)	Dimensions Width	Depth	Height	Approx. Weight (Lbs.)	Mtg Type W - Wall F - Floor	Wiring Diagram (Pages 276 - 288)
7.5	Outside of C802.2/TP1 guidelines, refer to Non-Energy Efficient Drive Isolation Transformers on page 128							
11	Outside of C802.2/TP1 guidelines, refer to Non-Energy Efficient Drive Isolation Transformers on page 128							
14	Outside of C802.2/TP1 guidelines, refer to Non-Energy Efficient Drive Isolation Transformers on page 128							
20	**DE020JHCN**	NH6	23.90	25.00	28.75	270	F or W *	SCD 7
27	**DE027JHCN**	NH6	23.90	25.00	28.75	330	F or W *	SCD 7
34	**DE034JHC**	NH6	23.90	25.00	28.75	350	F or W *	SCD 7
40	**DE040JHC**	NH6	23.90	25.00	28.75	380	F or W *	SCD 7
51	**DE051JHC**	NH6	23.90	25.00	28.75	450	F or W *	SCD 7
63	**DE063JHC**	NH3	26.00	25.00	38.00	550	F or W *	SCD 7
75	**DE075JHC**	NH3	26.00	25.00	38.00	600	F or W *	SCD 7
93	**DE093JHC**	NH3	26.00	25.00	38.00	630	F or W *	SCD 7
118	**DE118JHC**	NH3	26.00	25.00	38.00	880	F	SCD 7
145	**DE145JHC**	NH4	32.00	29.50	41.00	930	F	SCD 7
175	**DE175JHC**	NH4	32.00	29.50	41.00	1100	F	SCD 7
220	**DE220JHC**	NH4	32.00	29.50	41.00	1450	F	SCD 9
275	**DE275JHC**	NJ1	39.50	34.00	51.50	1680	F	SCD 9
330	**DE330JHC**	NJ1	39.50	34.00	51.50	1850	F	SCD 9
440	**DE440JHC**	NJ2	48.50	38.40	59.00	2350	F	SCD 10
550	**DE550JHC**	NJ2	48.50	38.40	59.00	2800	F	SCD 10
660	**DE660JHC**	NJ3	51.50	43.40	66.00	3250	F	SCD 10

For shielded units, please replace the suffix "C" with a 'K' on the above part numbers. (i.e. DE075JHK)

*WALL MOUNTING KIT AND/OR DRIP PLATE KIT REQUIRED. REFER TO PAGES 271 TO 273 FOR DETAILS.

460 Delta Primary Volts 460Y Secondary Volts 60 Hz

kVA	Catalog Number	Case Style (Pages 260 - 267)	Dimensions Width	Depth	Height	Approx. Weight (Lbs.)	Mtg Type W - Wall F - Floor	Wiring Diagram (Pages 276 - 288)
7.5	Outside of C802.2/TP1 guidelines, refer to Non-Energy Efficient Drive Isolation Transformers on page 128							
11	Outside of C802.2/TP1 guidelines, refer to Non-Energy Efficient Drive Isolation Transformers on page 128							
14	Outside of C802.2/TP1 guidelines, refer to Non-Energy Efficient Drive Isolation Transformers on page 128							
20	**DE020JJCN**	NH6	23.90	25.00	28.75	270	F or W *	SCD 7
27	**DE027JJCN**	NH6	23.90	25.00	28.75	330	F or W *	SCD 7
34	**DE034JJC**	NH6	23.90	25.00	28.75	350	F or W *	SCD 7
40	**DE040JJC**	NH6	23.90	25.00	28.75	380	F or W *	SCD 7
51	**DE051JJC**	NH6	23.90	25.00	28.75	450	F or W *	SCD 7
63	**DE063JJC**	NH3	26.00	25.00	38.00	550	F or W *	SCD 7
75	**DE075JJC**	NH3	26.00	25.00	38.00	600	F or W *	SCD 7
93	**DE093JJC**	NH3	26.00	25.00	38.00	630	F or W *	SCD 7
118	**DE118JJC**	NH3	26.00	25.00	38.00	880	F	SCD 7
145	**DE145JJC**	NH4	32.00	29.50	41.00	930	F	SCD 7
175	**DE175JJC**	NH4	32.00	29.50	41.00	1100	F	SCD 7
220	**DE220JJC**	NH4	32.00	29.50	41.00	1450	F	SCD 9
275	**DE275JJC**	NJ1	39.50	34.00	51.50	1680	F	SCD 9
330	**DE330JJC**	NJ1	39.50	34.00	51.50	1850	F	SCD 9
440	**DE440JJC**	NJ2	48.50	38.40	59.00	2350	F	SCD 10
550	**DE550JJC**	NJ2	48.50	38.40	59.00	2800	F	SCD 10
660	**DE660JJC**	NJ3	51.50	43.40	66.00	3250	F	SCD 10

For shielded units, please replace the suffix "C" with a 'K' on the above part numbers. (i.e. DE075JJK)

*WALL MOUNTING KIT AND/OR DRIP PLATE KIT REQUIRED. REFER TO PAGES 271 TO 273 FOR DETAILS.

Products listed on this page are available as 'CE Mark' products. Please consult our sales office.

© Hammond Power Solutions Inc.

Data subject to change without notice.

Selection Tables

Listed below are our standard voltages. Other primary and secondary voltages available are 240, 380 and 600.

COPPER WOUND, THREE PHASE

480 Delta Primary Volts 240Y Secondary Volts 60 Hz

kVA	Catalog Number	Case Style (Pages 260 - 267)	Dimensions Width	Depth	Height	Approx. Weight (Lbs.)	Mtg Type W - Wall F - Floor	Wiring Diagram (Pages 276 - 288)
7.5	Outside of C802.2/TP1 guidelines, refer to Non-Energy Efficient Drive Isolation Transformers on page 129							
11	Outside of C802.2/TP1 guidelines, refer to Non-Energy Efficient Drive Isolation Transformers on page 129							
14	Outside of C802.2/TP1 guidelines, refer to Non-Energy Efficient Drive Isolation Transformers on page 129							
20	**DE020KDCN**	NH6	23.90	25.00	28.75	270	F or W *	SCD 7
27	**DE027KDCN**	NH6	23.90	25.00	28.75	330	F or W *	SCD 7
34	**DE034KDCN**	NH6	23.90	25.00	28.75	350	F or W *	SCD 7
40	**DE040KDC**	NH6	23.90	25.00	28.75	380	F or W *	SCD 7
51	**DE051KDC**	NH6	23.90	25.00	28.75	450	F or W *	SCD 7
63	**DE063KDC**	NH3	26.00	25.00	38.00	550	F or W *	SCD 7
75	**DE075KDC**	NH3	26.00	25.00	38.00	600	F or W *	SCD 7
93	**DE093KDC**	NH3	26.00	25.00	38.00	630	F or W *	SCD 7
118	**DE118KDC**	NH3	26.00	25.00	38.00	880	F	SCD 7
145	**DE145KDC**	NH4	32.00	29.50	41.00	930	F	SCD 7
175	**DE175KDC**	NH4	32.00	29.50	41.00	1100	F	SCD 7
220	**DE220KDC**	NH4	32.00	29.50	41.00	1450	F	SCD 9
275	**DE275KDC**	NJ1	39.50	34.00	51.50	1680	F	SCD 9
330	**DE330KDC**	NJ1	39.50	34.00	51.50	1850	F	SCD 9
440	**DE440KDC**	NJ2	48.50	38.40	59.00	2350	F	SCD 10
550	**DE550KDC**	NJ2	48.50	38.40	59.00	2800	F	SCD 10
660	**DE660KDC**	NJ3	51.50	43.40	66.00	3250	F	SCD 10

For shielded units, please replace the suffix "C" with a 'K' on the above part numbers. (i.e. DE075KDK)

*WALL MOUNTING KIT AND/OR DRIP PLATE KIT REQUIRED. REFER TO PAGES 271 TO 273 FOR DETAILS.

480 Delta Primary Volts 480Y Secondary Volts 60 Hz

kVA	Catalog Number	Case Style (Pages 260 - 267)	Dimensions Width	Depth	Height	Approx. Weight (Lbs.)	Mtg Type W - Wall F - Floor	Wiring Diagram (Pages 276 - 288)
7.5	Outside of C802.2/TP1 guidelines, refer to Non-Energy Efficient Drive Isolation Transformers on page 129							
11	Outside of C802.2/TP1 guidelines, refer to Non-Energy Efficient Drive Isolation Transformers on page 129							
14	Outside of C802.2/TP1 guidelines, refer to Non-Energy Efficient Drive Isolation Transformers on page 129							
20	**DE020KKCN**	NH6	23.90	25.00	28.75	270	F or W *	SCD 7
27	**DE027KKCN**	NH6	23.90	25.00	28.75	330	F or W *	SCD 7
34	**DE034KKCN**	NH6	23.90	25.00	28.75	350	F or W *	SCD 7
40	**DE040KKC**	NH6	23.90	25.00	28.75	380	F or W *	SCD 7
51	**DE051KKC**	NH6	23.90	25.00	28.75	450	F or W *	SCD 7
63	**DE063KKC**	NH3	26.00	25.00	38.00	550	F or W *	SCD 7
75	**DE075KKC**	NH3	26.00	25.00	38.00	600	F or W *	SCD 7
93	**DE093KKC**	NH3	26.00	25.00	38.00	630	F or W *	SCD 7
118	**DE118KKC**	NH3	26.00	25.00	38.00	880	F	SCD 7
145	**DE145KKC**	NH4	32.00	29.50	41.00	930	F	SCD 7
175	**DE175KKC**	NH4	32.00	29.50	41.00	1100	F	SCD 7
220	**DE220KKC**	NH4	32.00	29.50	41.00	1450	F	SCD 9
275	**DE275KKC**	NJ1	39.50	34.00	51.50	1680	F	SCD 9
330	**DE330KKC**	NJ1	39.50	34.00	51.50	1850	F	SCD 9
440	**DE440KKC**	NJ2	48.50	38.40	59.00	2350	F	SCD 10
550	**DE550KKC**	NJ2	48.50	38.40	59.00	2800	F	SCD 10
660	**DE660KKC**	NJ3	51.50	43.40	66.00	3250	F	SCD 10

For shielded units, please replace the suffix "C" with a 'K' on the above part numbers. (i.e. DE075KKK)

*WALL MOUNTING KIT AND/OR DRIP PLATE KIT REQUIRED. REFER TO PAGES 271 TO 273 FOR DETAILS.

© Hammond Power Solutions Inc.
Data subject to change without notice.

Selection Tables

Listed below are our standard voltages. Other primary and secondary voltages available are 240, 380 and 600.

COPPER WOUND, THREE PHASE

575 Delta Primary Volts 460Y Secondary Volts 60 Hz

kVA	Catalog Number	Case Style (Pages 260 - 267)	Dimensions Width	Depth	Height	Approx. Weight (Lbs.)	Mtg Type W - Wall F - Floor	Wiring Diagram (Pages 276 - 288)
7.5	Outside of C802.2/TP1 guidelines, refer to Non-Energy Efficient Drive Isolation Transformers on page 130							
11	Outside of C802.2/TP1 guidelines, refer to Non-Energy Efficient Drive Isolation Transformers on page 130							
14	Outside of C802.2/TP1 guidelines, refer to Non-Energy Efficient Drive Isolation Transformers on page 130							
20	**DE020NJCN**	NH6	23.90	25.00	28.75	270	F or W *	SCD 7
27	**DE027NJCN**	NH6	23.90	25.00	28.75	330	F or W *	SCD 7
34	**DE034NJCN**	NH6	23.90	25.00	28.75	350	F or W *	SCD 7
40	**DE040NJCN**	NH6	23.90	25.00	28.75	380	F or W *	SCD 7
51	**DE051NJC**	NH6	23.90	25.00	28.75	450	F or W *	SCD 7
63	**DE063NJC**	NH3	26.00	25.00	38.00	550	F or W *	SCD 7
75	**DE075NJC**	NH3	26.00	25.00	38.00	600	F or W *	SCD 7
93	**DE093NJC**	NH3	26.00	25.00	38.00	630	F or W *	SCD 7
118	**DE118NJC**	NH3	26.00	25.00	38.00	880	F	SCD 7
145	**DE145NJC**	NH4	32.00	29.50	41.00	930	F	SCD 7
175	**DE175NJC**	NH4	32.00	29.50	41.00	1100	F	SCD 7
220	**DE220NJC**	NH4	32.00	29.50	41.00	1450	F	SCD 9
275	**DE275NJC**	NJ1	39.50	34.00	51.50	1680	F	SCD 9
330	**DE330NJC**	NJ1	39.50	34.00	51.50	1850	F	SCD 9
440	**DE440NJC**	NJ2	48.50	38.40	59.00	2350	F	SCD 10
550	**DE550NJC**	NJ2	48.50	38.40	59.00	2800	F	SCD 10
660	**DE660NJC**	NJ3	51.50	43.40	66.00	3250	F	SCD 10

For shielded units, please replace the suffix "C" with a 'K' on the above part numbers. (i.e. DE075NJK)

*Wall mounting kit and/or drip plate kit required. Refer to pages 271 to 273 for details.

575 Delta Primary Volts 575Y Secondary Volts 60 Hz

kVA	Catalog Number	Case Style (Pages 260 - 267)	Dimensions Width	Depth	Height	Approx. Weight (Lbs.)	Mtg Type W - Wall F - Floor	Wiring Diagram (Pages 276 - 288)
7.5	Outside of C802.2/TP1 guidelines, refer to Non-Energy Efficient Drive Isolation Transformers on page 130							
11	Outside of C802.2/TP1 guidelines, refer to Non-Energy Efficient Drive Isolation Transformers on page 130							
14	Outside of C802.2/TP1 guidelines, refer to Non-Energy Efficient Drive Isolation Transformers on page 130							
20	**DE020NNCN**	NH6	23.90	25.00	28.75	270	F or W *	SCD 7
27	**DE027NNCN**	NH6	23.90	25.00	28.75	330	F or W *	SCD 7
34	**DE034NNCN**	NH6	23.90	25.00	28.75	350	F or W *	SCD 7
40	**DE040NNCN**	NH6	23.90	25.00	28.75	380	F or W *	SCD 7
51	**DE051NNC**	NH6	23.90	25.00	28.75	450	F or W *	SCD 7
63	**DE063NNC**	NH3	26.00	25.00	38.00	550	F or W *	SCD 7
75	**DE075NNC**	NH3	26.00	25.00	38.00	600	F or W *	SCD 7
93	**DE093NNC**	NH3	26.00	25.00	38.00	630	F or W *	SCD 7
118	**DE118NNC**	NH3	26.00	25.00	38.00	880	F	SCD 7
145	**DE145NNC**	NH4	32.00	29.50	41.00	930	F	SCD 7
175	**DE175NNC**	NH4	32.00	29.50	41.00	1100	F	SCD 7
220	**DE220NNC**	NH4	32.00	29.50	41.00	1450	F	SCD 9
275	**DE275NNC**	NJ1	39.50	34.00	51.50	1680	F	SCD 9
330	**DE330NNC**	NJ1	39.50	34.00	51.50	1850	F	SCD 9
440	**DE440NNC**	NJ2	48.50	38.40	59.00	2350	F	SCD 10
550	**DE550NNC**	NJ2	48.50	38.40	59.00	2800	F	SCD 10
660	**DE660NNC**	NJ3	51.50	43.40	66.00	3250	F	SCD 10

For shielded units, please replace the suffix "C" with a 'K' on the above part numbers. (i.e. DE075NNK)

*Wall mounting kit and/or drip plate kit required. Refer to pages 271 to 273 for details.

Products listed on this page are available as 'CE Mark' products. Please consult our sales office.

For termination details see page 142

For accessories see pages 271 to 274

© Hammond Power Solutions Inc.

Data subject to change without notice.

TERMINATION DETAILS

THREE PHASE, ALUMINUM AND COPPER TERMINATION - LUGS OR PADS

kVA	VOLTAGE							
	208	230	240	380	460	480	575	600
7.5	Lugs	Lugs	Lugs	Lugs	Lugs	Lugs	Lugs	Lugs
11	Lugs	Lugs	Lugs	Lugs	Lugs	Lugs	Lugs	Lugs
14	Lugs	Lugs	Lugs	Lugs	Lugs	Lugs	Lugs	Lugs
20	Lugs	Lugs	Lugs	Lugs	Lugs	Lugs	Lugs	Lugs
27	Lugs	Lugs	Lugs	Lugs	Lugs	Lugs	Lugs	Lugs
34	Lugs	Lugs	Lugs	Lugs	Lugs	Lugs	Lugs	Lugs
40	Lugs	Lugs	Lugs	Lugs	Lugs	Lugs	Lugs	Lugs
51	Lugs	Lugs	Lugs	Lugs	Lugs	Lugs	Lugs	Lugs
63	Lugs	Lugs	Lugs	Lugs	Lugs	Lugs	Lugs	Lugs
75	Lugs	Lugs	Lugs	Lugs	Lugs	Lugs	Lugs	Lugs
93	Lugs	Lugs	Lugs	Lugs	Lugs	Lugs	Lugs	Lugs
118	Diagram 1A	Diagram 1A	Diagram 1A	Lugs	Lugs	Lugs	Lugs	Lugs
145	Diagram 1A	Diagram 1A	Diagram 1A	Lugs	Lugs	Lugs	Lugs	Lugs
175	Diagram 1A	Diagram 1A	Diagram 1A	Lugs	Lugs	Lugs	Lugs	Lugs
220	Diagram 2	Diagram 1A	Diagram 1A	Diagram 1A	Diagram 1A	Lugs	Lugs	Lugs
275	Diagram 2	Diagram 2	Diagram 2	Diagram 1A	Diagram 1A	Diagram 1A	Diagram 1A	Lugs
330	Diagram 2	Diagram 2	Diagram 2	Diagram 1A	Diagram 1A	Diagram 1A	Diagram 1A	Diagram 1A
440	Diagram 3	Diagram 3	Diagram 3	Diagram 2	Diagram 1A	Diagram 1A	Diagram 1A	Diagram 1A
550	Diagram 3	Diagram 3	Diagram 3	Diagram 2	Diagram 2	Diagram 2	Diagram 1A	Diagram 1A
660	Diagram 3	Diagram 3	Diagram 3	Diagram 3	Diagram 2	Diagram 2	Diagram 2	Diagram 2

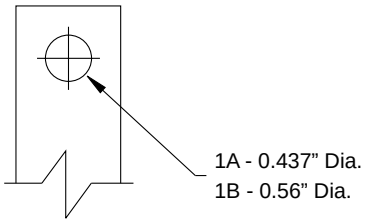

DIAGRAM 1

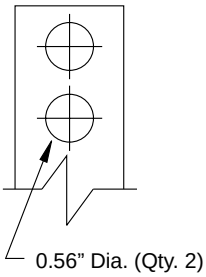

DIAGRAM 2

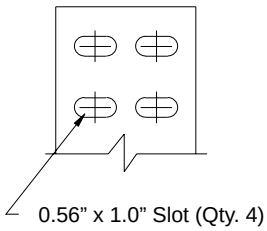

DIAGRAM 3

For termination details see page 142

For accessories see pages 271 to 274

© Hammond Power Solutions Inc.
Data subject to change without notice.

SECTION 5

MOTOR STARTING AUTOTRANSFORMERS

Copper Wound
Two Coil and Three Coil

Description and Applications 144

Copper Standard Specifications 145

Dimensional Drawings 145

Copper, Three Phase, 2 Coil Selection Tables 146

Copper, Three Phase, 3 Coil Selection Tables 147

Optional Thermostats 148

THREE PHASE MOTOR STARTING AUTOTRANSFORMERS

HPS 2A and 3A motor starting autotransformers have been an industry standard for many years. Autotransformers are a significant component of a motor controller. In its simplest form, motor starters start and stop a motor and protect against overvoltage and undervoltage. In most applications, a simple full-voltage magnetic starter places full voltage across the motor's windings on startup and maintains full voltage at the motor during the run mode.

For larger motors, or motors where the load is connected, the effect of motor-starting inrush can stress the electrical system with significantly lower currents in the distribution network. This can cause all manner of disruption to the system with subsequent interruption in the facility. In these cases, reduced-voltage starting must be applied. The addition of a motor starting autotransformer during the startup sequence limits the starting inrush current.

The 2A and 3A product line is designed for Medium Duty service including applications for drive loads such as pumps, compressors, conveyers and fans. Units are manufactured in accordance with NEMA Industrial Controls and Systems, Publication No. ICS-1970.

2A Motor Starting Autotransformer: Three phase, 2 coil, suitable for motor starters with 2 contacts, connected in an open 'V' configuration. Phase voltage across the open 'V' tends to be slightly out of balance when compared to the other two phases.

3A Motor Starting Autotransformer: Three phase, 3 coil, suitable for motor starters with 3 contacts, connected in a three phase 'Wye' configuration. This provides balanced voltages across each phase.

Special Motor Starting Autotransformers. For applications requiring heavy duty service with frequent starts or jogging, high inertia loads such as paper or steel mill drives, medium voltage or other unusual demands, HPS can offer specially designed units to meet your requirements. Please consult our sales offices.

TWO COIL

20 to 1600 HP

THREE COIL

25 to 1600 HP

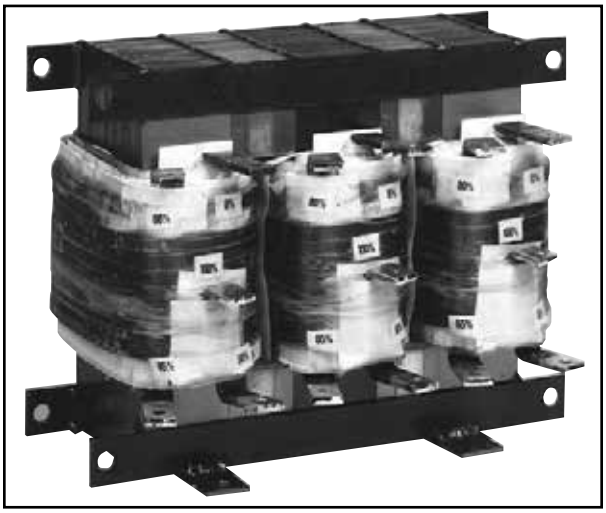

© Hammond Power Solutions Inc.

Data subject to change without notice.

COPPER WOUND STANDARD SPECIFICATIONS

	TWO COIL 20 to 1600 HP	THREE COIL 25 to 1600 HP
UL Listed	File: E61431	File: E61431
CSA Certified	File: LR3902	File: LR3902
Frequency	60 Hz	60 Hz
Insulation System	220°C	220°C
Standard Design	Three Phase, 2 Coil, using economical open core and coil construction.	Three Phase, 3 Coil, using economical open core and coil construction.
Standard Taps	All units have taps at 50%, 65% and 80%.	All units have taps at 50%, 65%, 80%
Termination	Heavy solid copper lugs with holes, provide reliable termination.	Heavy solid copper lugs with holes, provide reliable termination.
Thermostats	1 or 2 optional thermostats are available. (See page 148 for details.)	1, 2 or 3 optional thermostats are available. (See page 148 for details.)

DIMENSIONAL DRAWINGS

TWO COIL

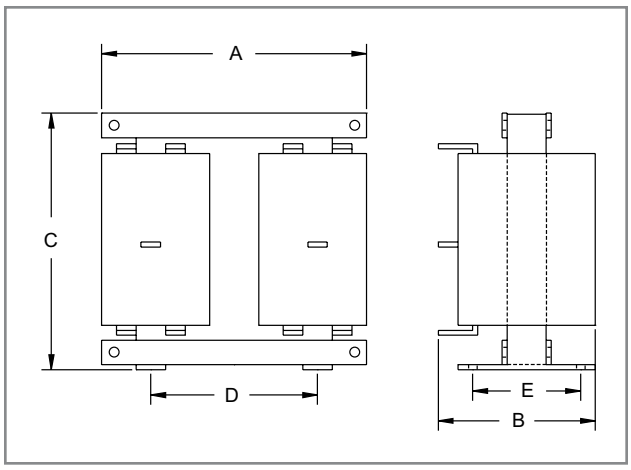

THREE COIL

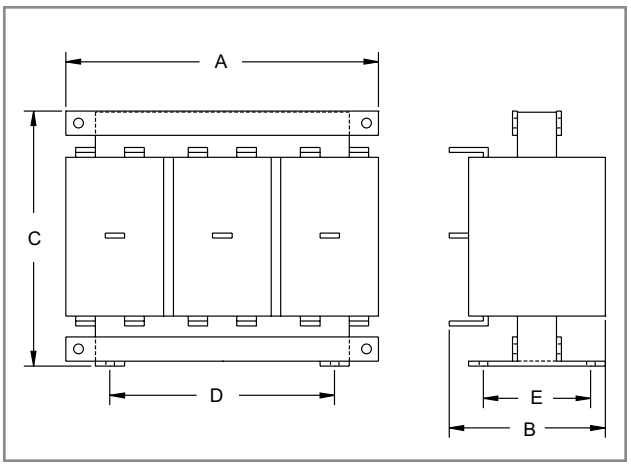

© Hammond Power Solutions Inc.
Data subject to change without notice.

COPPER WOUND, THREE PHASE, TWO COIL

Two Coil - 240 Volts — 60 Hz

HP	Voltage	Catalog Number	Dimensions A	Dimensions B	Dimensions C	Mtg. Width D	Mtg. Depth E	Approx. Weight (Lbs.)
20/25	240	**2909B.2**	11.50	6.00	10.25	9.00	4.00	45
30/40	240	**2909B.4**	11.50	6.25	10.75	9.00	4.00	65
50	240	**2909B.5**	11.50	7.25	11.00	9.00	6.00	75
60/75	240	**2909B.75**	13.50	8.00	11.50	9.00	6.00	120
100	240	**2909B1.**	13.50	9.25	11.50	9.00	7.50	150
125/150	240	**2909B1.5**	14.50	10.00	12.75	9.00	7.50	190
200	240	**2909B2.**	14.50	10.50	12.75	9.00	7.50	220
250	240	**2909B2.5**	14.50	11.75	13.25	9.00	9.00	230
300	240	**2909B3.**	14.50	12.00	14.00	9.00	9.00	260
400	240	**2909B4.**	17.00	12.50	15.75	9.00	9.00	330
500	240	**2909B5.**	17.00	13.00	16.25	9.00	9.00	375
600	240	**2909B6.**	23.00	16.00	18.00	12.00	9.00	550
800	240	**2909B8.**	25.00	17.00	20.00	12.00	9.00	700
1000	240	**2909B10.**	26.00	18.00	22.00	12.00	9.00	800
1200	240	**2909B12.**	29.00	19.00	24.00	12.00	12.00	1050
1600	240	**2909B16.**	32.00	20.00	26.00	12.00	12.00	1350

Two Coil - 480 Volts — 60 Hz

HP	Voltage	Catalog Number	Dimensions A	Dimensions B	Dimensions C	Mtg. Width D	Mtg. Depth E	Approx. Weight (Lbs.)
20/25	480	**2909C.2**	11.50	6.00	10.25	9.00	4.00	45
30/40	480	**2909C.4**	11.50	6.25	10.75	9.00	4.00	65
50	480	**2909C.5**	11.50	7.25	11.00	9.00	6.00	75
60/75	480	**2909C.75**	13.50	8.00	11.50	9.00	6.00	120
100	480	**2909C1.**	13.50	9.25	11.50	9.00	7.50	150
125/150	480	**2909C1.5**	14.50	10.00	12.75	9.00	7.50	190
200	480	**2909C2.**	14.50	10.50	12.75	9.00	7.50	220
250	480	**2909C2.5**	14.50	11.75	13.25	9.00	9.00	230
300	480	**2909C3.**	14.50	12.00	14.00	9.00	9.00	260
400	480	**2909C4.**	17.00	12.50	15.75	9.00	9.00	330
500	480	**2909C5.**	17.00	13.00	16.25	9.00	9.00	375
600	480	**2909C6.**	23.00	16.00	18.00	12.00	9.00	550
800	480	**2909C8.**	25.00	17.00	20.00	12.00	9.00	700
1000	480	**2909C10.**	26.00	18.00	22.00	12.00	9.00	800
1200	480	**2909C12.**	29.00	19.00	24.00	12.00	12.00	1050
1600	480	**2909C16.**	32.00	20.00	26.00	12.00	12.00	1350

Two Coil - 600 Volts — 60 Hz

HP	Voltage	Catalog Number	Dimensions A	Dimensions B	Dimensions C	Mtg. Width D	Mtg. Depth E	Approx. Weight (Lbs.)
20/25	600	**2909D.2**	11.50	6.00	10.25	9.00	4.00	45
30/40	600	**2909D.4**	11.50	6.25	10.75	9.00	4.00	65
50	600	**2909D.5**	11.50	7.25	11.00	9.00	6.00	75
60/75	600	**2909D.75**	13.50	8.00	11.50	9.00	6.00	120
100	600	**2909D1.**	13.50	9.25	11.50	9.00	7.50	150
125/150	600	**2909D1.5**	14.50	10.00	12.75	9.00	7.50	190
200	600	**2909D2.**	14.50	10.50	12.75	9.00	7.50	220
250	600	**2909D2.5**	14.50	11.75	13.25	9.00	9.00	230
300	600	**2909D3.**	14.50	12.00	14.00	9.00	9.00	260
400	600	**2909D4.**	17.00	12.50	15.75	9.00	9.00	330
500	600	**2909D5.**	17.00	13.00	16.25	9.00	9.00	375
600	600	**2909D6.**	23.00	16.00	18.00	12.00	9.00	550
800	600	**2909D8.**	25.00	17.00	20.00	12.00	9.00	700
1000	600	**2909D10.**	26.00	18.00	22.00	12.00	9.00	800
1200	600	**2909D12.**	29.00	19.00	24.00	12.00	12.00	1050
1600	600	**2909D16.**	32.00	20.00	26.00	12.00	12.00	1350

Other voltages and 50Hz units are available upon request.

© Hammond Power Solutions Inc.

Data subject to change without notice.

COPPER WOUND, THREE PHASE, THREE COIL

Three Coil - 240 Volts — 60 Hz

HP	Voltage	Catalog Number	Dimensions A	Dimensions B	Dimensions C	Mtg. Width D	Mtg. Depth E	Approx. Weight (Lbs.)
25/30	240	**3009B.3**	11.50	6.50	8.75	9.00	4.00	65
40/50	240	**3009B.5**	11.50	7.75	9.00	9.00	6.00	80
60/75	240	**3009B.75**	13.50	8.00	10.25	9.00	6.00	125
100	240	**3009B1.**	13.50	8.75	10.25	9.00	6.00	140
125/150	240	**3009B1.5**	14.50	10.00	10.75	9.00	7.00	165
200	240	**3009B2.**	15.00	10.50	10.75	9.00	7.00	210
250	240	**3009B2.5**	15.75	12.00	11.50	9.00	8.25	245
300	240	**3009B3.**	15.75	12.25	12.00	9.00	8.25	275
400	240	**3009B4.**	17.00	12.50	14.00	9.00	8.25	320
500	240	**3009B5.**	17.00	12.50	14.50	9.00	8.25	345
600	240	**3009B6.**	21.00	14.00	16.00	12.00	9.00	450
800	240	**3009B8.**	23.00	15.00	18.00	12.00	9.00	600
1000	240	**3009B10.**	24.00	16.00	20.00	12.00	9.00	700
1200	240	**3009B12.**	27.00	17.00	22.00	12.00	12.00	900
1600	240	**3009B16.**	30.00	18.00	24.00	12.00	12.00	1200

Three Coil - 480 Volts — 60 Hz

HP	Voltage	Catalog Number	Dimensions A	Dimensions B	Dimensions C	Mtg. Width D	Mtg. Depth E	Approx. Weight (Lbs.)
25/30	480	**3009C.3**	11.50	6.50	8.75	9.00	4.00	65
40/50	480	**3009C.5**	11.50	7.75	9.00	9.00	6.00	80
60/75	480	**3009C.75**	13.50	8.00	10.25	9.00	6.00	125
100	480	**3009C1.**	13.50	8.75	10.25	9.00	6.00	140
125/150	480	**3009C1.5**	14.50	10.00	10.75	9.00	7.00	165
200	480	**3009C2.**	15.00	10.50	10.75	9.00	7.00	210
250	480	**3009C2.5**	15.75	12.00	11.50	9.00	8.25	245
300	480	**3009C3.**	15.75	12.25	12.00	9.00	8.25	275
400	480	**3009C4.**	17.00	12.50	14.00	9.00	8.25	320
500	480	**3009C5.**	17.00	12.50	14.50	9.00	8.25	345
600	480	**3009C6.**	21.00	14.00	16.00	12.00	9.00	450
800	480	**3009C8.**	23.00	15.00	18.00	12.00	9.00	600
1000	480	**3009C10.**	24.00	16.00	20.00	12.00	9.00	700
1200	480	**3009C12.**	27.00	17.00	22.00	12.00	12.00	900
1600	480	**3009C16.**	30.00	18.00	24.00	12.00	12.00	1200

Three Coil - 600 Volts — 60 Hz

HP	Voltage	Catalog Number	Dimensions A	Dimensions B	Dimensions C	Mtg. Width D	Mtg. Depth E	Approx. Weight (Lbs.)
25/30	600	**3009D.3**	11.50	6.50	8.75	9.00	4.00	65
40/50	600	**3009D.5**	11.50	7.75	9.00	9.00	6.00	80
60/75	600	**3009D.75**	13.50	8.00	10.25	9.00	6.00	125
100	600	**3009D1.**	13.50	8.75	10.25	9.00	6.00	140
125/150	600	**3009D1.5**	14.50	10.00	10.75	9.00	7.00	165
200	600	**3009D2.**	15.00	10.50	10.75	9.00	7.00	210
250	600	**3009D2.5**	15.75	12.00	11.50	9.00	8.25	245
300	600	**3009D3.**	15.75	12.25	12.00	9.00	8.25	275
400	600	**3009D4.**	17.00	12.50	14.00	9.00	8.25	320
500	600	**3009D5.**	17.00	12.50	14.50	9.00	8.25	345
600	600	**3009D6.**	21.00	14.00	16.00	12.00	9.00	450
800	600	**3009D8.**	23.00	15.00	18.00	12.00	9.00	600
1000	600	**3009D10.**	24.00	16.00	20.00	12.00	9.00	700
1200	600	**3009D12.**	27.00	17.00	22.00	12.00	12.00	900
1600	600	**3009D16.**	30.00	18.00	24.00	12.00	12.00	1200

Other voltages and 50Hz units are available upon request.

© Hammond Power Solutions Inc.

Data subject to change without notice.

OPTIONAL THERMOSTATS

All HPS Motor Starting Autotransformers are available with optional thermostats. Thermostats are supplied with normally closed contacts and will provide a corresponding signal when coil temperatures exceed safe operating conditions. Each thermostat installed is supplied with standard leads.

Two Coil - Thermostat Options

Part Number	Description	Installation
T1	One Thermostat	Single thermostat installed in the left coil.
T2	Two Thermostats	One thermostat installed in both coils.

Three Coil - Thermostat Options

Part Number	Description	Installation
T1	One Thermostat	Single thermostat installed in the center coil.
T2	Two Thermostats	One thermostat installed in the left hand coil and one installed in the right coil.
T3	Three Thermostats	One thermostat installed in each of the three coils.

© Hammond Power Solutions Inc.
Data subject to change without notice.

SECTION 6

HPS UNIVERSAL™ LOW VOLTAGE LIGHTING TRANSFORMERS

Encapsulated Single Phase Enclosed

Single Phase Applications & Standard Specifications.. 150

Group A Selection Table 151

Group B Selection Table 151

Group C Selection Table 152

Enclosure Drawings 262

SINGLE PHASE LOW VOLTAGE TRANSFORMER APPLICATIONS

For a cost effective approach to supply low voltage for Recreational, Lighting, Light Duty Industrial and Pool and Spa applications or for a general purpose load including actuating relays, bells, control and low voltage circuits, these NEMA 3R style encapsulated transformers are specifically designed for the following applications;

- General purpose applications used to adjust a supply voltage to match load equipment.
- Supplying machine tool circuits.
- Actuating relays, bells, signal and alarm systems.
- Operating small motors, valves and dampers.
- Industrial lighting and circuit isolation.
- Pool and Spa (Must be ordered in a NEMA 4X stainless steel enclosure. Only available up to 1000VA as 60 Hz unit.)

HPS single phase encapsulated control transformers, with ratings from 50VA up to 5000VA in three voltage ratings, feature the newest technology and manufacturing processes.

LOW VOLTAGE LIGHTING TRANSFORMER STANDARD SPECIFICATIONS

	15 to 333 kVA	15 to 1500 kVA
UL Listed	File: E50394	File: E50394
CSA Certified	File: LR3902	File: LR3902
Frequency	50/60 Hz	50/60 Hz
Insulation System	130°C (80°C rise)	180°C (115°C rise)
Standard Design	Single Phase, core construction made with high quality, high permeability silicon steel laminations. Computer designed coils are accurately wound from high quality copper magnetic wire.	Single Phase, core construction made with high quality, high permeability silicon steel laminations. Computer designed coils are accurately wound from high quality copper magnetic wire.
Encapsulation	All units from 50VA to 5kVA are encapsulated with electrical grade silica sand and resin compounds.	All units from 50VA to 5kVA are encapsulated with electrical grade silica sand and resin compounds.
Enclosure Type	Heavy Duty Encapsulated NEMA Type 3R optional NEMA 4, 4X(stainless) & 12 available	Heavy Duty Encapsulated NEMA Type 3R optional NEMA 4, 4X(stainless) & 12 available
Termination	ANSI 61 Grey, UL50	ANSI 61 Grey, UL50
Conduit Knock-Outs	Side and Rear standard on all units.	Side and Rear standard on all units.
Mounting	Standard Wall Mounting.	Standard Wall Mounting.

© Hammond Power Solutions Inc.
Data subject to change without notice.

Single Phase Specification Tables

Group A

Primary Voltage	**120/240**
Secondary Voltage	**12/24**
50/60 Hertz	

VA	Catalog Number	Case Style (Pages 262)	Approx. Dimensions (Inches) Width	Depth	Height	Approx. Weight (Lbs.)	Mtg Type W - Wall	Wiring Diagram (Pages 276)
50	**QC05ERCB**	NQ0	3.75	5.25	7.25	6	W	SCD 1
100	**QC10ERCB**	NQ0	3.75	5.25	7.25	7	W	SCD 1
150	**QC15ERCB**	NQ0	3.75	5.25	7.25	8	W	SCD 1
200	**QC20ERCB**	NQ1	4.50	5.75	7.25	11	W	SCD 1
250	**QC25ERCB**	NQ1	4.50	5.75	7.25	13	W	SCD 1
350	**QC35ERCB**	NQ1	4.50	5.75	7.25	14	W	SCD 1
500	**QC50ERCB**	NQ2	5.00	4.75	9.25	15	W	SCD 1
750	**QC75ERCB**	NQ2	5.00	4.75	9.25	18	W	SCD 1
1000	**Q1C0ERCB**	NQ3	5.88	5.50	10.50	25	W	SCD 1
1500	**Q1C5ERCF**	NQ4	7.00	6.50	11.75	36	W	SCD 1
2000	**Q002ERCF**	NQ4	7.00	6.50	11.75	46	W	SCD 1
3000	**Q003ERCF**	NQ5	10.00	7.75	17.25	65	W	SCD 1
5000	**Q005ERCF**	NQ5	10.00	7.75	17.25	105	W	SCD 1

Group B

Primary Voltage	**120/240**
Secondary Voltage	**16/32**
50/60 Hertz	

VA	Catalog Number	Case Style (Pages 262)	Approx. Dimensions (Inches) Width	Depth	Height	Approx. Weight (Lbs.)	Mtg Type W - Wall	Wiring Diagram (Pages 276)
50	**QC05ESCB**	NQ0	3.75	5.25	7.25	6	W	SCD 1
100	**QC10ESCB**	NQ0	3.75	5.25	7.25	7	W	SCD 1
150	**QC15ESCB**	NQ0	3.75	5.25	7.25	8	W	SCD 1
200	**QC20ESCB**	NQ1	4.50	5.75	7.25	11	W	SCD 1
250	**QC25ESCB**	NQ1	4.50	5.75	7.25	13	W	SCD 1
350	**QC35ESCB**	NQ1	4.50	5.75	7.25	14	W	SCD 1
500	**QC50ESCB**	NQ2	5.00	4.75	9.25	15	W	SCD 1
750	**QC75ESCB**	NQ2	5.00	4.75	9.25	18	W	SCD 1
1000	**Q1C0ESCB**	NQ3	5.88	5.50	10.50	25	W	SCD 1
1500	**Q1C5ESCF**	NQ4	7.00	6.50	11.75	36	W	SCD 1
2000	**Q002ESCF**	NQ4	7.00	6.50	11.75	46	W	SCD 1
3000	**Q003ESCF**	NQ5	10.00	7.75	17.25	65	W	SCD 1
5000	**Q005ESCF**	NQ5	10.00	7.75	17.25	105	W	SCD 1

© Hammond Power Solutions Inc.

Data subject to change without notice.

Single Phase Specification Tables

Group C

Primary Voltage	**240/480**
Secondary Voltage	**24/48**
50/60 Hertz	

VA	Catalog Number	Case Style (Pages 262)	Approx. Dimensions (Inches) Width	Depth	Height	Approx. Weight (Lbs.)	Mtg Type W - Wall	Wiring Diagram (Pages 276)
50	**QC05DTCB**	NQ0	3.75	5.25	7.25	6	W	SCD 1
100	**QC10DTCB**	NQ0	3.75	5.25	7.25	7	W	SCD 1
150	**QC15DTCB**	NQ0	3.75	5.25	7.25	8	W	SCD 1
200	**QC20DTCB**	NQ1	4.50	5.75	7.25	11	W	SCD 1
250	**QC25DTCB**	NQ1	4.50	5.75	7.25	13	W	SCD 1
350	**QC35DTCB**	NQ1	4.50	5.75	7.25	14	W	SCD 1
500	**QC50DTCB**	NQ2	5.00	4.75	9.25	15	W	SCD 1
750	**QC75DTCB**	NQ2	5.00	4.75	9.25	18	W	SCD 1
1000	**Q1C0DTCB**	NQ3	5.88	5.50	10.50	25	W	SCD 1
1500	**Q1C5DTCF**	NQ4	7.00	6.50	11.75	36	W	SCD 1
2000	**Q002DTCF**	NQ4	7.00	6.50	11.75	46	W	SCD 1
3000	**Q003DTCF**	NQ5	10.00	7.75	17.25	65	W	SCD 1
5000	**Q005DTCF**	NQ5	10.00	7.75	17.25	105	W	SCD 1

© Hammond Power Solutions Inc.

Data subject to change without notice.

SECTION 7

ENERGY EFFICIENT GENERAL PURPOSE LOW VOLTAGE DISTRIBUTION TRANSFORMERS

600V Class, Single Phase & Three Phase

Low Voltage Distribution Transformer Energy Efficiency Guidelines U.S.A..... 154
Low Voltage Distribution Transformer Energy Efficiency Guidelines Canada.. 155
NEMA Premium® Efficiency Transformer Program..... 156
Product Features and Applications..... 157
Energy Efficient Distribution Transformer Product Summary 157

HPS Sentinel® Series - Energy Efficient General Purpose Transformers
HPS Sentinel® - copper & aluminum, single & three phase 159
HPS SuperSentinel® - copper & aluminum, single & three phase 174

HPS Synergy® Series - Energy Efficient K-Factor Transformers
K-Factor, Harmonics and Non-Linear Loads 189
HPS Synergy® - copper & aluminum, three phase 191
HPS SuperSynergy® - copper & aluminum, three phase 196

HPS Centurion® Series - Energy Efficient Harmonic Mitigating Transformers
600V Class Harmonic Mitigating Transformer..... 202
HPS Centurion® - copper & aluminum, three phase 203
HPS SuperCenturion® - copper & aluminum, three phase 213

Enclosure Dimensional Drawings 260
Accessories - Enclosure Mounting Kits, Anti-Vibration Pads & Isolators 271
Termination Details 275

Low Voltage Distribution Transformer Energy Efficiency Guidelines

In the past several years, there has been an accelerated rate of change to introduce energy efficiency standards for transformers in North America. Many products have preceded the initiatives for transformers in an overall effort to optimize manufactured goods for environmental concerns. Governments are encouraging users to consider energy efficient products like dry-type transformers in an effort to help reduce carbon dioxide emissions.

In addition to the benefits to the environment, energy efficient transformers realize substantial savings in operating costs, thereby having a direct impact on the initial investment evaluated over a period of time.

United States - Energy Efficiency (DOE 10 CFR Part 431)

The laws in the U.S. state that all low voltage dry-type distribution transformers (as defined below) manufactured after January 1st, 2007, must meet the minimum energy efficiency standards outlined in DOE 10 CFR Part 431 (typically referred to as TP1). The range of product covered by these standards are:

Voltage Rating	Primary Voltage	600 volt and below
	Secondary Voltage	600 volt and below
Dry-Type Rating	Single Phase	15-333 kVA
	Three Phase	15-1000 kVA
Frequency		60 Hz only

For transformers exempted from the DOE efficiency regulations please refer to the following DOE link:
http://www.access.gpo.gov/nara/cfr/waisidx_09/10cfr431_09.html

The HPS lines of 600 volt class energy efficient distribution transformers illustrated in this section, meet or exceed the minimum efficiencies required. These efficiencies are evaluated at 35% of the nameplate rated load.

The standards covering 600 volt class energy efficiency in dry-type transformers in North America are outlined in DOE 10 CFR Part 431/TP1, “Energy Conservation Program for Commercial Equipment: Distribution Transformers Energy Conservation Standards; Final Rule”. These specifications have carefully considered the total owning cost unique for industrial or commercial installations where the load factor is an integral part of the efficiency rating.

US Department of Energy DOE 10 CFR Part 431/TP1 Efficiency Levels Dry-Type Distribution Transformers - Low Voltage			
Single Phase		Three Phase	
kVA	Efficiency	kVA	Efficiency
15	97.70	15	97.00
25	98.00	30	97.50
37.5	98.20	45	97.70
50	98.30	75	98.00
75	98.50	112.5	98.20
100	98.60	150	98.30
167	98.70	225	98.50
250	98.80	300	98.60
333	98.90	500	98.70
		750	98.80
		1000	98.90

All efficiency values are at 35% of nameplate rated load

For termination details see page 275.
For accessories see pages 271 to 274.

© Hammond Power Solutions Inc.
Data subject to change without notice.

Low Voltage Distribution Transformer Energy Efficiency Guidelines Continued...

Canada - Energy Efficiency (CSA C802.2)

The laws in Canada state that all low voltage dry-type distribution transformers (as defined below) manufactured after January 1st, 2005, must meet the minimum energy efficiency guidelines outlined by CSA C802.2 and referenced in the Canadian Energy Efficiency Act - Energy Efficiency Regulations (SOR/94-651). The range of product covered by these standards are:

Primary (high) Voltage		Up to 1.2 kV
Secondary (low) Voltage Line Current		Less than 4000 amps
Dry-Type Rating	**Single Phase**	15-333 kVA
	Three Phase	15-1000 kVA
Frequency		60 Hz only

For transformers exempted from the Canadian Efficiency Regulations please refer to the following link: http://laws.justice.gc.ca/eng/sor-94-651/page-1.html or: http://www.hammondpowersolutions.com/products/locate_by_product/energy_efficient_distribution_transformers/index.php

The HPS lines of 1.2 kV volt class energy efficient distribution transformers illustrated in this section, meet or exceed the minimum efficiencies required. These efficiencies are evaluated at 35% of the nameplate kVA transformer capacity.

The specifications covering 1.2 kV volt class energy efficiency in transformers in Canada are outlined in the CSA Efficiency Standard Document C802, “Maximum Losses for Distribution, Power and Dry-Type Transformers” as referenced in the Canadian Energy Efficiency Act - Energy Efficiency Regulations (SOR/94-651). These specifications have carefully considered the total owning cost unique for industrial or commercial installations where the load factor is an integral part of the efficiency rating.

CSA Efficiency Standard Document C802.2 Efficiency Levels Dry-Type Distribution Transformers - Low Voltage			
Single Phase		**Three Phase**	
kVA	**Efficiency**	**kVA**	**Efficiency**
15	97.70	15	97.00
25	98.00	30	97.50
37.5	98.20	45	97.70
50	98.30	75	98.00
75	98.50	112.5	98.20
100	98.60	150	98.30
167	98.70	225	98.50
250	98.80	300	98.60
333	98.90	500	98.70
		750	98.80
		1000	98.90

All efficiency values are at 35% of nameplate rated load

© Hammond Power Solutions Inc.
Data subject to change without notice.

NEMA Premium® Efficiency Transformer Program

The 1992 Energy Act was a significant evolution in regulating low voltage dry-type transformers for the reduction of national energy use. Market pressures, however, indicated that customers were interested in even higher efficiencies. However with no guidelines in place, many manufacturers started to offer a multitude of higher efficiency transformer products, most of these without a well defined consistent specification.

On June 9th, 2010 the National Electrical Manufacturers Association (NEMA) announced the initiation of the NEMA Premium® Efficiency Transformer Program, which will help utilities, commercial buildings, and industrial plants incorporate super high-efficiency electrical transformers into their operations.

NEMA originally set the standard for the efficiency of various types of distribution transformers with the publication of NEMA TP 1-2002 Guide for Determining Energy Efficiency for Distribution Transformers, which was later adopted by the U.S. Department of Energy (DOE) as the national energy-efficiency rule for low-voltage dry-type distribution transformers. The new NEMA Premium® Efficiency Transformer designation requires 30 percent fewer losses than existing DOE regulations (10 CFR 431) for low-voltage dry-type distribution transformers.

The transformers covered under the new program are typically used in commercial and industrial applications. However, some electric utilities are considering the NEMA program for their commercial and industrial energy-efficiency rebate programs. The adoption of this program will not only reduce energy consumption, but will also significantly reduce carbon dioxide emissions.

Hammond Power Solutions Inc (HPS) has already been offering super high efficiency transformer lines in the market for many years (the HPS SuperSentinel®, HPS SuperSynergy® and HPS SuperCenturion®). HPS has now updated these lines to meet the efficiency levels in the new NEMA Premium® Efficiency Transformer Program.

For more information about the NEMA Premium® Efficiency Transformer Program, visit;
http://www.nema.org/gov/energy/efficiency/premium/transformersProgram.cfm

Please Note; not all premium efficiency low voltage dry-type are the same and the user should closely look at the other design parameters that could affect their system performance.

As a Partner in the NEMA Premium® Efficiency Transformer Program, HPS has determined that the products indicated in this section with the NEMA Premium® logo meet the NEMA Premium® Efficiency guidelines for super high-efficiency. (NEMA Premium® is a trademark of National Electrical Manufacturers Association.)

© Hammond Power Solutions Inc.
Data subject to change without notice.

Product Features and Applications:

HPS offers three lines of energy efficient distribution transformers:

Linear Load General Purpose Transformers (pages 159 to 188)
General purpose distribution transformers are rated for 600 volts and below. They are generally used for supplying appliance, lighting, heating, motorized machine and power loads from electrical distribution systems. They are either ventilated, totally enclosed. For non-linear loads, all standard DOE 10 CFR Part 431/TP1 distribution transformers have to be derated to allow for additional heat due to harmonic losses.

Non-Linear Load K-Factor Transformers (pages 189 to 201)
The use of k-factor distribution transformers has become a popular means of addressing harmonic related overheating problems where electronic ballasts, drives, personal computers, telecommunications equipment, broadcasting equipment and other similar power electronics are found in high concentrations. These non-linear loads generate harmonic currents which can substantially increase transformer losses. The k-rated transformer has a more rugged design intended to prevent failure due to overheating.

K-factor is defined as a ratio between the additional losses due to harmonics and the eddy current losses at 60Hz. It is used to specify transformers for non-linear loads. Transformers with a rated k-factor of 4, 13, 20 and other are available.

Harmonic Mitigating Transformers (pages 202 to 222)
Harmonic Mitigating transformers are superior to k-rated and general purpose transformers in that they reduce voltage distortion (flat-topping) and power losses due to current harmonics created by single-phase, non-linear loads such as computer equipment. Secondary windings are arranged to **cancel** zero sequence fluxes and eliminate primary winding circulating currents. They treat zero sequence harmonics (3rd, 9th and 15th) within the secondary windings and 5th and 7th harmonics upstream with appropriate phase shifting.

Dual output, phase shifting Harmonic Mitigating Transformers provide extremely low output voltage distortion and input current distortion even under severe non-linear load conditions (Data Centers, Internet Service Providers, Telecom Sites, Call Centers, Broadcasting Studios, etc.). Combining zero sequence flux cancellation with phase shifting treats 3rd, 5th, 7th, 9th, 15th, 17th and 19th harmonics within its secondary windings.

HPS Energy Efficient Distribution Transformer Product Offering:

Energy Efficient General Purpose Transformers:

Energy efficient general purpose transformers are designed for linear loads and are most frequently used for applications such as commercial buildings, which will supply a variety of general loads.

HPS SENTINEL® (PART NUMBER PREFIX NMK OR NMF)
- Meets **DOE 10 CFR Part 431/TP1** and **C802.2** efficiencies at **35%** of rated load.
- Efficiencies are calculated under a **linear load profile**.
- Copper and Aluminum Available.

HPS SUPERSENTINEL® (PART NUMBER PREFIX SMK OR SMF)
- **Exceeds DOE 10 CFR Part 431/TP1** and (if applicable) **CSA C802.2** efficiencies at **35%** of rated load.
- Efficiency performance will meet the **NEMA Premium®** guidelines; **30% lower losses** than DOE 10 CFR Part 431/TP1 and (if applicable) CSA C802.2 standards; when measured under a linear load profile.
- Copper and Aluminum Available.

NEMA Premium

FOR TERMINATION DETAILS SEE PAGE 275.

FOR ACCESSORIES SEE PAGES 271 TO 274.
© Hammond Power Solutions Inc.
Data subject to change without notice.

HPS Energy Efficient Distribution Transformer Product Offering
Continued...

Energy Efficient K-Factor Transformers:

HPS SYNERGY® (PART NUMBER PREFIX NMT)

Energy efficient K-Factor transformers are designed to tolerate heating due to harmonics associated with non-linear loads. Harmonics can indicate their presence in a number of ways: overheating, device malfunctions, telephone interference; equipment vibration; and breakers tripping.

- Meets **DOE 10 CFR Part 431/TP1** and **C802.2** efficiencies at **35%** of rated load.
- Efficiencies are calculated under a **linear load profile**.
- Copper and Aluminum Available.

HPS SUPERSYNERGY® (PART NUMBER PREFIX SMT)

The HPS SuperSynergy energy efficient k-factor transformer exceeds DOE 10 CFR Part 431/TP1 and (if applicable) CSA C802.2 efficiencies over a range of linear loads. It will not only satisfy the necessity for running at K-Factor modern building load types, but in addition, because of the increasing need for energy conservation, they are much more efficient than that of our standard energy efficient line.

- Efficiency performance will meet the **NEMA Premium®** guidelines; **30% lower losses** than DOE 10 CFR Part 431/TP1 and (if applicable) CSA C802.2 efficiency standards; when measured under a linear load profile at **35%** of rated load.
- Efficiency will meet or exceed DOE 10 CFR Part 431/TP1 and (if applicable) CSA C802.2 efficiency standards for linear load even at **50%** of rated load when measured under a **non-linear** load up to **K13**.
- Copper and Aluminum Available.

Energy Efficient Harmonic Mitigating Transformers:

The HPS Centurion energy efficient, harmonic mitigating transformer with zero sequence flux cancellation technology is specifically designed to treat the harmonics generated by computer equipment and other non-linear, power electronic loads.
Combining zero sequence flux cancellation with phase shifting treats 3rd, 5th, 7th, 9th, 15th, 17th and 19th, harmonics within its secondary windings. Typical applications of severe non-linear loading conditions include data centers, internet-service providers, telecom sites, call centers, broadcast centers, etc.

HPS CENTURION® (PART NUMBER PREFIX H1EM OR H2EM)

- Meets **DOE 10 CFR Part 431/TP1 and C802.2** efficiencies at an operating range from **35% to 65%** of rated linear load.
- Meets **DOE 10 CFR Part 431/TP1** and **C802.2** efficiency standards when measured under a **non-linear** load profile up to **K20** in an operating range from **35% to 50%**.
- Copper & Aluminum Available.

HPS SUPERCENTURION® (PART NUMBER PREFIX S1EM OR S2EM)

- **Exceeds DOE 10 CFR Part 431/TP1** and (if applicable) **C802.2** efficiencies at **35%** of rated load.
- Efficiency performance will meet **NEMA Premium®** guidelines; **30% lower losses** than **DOE 10 CFR Part 431/TP1** and (if applicable) CSA C802.2 efficiency standards when measured under a linear load profile.
- Efficiencies will exceed **DOE 10 CFR Part 431/TP1** and (if applicable) CSA C802.2 standards at an operating range from **35% to 65%** of rated load when measured under a **non-linear** load profile up to **K20**.
- Copper & Aluminum Available.

FOR TERMINATION DETAILS SEE PAGE 275.
FOR ACCESSORIES SEE PAGES 271 TO 274.

© Hammond Power Solutions Inc.
Data subject to change without notice.

HPS SENTINEL®

600 VOLT CLASS ENERGY EFFICIENT GENERAL PURPOSE DISTRIBUTION TRANSFORMERS

General Purpose Distribution Transformer Efficiencies:

Energy efficient general purpose transformers are designed for linear loads and are most frequently used for applications such as commercial buildings which will supply a variety of general loads.

HPS SENTINEL (PART NUMBER PREFIX NMK OR NMF)

- Meets **DOE 10 CFR Part 431/TP1** and **C802.2** efficiencies at **35%** of rated load.
- Efficiencies are calculated under a **linear load profile**.
- Copper and Aluminum Available.

FOR TERMINATION DETAILS SEE PAGE 275.

FOR ACCESSORIES SEE PAGES 271 TO 274.
© Hammond Power Solutions Inc.
Data subject to change without notice.

HPS SENTINEL®
600 VOLT CLASS ENERGY EFFICIENT GENERAL PURPOSE DISTRIBUTION TRANSFORMERS

ALUMINUM & COPPER, SINGLE PHASE STANDARD SPECIFICATIONS

15 to 37.5 kVA

50 to 167 kVA

	15 to 37.5 kVA	50 to 167 kVA
Efficiency	Meets DOE 10 CFR Part 431 & C802.2 efficiencies at 35% of rated load. Efficiencies are calculated under a linear load profile.	
UL Listed	File: E112313	File: E112313
CSA Certified	File: LR3902	File: LR3902
Frequency	60 Hz	60 Hz
Insulation System	220°C (150°C rise) (optional 115°C and 80°C rise available)	220°C (150°C rise) (optional 115°C and 80°C rise available)
Enclosure Type	Heavy Duty Ventilated Type 3R Optional Type 4, 4X (stainless steel) and 12.	Heavy Duty Ventilated Type 3R Optional Type 4, 4X (stainless steel) and 12.
Enclosure Finish	ANSI 61 Grey, UL50	ANSI 61 Grey, UL50
Standard Primary Taps	Refer to wiring diagrams for details.	Refer to wiring diagrams for details.
Termination	Front accessible separate high and low voltage terminals; connectors suitable for aluminum and copper are provided for easy cable installation.	Front accessible separate high and low voltage terminals; connectors suitable for aluminum and copper are provided for easy cable installation.
Conduit Knock-Outs	Standard on all units.	Standard on 50 kVA, 75 kVA & 100 kVA units.
Impedance	Typically 2.5% to 6.5%	Typically 2.5% to 6.5%
Mounting	Floor or wall/ceiling mounting available. Refer to selection tables for details.	Floor or wall/ceiling mounting available. Refer to selection tables for details.
Seismic	Seismically certified in accordance with IBC 2009; Section 1613 Earthquake Loads, for S_{DS} <= 2.00g , z/h = 1.0, and I_P = 1.5	Seismically certified in accordance with IBC 2009; Section 1613 Earthquake Loads, for S_{DS} <= 2.00g , z/h = 1.0, and I_P = 1.5
Sound level	Meets NEMA ST-20 standards. **(Optional low noise units available)**	Meets NEMA ST-20 standards. **(Optional low noise units available)**

Other voltages and kVA sizes not listed in this section are available upon request for both aluminum and copper wound units. Standard features as listed above may differ. Please contact customer service for details, price and availability.

FOR TERMINATION DETAILS SEE PAGE 275.

FOR ACCESSORIES SEE PAGES 271 TO 274.

© Hammond Power Solutions Inc.

Data subject to change without notice.

ALUMINUM WOUND, SINGLE PHASE

208 Primary Volts 120/240 Secondary Volts 60 Hz

kVA	Catalog Number	Case Style (Pages 260 - 267)	Approx. Dimensions (Inches) Width	Depth	Height	Approx. Weight (Lbs.)	Mtg Type W - Wall F - Floor	Wiring Diagram (Pages 276 - 288)
15	**NMF015BE**	NH5	19.40	20.20	21.50	170	F or W *	SCD 32
25	**NMF025BE**	NH6	23.90	25.00	28.75	220	F or W *	SCD 31
37.5	**NMF037BE**	NH6	23.90	25.00	28.75	260	F or W *	SCD 31
50	**NMF050BE**	NH3	26.00	25.00	38.00	375	F or W *	SCD 2
75	**NMF075BE**	NH3	26.00	25.00	38.00	500	F or W *	SCD 39
100	**NMF100BE**	NH4	32.00	29.50	41.00	650	F	SCD 39
150	**NMF150BE**	NJ4	32.00	32.50	50.00	850	F	SCD 39
167	**NMF167BE**	NJ4	32.00	32.50	50.00	950	F	SCD 39

For shielded units, please add the suffix "S" to the above part numbers.

*WALL MOUNTING KIT AND/OR DRIP PLATE KIT REQUIRED. REFER TO PAGES 271 TO 273 FOR DETAILS.

240 X 480 Primary Volts 120/240 Secondary Volts 60 Hz

kVA	Catalog Number	Case Style (Pages 260 - 267)	Approx. Dimensions (Inches) Width	Depth	Height	Approx. Weight (Lbs.)	Mtg Type W - Wall F - Floor	Wiring Diagram (Pages 276 - 288)
15	**NMF015LE**	NH5	19.40	20.20	21.50	170	F or W *	SCD 34
25	**NMF025LE**	NH6	23.90	25.00	28.75	220	F or W *	SCD 17
37.5	**NMF037LE**	NH6	23.90	25.00	28.75	260	F or W *	SCD 17
50	**NMF050LE**	NH3	26.00	25.00	38.00	370	F or W *	SCD 17
75	**NMF075LE**	NH3	26.00	25.00	38.00	500	F or W *	SCD 17
100	**NMF100LE**	NH4	32.00	29.50	41.00	650	F	SCD 17
150	**NMF150LE**	NJ4	32.00	32.50	50.00	850	F	SCD 17
167	**NMF167LE**	NJ4	32.00	32.50	50.00	900	F	SCD 17

For shielded units, please add the suffix "S" to the above part numbers.

*WALL MOUNTING KIT AND/OR DRIP PLATE KIT REQUIRED. REFER TO PAGES 271 TO 273 FOR DETAILS.

277 Primary Volts 120/240 Secondary Volts 60 Hz

kVA	Catalog Number	Case Style (Pages 260 - 267)	Approx. Dimensions (Inches) Width	Depth	Height	Approx. Weight (Lbs.)	Mtg Type W - Wall F - Floor	Wiring Diagram (Pages 276 - 288)
15	**NMF015FE**	NH5	19.40	20.20	21.50	170	F or W *	SCD 32
25	**NMF025FE**	NH6	23.90	25.00	28.75	260	F or W *	SCD 31
37.5	**NMF037FE**	NH6	23.90	25.00	28.75	400	F or W *	SCD 31
50	**NMF050FE**	NH3	26.00	25.00	38.00	450	F or W *	SCD 31
75	**NMF075FE**	NH3	26.00	25.00	38.00	650	F or W *	SCD 31
100	**NMF100FE**	NH4	32.00	29.50	41.00	700	F	SCD 39
150	**NMF150FE**	NJ4	32.00	32.50	50.00	830	F	SCD 39
167	**NMF167FE**	NJ4	32.00	32.50	50.00	880	F	SCD 39

For shielded units, please add the suffix "S" to the above part numbers.

*WALL MOUNTING KIT AND/OR DRIP PLATE KIT REQUIRED. REFER TO PAGES 271 TO 273 FOR DETAILS.

Note: For units smaller than 15kVA, please refer to the single phase encapsulated units in Section 8.

Products listed on this page are available as 'CE Mark' products. Please consult our sales office.

FOR TERMINATION DETAILS SEE PAGE 275.
FOR ACCESSORIES SEE PAGES 271 TO 274.

© Hammond Power Solutions Inc.
Data subject to change without notice.

ALUMINUM WOUND, SINGLE PHASE

416 Primary Volts 120/240 Secondary Volts 60 Hz

kVA	Catalog Number	Case Style (Pages 260 - 267)	Approx. Dimensions (Inches) Width	Depth	Height	Approx. Weight (Lbs.)	Mtg Type W - Wall F - Floor	Wiring Diagram (Pages 276 - 288)
15	**NMF015HE**	NH5	19.40	20.20	21.50	220	F or W *	SCD 32
25	**NMF025HE**	NH6	23.90	25.00	28.75	220	F or W *	SCD 31
37.5	**NMF037HE**	NH6	23.90	25.00	28.75	260	F or W *	SCD 31
50	**NMF050HE**	NH3	26.00	25.00	38.00	400	F or W *	SCD 31
75	**NMF075HE**	NH3	26.00	25.00	38.00	480	F or W *	SCD 31
100	**NMF100HE**	NH4	32.00	29.50	41.00	650	F	SCD 39
150	**NMF150HE**	NJ4	32.00	32.50	50.00	850	F	SCD 39
167	**NMF167HE**	NJ4	32.00	32.50	50.00	900	F	SCD 39

For shielded units, please add the suffix "S" to the above part numbers.

*Wall mounting kit and/or drip plate kit required. Refer to pages 271 to 273 for details.

600 Primary Volts 120/240 Secondary Volts 60 Hz

kVA	Catalog Number	Case Style (Pages 260 - 267)	Approx. Dimensions (Inches) Width	Depth	Height	Approx. Weight (Lbs.)	Mtg Type W - Wall F - Floor	Wiring Diagram (Pages 276 - 288)
15	**NMF015PE**	NH5	19.40	20.20	21.50	220	F or W *	SCD 32
25	**NMF025PE**	NH6	23.90	25.00	28.75	220	F or W *	SCD 31
37.5	**NMF037PE**	NH6	23.90	25.00	28.75	260	F or W *	SCD 31
50	**NMF050PE**	NH3	26.00	25.00	38.00	400	F or W *	SCD 31
75	**NMF075PE**	NH3	26.00	25.00	38.00	480	F or W *	SCD 31
100	**NMF100PE**	NH4	32.00	29.50	41.00	650	F	SCD 39
150	**NMF150PE**	NJ4	32.00	32.50	50.00	850	F	SCD 39
167	**NMF167PE**	NJ4	32.00	32.50	50.00	900	F	SCD 39

For shielded units, please add the suffix "S" to the above part numbers.

*Wall mounting kit and/or drip plate kit required. Refer to pages 271 to 273 for details.

SINGLE PHASE, EXPORT MODEL

190/200/208/220 X 380/400/416/440 Primary Volts 120/240 Secondary Volts 50/60 Hz**

kVA	Catalog Number	Case Style (Pages 260 - 267)	Approx. Dimensions (Inches) Width	Depth	Height	Approx. Weight (Lbs.)	Mtg Type W - Wall F - Floor	Wiring Diagram (Pages 276 - 288)
15	**NMF015XE**	NH6	23.90	25.00	28.75	190	F or W *	SCD 30
25	**NMF025XE**	NH6	23.90	25.00	28.75	240	F or W *	SCD 30
37.5	**NMF037XE**	NH6	23.90	25.00	28.75	300	F or W *	SCD 30
50	**NMF050XE**	NH3	26.00	25.00	38.00	390	F or W *	SCD 30
75	**NMF075XE**	NH3	26.00	25.00	38.00	540	F or W *	SCD 30
100	**NMF100XE**	NH4	32.00	29.50	41.00	700	F	SCD 30
150	**NMF150XE**			**CONSULT FACTORY**			F	SCD 30
167	**NMF167XE**			**CONSULT FACTORY**			F	SCD 30

For shielded units, please add the suffix "S" to the above part numbers.
*****Note: Meets DOE 10 CFR Part 431 and C802.2 at 60 Hz.***

*Wall mounting kit and/or drip plate kit required. Refer to pages 271 to 273 for details.

Note: For units smaller than 15kVA, please refer to the single phase encapsulated units in Section 8.

Products listed on this page are available as 'CE Mark' products. Please consult our sales office.

For termination details see page 275.

For accessories see pages 271 to 274.

© Hammond Power Solutions Inc.

Data subject to change without notice.

COPPER WOUND, SINGLE PHASE

208 Primary Volts 120/240 Secondary Volts 60 Hz

kVA	Catalog Number	Case Style (Pages 260 - 267)	Approx. Dimensions (Inches) Width	Depth	Height	Approx. Weight (Lbs.)	Mtg Type W - Wall F - Floor	Wiring Diagram (Pages 276 - 288)
15	**NMF015BEC**	NH5	19.40	20.20	21.50	180	F or W *	SCD 32
25	**NMF025BEC**	NH6	23.90	25.00	28.75	240	F or W *	SCD 31
37.5	**NMF037BEC**	NH6	23.90	25.00	28.75	300	F or W *	SCD 31
50	**NMF050BEC**	NH3	26.00	25.00	38.00	375	F or W *	SCD 2
75	**NMF075BEC**	NH3	26.00	25.00	38.00	525	F or W *	SCD 31
100	**NMF100BEC**	NH4	32.00	29.50	41.00	650	F	SCD 39
150	**NMF150BEC**	NJ4	32.00	32.50	50.00	900	F	SCD 39
167	**NMF167BEC**	NJ4	32.00	32.50	50.00	1000	F	SCD 39

For shielded units, please replace the suffix "C" with a 'K' on the above part numbers.

*Wall mounting kit and/or drip plate kit required. Refer to pages 271 to 273 for details.

240 X 480 Primary Volts 120/240 Secondary Volts 60 Hz

kVA	Catalog Number	Case Style (Pages 260 - 267)	Approx. Dimensions (Inches) Width	Depth	Height	Approx. Weight (Lbs.)	Mtg Type W - Wall F - Floor	Wiring Diagram (Pages 276 - 288)
15	**NMF015LEC**	NH5	19.40	20.20	21.50	180	F or W *	SCD 34
25	**NMF025LEC**	NH6	23.90	25.00	28.75	240	F or W *	SCD 17
37.5	**NMF037LEC**	NH6	23.90	25.00	28.75	300	F or W *	SCD 17
50	**NMF050LEC**	NH3	26.00	25.00	38.00	375	F or W *	SCD 17
75	**NMF075LEC**	NH3	26.00	25.00	38.00	525	F or W *	SCD 17
100	**NMF100LEC**	NH4	32.00	29.50	41.00	650	F	SCD 17
150	**NMF150LEC**	NJ4	32.00	32.50	50.00	900	F	SCD 17
167	**NMF167LEC**	NJ4	32.00	32.50	50.00	1000	F	SCD 17

For shielded units, please replace the suffix "C" with a 'K' on the above part numbers.

*Wall mounting kit and/or drip plate kit required. Refer to pages 271 to 273 for details.

277 Primary Volts 120/240 Secondary Volts 60 Hz

kVA	Catalog Number	Case Style (Pages 260 - 267)	Approx. Dimensions (Inches) Width	Depth	Height	Approx. Weight (Lbs.)	Mtg Type W - Wall F - Floor	Wiring Diagram (Pages 276 - 288)
15	**NMF015FEC**	NH5	19.40	20.20	21.50	180	F or W *	SCD 32
25	**NMF025FEC**	NH6	23.90	25.00	28.75	240	F or W *	SCD 31
37.5	**NMF037FEC**	NH6	23.90	25.00	28.75	300	F or W *	SCD 31
50	**NMF050FEC**	NH3	26.00	25.00	38.00	375	F or W *	SCD 31
75	**NMF075FEC**	NH3	26.00	25.00	38.00	525	F or W *	SCD 31
100	**NMF100FEC**	NH4	32.00	29.50	41.00	650	F	SCD 39
150	**NMF150FEC**	NJ4	32.00	32.50	50.00	900	F	SCD 39
167	**NMF167FEC**	NJ4	32.00	32.50	50.00	1000	F	SCD 39

For shielded units, please replace the suffix "C" with a 'K' on the above part numbers.

*Wall mounting kit and/or drip plate kit required. Refer to pages 271 to 273 for details.

Note: For units smaller than 15kVA, please refer to the single phase encapsulated units in Section 8.

Products listed on this page are available as 'CE Mark' products. Please consult our sales office.

For termination details see page 275.
For accessories see pages 271 to 274.

© Hammond Power Solutions Inc.
Data subject to change without notice.

COPPER WOUND, SINGLE PHASE

416 Primary Volts 120/240 Secondary Volts 60 Hz

kVA	Catalog Number	Case Style (Pages 260 - 267)	Approx. Dimensions (Inches) Width	Depth	Height	Approx. Weight (Lbs.)	Mtg Type W - Wall F - Floor	Wiring Diagram (Pages 276 - 288)
15	**NMF015HEC**	NH5	19.40	20.20	21.50	180	F or W *	SCD 32
25	**NMF025HEC**	NH6	23.90	25.00	28.75	240	F or W *	SCD 31
37.5	**NMF037HEC**	NH6	23.90	25.00	28.75	300	F or W *	SCD 31
50	**NMF050HEC**	NH3	26.00	25.00	38.00	375	F or W *	SCD 31
75	**NMF075HEC**	NH3	26.00	25.00	38.00	525	F or W *	SCD 31
100	**NMF100HEC**	NH4	32.00	29.50	41.00	650	F	SCD 39
150	**NMF150HEC**	NJ4	32.00	32.50	50.00	900	F	SCD 39
167	**NMF167HEC**	NJ4	32.00	32.50	50.00	1000	F	SCD 39

For shielded units, please replace the suffix "C" with a 'K' on the above part numbers.

*Wall mounting kit and/or drip plate kit required. Refer to pages 271 to 273 for details.

600 Primary Volts 120/240 Secondary Volts 60 Hz

kVA	Catalog Number	Case Style (Pages 260 - 267)	Approx. Dimensions (Inches) Width	Depth	Height	Approx. Weight (Lbs.)	Mtg Type W - Wall F - Floor	Wiring Diagram (Pages 276 - 288)
15	**NMF015PEC**	NH5	19.40	20.20	21.50	180	F or W *	SCD 32
25	**NMF025PEC**	NH6	23.90	25.00	28.75	240	F or W *	SCD 31
37.5	**NMF037PEC**	NH6	23.90	25.00	28.75	300	F or W *	SCD 31
50	**NMF050PEC**	NH3	26.00	25.00	38.00	375	F or W *	SCD 31
75	**NMF075PEC**	NH3	26.00	25.00	38.00	525	F or W *	SCD 31
100	**NMF100PEC**	NH4	32.00	29.50	41.00	650	F	SCD 39
150	**NMF150PEC**	NJ4	32.00	32.50	50.00	900	F	SCD 39
167	**NMF167PEC**	NJ4	32.00	32.50	50.00	1000	F	SCD 39

For shielded units, please replace the suffix "C" with a 'K' on the above part numbers.

*Wall mounting kit and/or drip plate kit required. Refer to pages 271 to 273 for details.

SINGLE PHASE, EXPORT MODEL

190/200/208/220 X 380/400/416/440 Primary Volts 120/240 Secondary Volts 50/60 Hz**

kVA	Catalog Number	Case Style (Pages 260 - 267)	Approx. Dimensions (Inches) Width	Depth	Height	Approx. Weight (Lbs.)	Mtg Type W - Wall F - Floor	Wiring Diagram (Pages 276 - 288)
15	**NMF015XEC**	NH6	23.90	25.00	28.75	190	F or W *	SCD 30
25	**NMF025XEC**	NH6	23.90	25.00	28.75	240	F or W *	SCD 30
37.5	**NMF037XEC**	NH6	23.90	25.00	28.75	300	F or W *	SCD 30
50	**NMF050XEC**	NH3	26.00	25.00	38.00	390	F or W *	SCD 30
75	**NMF075XEC**	NH3	26.00	25.00	38.00	540	F or W *	SCD 30
100	**NMF100XEC**	NH4	32.00	29.50	41.00	700	F	SCD 30
150	**NMF150XEC**			**CONSULT FACTORY**			F	SCD 30
167	**NMF167XEC**			**CONSULT FACTORY**			F	SCD 30

For shielded units, please add the suffix "S" to the above part numbers.
*****Note: Meets DOE 10 CFR Part 431 and C802.2 at 60 Hz.***

*Wall mounting kit and/or drip plate kit required. Refer to pages 271 to 273 for details.

Note: For units smaller than 15kVA, please refer to the single phase encapsulated units in Section 8.

Products listed on this page are available as 'CE Mark' products. Please consult our sales office.

For termination details see page 275.

For accessories see pages 271 to 274.

© Hammond Power Solutions Inc.

Data subject to change without notice.

HPS SENTINEL®

600 VOLT CLASS ENERGY EFFICIENT GENERAL PURPOSE DISTRIBUTION TRANSFORMER

ALUMINUM & COPPER, THREE PHASE STANDARD SPECIFICATIONS

15 to 45 kVA

75 to 750 kVA

	15 to 45 kVA	75 to 750 kVA
Efficiency	Meets DOE 10 CRF Part 431 & C802.2 efficiencies at 35% of rated load. Efficiencies are calculated under a linear load profile.	
UL Listed	File: E112313	File: E112313
CSA Certified	File: LR3902	File: LR3902
Frequency	60 Hz	60 Hz
Insulation System	220°C (150°C rise) 200°C (130°C rise) on 15 & 30kVA copper (optional 115°C and 80°C rise available)	220°C (150°C rise) (optional 115°C and 80°C rise available)
Enclosure Type	Heavy Duty Ventilated Type 3R Optional Type 4, 4X (stainless steel) and 12.	Heavy Duty Ventilated Type 3R Optional Type 4, 4X (stainless steel) and 12.
Enclosure Finish	ANSI 61 Grey, UL50	ANSI 61 Grey, UL50
Neutral	Neutral terminal for field connection (on applicable units).	Neutral terminal for field connection (on applicable units).
Standard Primary Taps	Refer to wiring diagrams for details.	Refer to wiring diagrams for details.
Termination	Front accessible separate high and low voltage terminals; connectors suitable for aluminum and copper are provided for easy cable installation.	Front accessible separate high and low voltage terminals; connectors suitable for aluminum and copper are provided for easy cable installation.
Conduit Knock-Outs	Standard on all units.	Standard on 75 kVA & 150 kVA units.
Impedance	Typically 2.5% to 6.5%	Typically 2.5% to 6.5%
Mounting	Floor or wall/ceiling mounting available. Refer to selection tables for details.	Floor or wall/ceiling mounting available. Refer to selection tables for details.
Seismic	Seismically certified in accordance with IBC 2009; Section 1613 Earthquake Loads, for S_{DS} <= 2.00g , z/h = 1.0, and I_P = 1.5	Seismically certified in accordance with IBC 2009; Section 1613 Earthquake Loads, for S_{DS} <= 2.00g , z/h = 1.0, and I_P = 1.5
Sound level	Meets NEMA ST-20 standards. **(Optional low noise units available)**	Meets NEMA ST-20 standards. **(Optional low noise units available)**

Other voltages and kVA sizes not listed in this section are available upon request for both aluminum and copper wound units. Features as listed above may differ. Please contact customer service for details, price and availability.

FOR TERMINATION DETAILS SEE PAGE 275.

FOR ACCESSORIES SEE PAGES 271 TO 274.

© Hammond Power Solutions Inc.
Data subject to change without notice.

ALUMINUM WOUND, THREE PHASE

208 Delta Primary Volts 208Y/120 Secondary Volts 60 Hz

kVA	Catalog Number	Case Style (Pages 260 - 267)	Approx. Dimensions (Inches) Width	Depth	Height	Approx. Weight (Lbs.)	Mtg Type W - Wall F - Floor	Wiring Diagram (Pages 276 - 288)
15	**NMK015BB**	NH5	19.40	20.20	21.50	200	F or W *	SCD 7
30	**NMK030BB**	NH6	23.90	25.00	28.75	280	F or W *	SCD 9
45	**NMK045BB**	NH6	23.90	25.00	28.75	375	F or W *	SCD 9
75	**NMK075BB**	NH3	26.00	25.00	38.00	540	F or W *	SCD 9
112.5	**NMK112BB**	NH3	26.00	25.00	38.00	775	F	SCD 9
150	**NMK150BB**	NH4	32.00	29.50	41.00	850	F	SCD 9
225	**NMK225BB**	NH4	32.00	29.50	41.00	1400	F	SCD 9
300	**NMK300BB**	NJ1	39.50	34.00	51.50	1700	F	SCD 9
500	**NMK500BB**	NJ2	48.50	38.40	59.00	2700	F	SCD 25
750	**NMK750BB**	NJ3	51.50	43.40	66.00	3250	F	SCD 25

For shielded units, please add the suffix "S" to the above part numbers.

*WALL MOUNTING KIT AND/OR DRIP PLATE KIT REQUIRED. REFER TO PAGES 271 TO 273 FOR DETAILS.

208 Delta Primary Volts 480Y/277 Secondary Volts 60 Hz

kVA	Catalog Number	Case Style (Pages 260 - 267)	Approx. Dimensions (Inches) Width	Depth	Height	Approx. Weight (Lbs.)	Mtg Type W - Wall F - Floor	Wiring Diagram (Pages 276 - 288)
15	**NMK015BK**	NH5	19.40	20.20	21.50	200	F or W *	SCD 40
30	**NMK030BK**	NH6	23.90	25.00	28.75	280	F or W *	SCD 26
45	**NMK045BK**	NH6	23.90	25.00	28.75	375	F or W *	SCD 26
75	**NMK075BK**	NH3	26.00	25.00	38.00	540	F or W *	SCD 26
112.5	**NMK112BK**	NH3	26.00	25.00	38.00	775	F	SCD 26
150	**NMK150BK**	NH4	32.00	29.50	41.00	850	F	SCD 26
225	**NMK225BK**	NH4	32.00	29.50	41.00	1400	F	SCD 26
300	**NMK300BK**	NJ1	39.50	34.00	51.50	1850	F	SCD 26
500	**NMK500BK**	NJ2	48.50	38.40	59.00	2700	F	SCD 23
750	**NMK750BK**	NJ3	51.50	43.40	66.00	3250	F	SCD 40

For shielded units, please add the suffix "S" to the above part numbers.

*WALL MOUNTING KIT AND/OR DRIP PLATE KIT REQUIRED. REFER TO PAGES 271 TO 273 FOR DETAILS.

240 Delta Primary Volts 208Y/120 Secondary Volts 60 Hz

kVA	Catalog Number	Case Style (Pages 260 - 267)	Approx. Dimensions (Inches) Width	Depth	Height	Approx. Weight (Lbs.)	Mtg Type W - Wall F - Floor	Wiring Diagram (Pages 276 - 288)
15	**NMK015DB**	NH5	19.40	20.20	21.50	200	F or W *	SCD 25
30	**NMK030DB**	NH6	23.90	25.00	28.75	280	F or W *	SCD 9
45	**NMK045DB**	NH6	23.90	25.00	28.75	375	F or W *	SCD 9
75	**NMK075DB**	NH3	26.00	25.00	38.00	540	F or W *	SCD 9
112.5	**NMK112DB**	NH3	26.00	25.00	38.00	775	F	SCD 9
150	**NMK150DB**	NH4	32.00	29.50	41.00	850	F	SCD 9
225	**NMK225DB**	NH4	32.00	29.50	41.00	1400	F	SCD 9
300	**NMK300DB**	NJ1	39.50	34.00	51.50	1700	F	SCD 9
500	**NMK500DB**	NJ2	48.50	38.40	59.00	2700	F	NO TAPS
750	**NMK750DB**	NJ3	51.50	43.40	66.00	3250	F	NO TAPS

For shielded units, please add the suffix "S" to the above part numbers.

*WALL MOUNTING KIT AND/OR DRIP PLATE KIT REQUIRED. REFER TO PAGES 271 TO 273 FOR DETAILS.

Note: For units smaller than 15kVA, please refer to the three phase encapsulated units in Section 8.

Products listed on this page are available as 'CE Mark' products. Please consult our sales office.

FOR TERMINATION DETAILS SEE PAGE 275.

FOR ACCESSORIES SEE PAGES 271 TO 274.

© Hammond Power Solutions Inc.

Data subject to change without notice.

ALUMINUM WOUND, THREE PHASE

240 Delta Primary Volts — 480Y/277 Secondary Volts — 60 Hz

kVA	Catalog Number	Case Style (Pages 260 - 267)	Approx. Dimensions (Inches) Width	Depth	Height	Approx. Weight (Lbs.)	Mtg Type W - Wall F - Floor	Wiring Diagram (Pages 276 - 288)
15	**NMK015DK**	NH5	19.40	20.20	21.50	200	F or W *	SCD 40
30	**NMK030DK**	NH6	23.90	25.00	28.75	280	F or W *	SCD 26
45	**NMK045DK**	NH6	23.90	25.00	28.75	375	F or W *	SCD 26
75	**NMK075DK**	NH3	26.00	25.00	38.00	540	F or W *	SCD 26
112.5	**NMK112DK**	NH3	26.00	25.00	38.00	775	F	SCD 26
150	**NMK150DK**	NH4	32.00	29.50	41.00	850	F	SCD 26
225	**NMK225DK**	NH4	32.00	29.50	41.00	1400	F	SCD 26
300	**NMK300DK**	NJ1	39.50	34.00	51.50	1700	F	SCD 26
500	**NMK500DK**	NJ2	48.50	38.40	59.00	2700	F	NO TAPS
750	**NMK750DK**	NJ3	51.50	43.40	66.00	3250	F	NO TAPS

For shielded units, please add the suffix "S" to the above part numbers.

*Wall mounting kit and/or drip plate kit required. Refer to pages 271 to 273 for details.

480 Delta Primary Volts — 208Y/120 Secondary Volts — 60 Hz

May be used on a 4 wire 480Y/277 Volt Supply

kVA	Catalog Number	Case Style (Pages 260 - 267)	Approx. Dimensions (Inches) Width	Depth	Height	Approx. Weight (Lbs.)	Mtg Type W - Wall F - Floor	Wiring Diagram (Pages 276 - 288)
15	**NMK015KB**	NH5	19.40	20.20	21.50	200	F or W *	SCD 7
30	**NMK030KB**	NH6	23.90	25.00	28.75	280	F or W *	SCD 19
45	**NMK045KB**	NH6	23.90	25.00	28.75	375	F or W *	SCD 19
75	**NMK075KB**	NH3	26.00	25.00	38.00	540	F or W *	SCD 19
112.5	**NMK112KB**	NH3	26.00	25.00	38.00	775	F	SCD 19
150	**NMK150KB**	NH4	32.00	29.50	41.00	850	F	SCD 19
225	**NMK225KB**	NH4	32.00	29.50	41.00	1400	F	SCD 19
300	**NMK300KB**	NJ1	39.50	34.00	51.50	1700	F	SCD 19
500	**NMK500KB**	NJ2	48.50	38.40	59.00	2150	F	SCD 20
750	**NMK750KB**	NJ3	51.50	43.40	66.00	3200	F	SCD 20

For shielded units, please add the suffix "S" to the above part numbers.

*Wall mounting kit and/or drip plate kit required. Refer to pages 271 to 273 for details.

480 Delta Primary Volts — 240 Delta/120 CT Secondary Volts — 60 Hz

May be used on a 4 wire 480Y/277 Volt Supply

kVA	Catalog Number	Case Style (Pages 260 - 267)	Approx. Dimensions (Inches) Width	Depth	Height	Approx. Weight (Lbs.)	Mtg Type W - Wall F - Floor	Wiring Diagram (Pages 276 - 288)
15	**NMK015KD**	NH5	19.40	20.20	21.50	200	F or W *	SCD 13
30	**NMK030KD**	NH6	23.90	25.00	28.75	280	F or W *	SCD 21
45	**NMK045KD**	NH6	23.90	25.00	28.75	375	F or W *	SCD 21
75	**NMK075KD**	NH3	26.00	25.00	38.00	540	F or W *	SCD 21
112.5	**NMK112KD**	NH3	26.00	25.00	38.00	775	F	SCD 21
150	**NMK150KD**	NH4	32.00	29.50	41.00	850	F	SCD 21
225	**NMK225KD**	NH4	32.00	29.50	41.00	1400	F	SCD 21
300	**NMK300KD**	NJ1	39.50	34.00	51.50	1700	F	SCD 21
500	**NMK500KD**	NJ2	48.50	38.40	59.00	2700	F	SCD 22
750	**NMK750KD**	NJ3	51.50	43.40	66.00	3250	F	SCD 22

For shielded units, please add the suffix "S" to the above part numbers.

*Wall mounting kit and/or drip plate kit required. Refer to pages 271 to 273 for details.

Note: For units smaller than 15kVA, please refer to the three phase encapsulated units in Section 8.

Products listed on this page are available as 'CE Mark' products. Please consult our sales office.

For termination details see page 275.
For accessories see pages 271 to 274.

© Hammond Power Solutions Inc.
Data subject to change without notice.

ALUMINUM WOUND, THREE PHASE

480 Delta Primary Volts 480Y/277 Secondary Volts 60 Hz

May be used on a 4 wire 480Y/277 Volt Supply

kVA	Catalog Number	Case Style (Pages 260 - 267)	Approx. Dimensions (Inches) Width	Depth	Height	Approx. Weight (Lbs.)	Mtg Type W - Wall F - Floor	Wiring Diagram (Pages 276 - 288)
15	**NMK015KK**	NH5	19.40	20.20	21.50	200	F or W *	SCD 25
30	**NMK030KK**	NH6	23.90	25.00	28.75	280	F or W *	SCD 19
45	**NMK045KK**	NH6	23.90	25.00	28.75	375	F or W *	SCD 19
75	**NMK075KK**	NH3	26.00	25.00	38.00	540	F or W *	SCD 19
112.5	**NMK112KK**	NH3	26.00	25.00	38.00	775	F	SCD 19
150	**NMK150KK**	NH4	32.00	29.50	41.00	850	F	SCD 19
225	**NMK225KK**	NH4	32.00	29.50	41.00	1400	F	SCD 19
300	**NMK300KK**	NJ1	39.50	34.00	51.50	1700	F	SCD 19
500	**NMK500KK**	NJ2	48.50	38.40	59.00	2700	F	SCD 20
750	**NMK750KK**	NJ3	51.50	43.40	66.00	3250	F	SCD 20

For shielded units, please add the suffix "S" to the above part numbers.

*WALL MOUNTING KIT AND/OR DRIP PLATE KIT REQUIRED. REFER TO PAGES 271 TO 273 FOR DETAILS.

600 Delta Primary Volts 208Y/120 Secondary Volts 60 Hz

May be used on a 4 wire 600Y/347 Volt Supply

kVA	Catalog Number	Case Style (Pages 260 - 267)	Approx. Dimensions (Inches) Width	Depth	Height	Approx. Weight (Lbs.)	Mtg Type W - Wall F - Floor	Wiring Diagram (Pages 276 - 288)
15	**NMK015PB**	NH5	19.40	20.20	21.50	200	F or W *	SCD 9
30	**NMK030PB**	NH6	23.90	25.00	28.75	280	F or W *	SCD 9
45	**NMK045PB**	NH6	23.90	25.00	28.75	375	F or W *	SCD 9
75	**NMK075PB**	NH3	26.00	25.00	38.00	540	F or W *	SCD 9
112.5	**NMK112PB**	NH3	26.00	25.00	38.00	775	F	SCD 9
150	**NMK150PB**	NH4	32.00	29.50	41.00	850	F	SCD 9
225	**NMK225PB**	NH4	32.00	29.50	41.00	1400	F	SCD 9
300	**NMK300PB**	NJ1	39.50	34.00	51.50	1700	F	SCD 9
500	**NMK500PB**	NJ2	48.50	38.40	59.00	2200	F	SCD 10
750	**NMK750PB**	NJ3	51.50	43.40	66.00	3250	F	SCD 10

For shielded units, please add the suffix "S" to the above part numbers.

*WALL MOUNTING KIT AND/OR DRIP PLATE KIT REQUIRED. REFER TO PAGES 271 TO 273 FOR DETAILS.

600Y Primary Volts 240 Delta Secondary Volts 60 Hz

Do not connect neutral when used on 600Y/347 Volt Supply

kVA	Catalog Number	Case Style (Pages 260 - 267)	Approx. Dimensions (Inches) Width	Depth	Height	Approx. Weight (Lbs.)	Mtg Type W - Wall F - Floor	Wiring Diagram (Pages 276 - 288)
15	**NMK015PD**	NH5	19.40	20.20	21.50	200	F or W *	SCD 16
30	**NMK030PD**	NH6	23.90	25.00	28.75	280	F or W *	SCD 16
45	**NMK045PD**	NH6	23.90	25.00	28.75	375	F or W *	SCD 16
75	**NMK075PD**	NH3	26.00	25.00	38.00	540	F or W *	SCD 16
112.5	**NMK112PD**	NH3	26.00	25.00	38.00	775	F	SCD 16
150	**NMK150PD**	NH4	32.00	29.50	41.00	850	F	SCD 16
225	**NMK225PD**	NH4	32.00	29.50	41.00	1400	F	SCD 16
300	**NMK300PD**	NJ1	39.50	34.00	51.50	1700	F	SCD 16
500	**NMK500PD**	NJ2	48.50	38.40	59.00	2700	F	SCD 29
750	**NMK750PD**	NJ3	51.50	43.40	66.00	3250	F	SCD 29

For shielded units, please add the suffix "S" to the above part numbers.

*WALL MOUNTING KIT AND/OR DRIP PLATE KIT REQUIRED. REFER TO PAGES 271 TO 273 FOR DETAILS.

Note: For units smaller than 15kVA, please refer to the three phase encapsulated units in Section 8.

Products listed on this page are available as 'CE Mark' products. Please consult our sales office.

FOR TERMINATION DETAILS SEE PAGE 275. FOR ACCESSORIES SEE PAGES 271 TO 274.

© Hammond Power Solutions Inc.

Data subject to change without notice.

ALUMINUM WOUND, THREE PHASE

600 Delta Primary Volts 480Y/277 Secondary Volts 60 Hz

May be used on a 4 wire 600Y/347 Volt Supply

kVA	Catalog Number	Case Style (Pages 260 - 267)	Approx. Dimensions (Inches) Width	Depth	Height	Approx. Weight (Lbs.)	Mtg Type W - Wall F - Floor	Wiring Diagram (Pages 276 - 288)
15	**NMK015PK**	NH5	19.40	20.20	21.50	200	F or W *	SCD 9
30	**NMK030PK**	NH6	23.90	25.00	28.75	280	F or W *	SCD 9
45	**NMK045PK**	NH6	23.90	25.00	28.75	375	F or W *	SCD 9
75	**NMK075PK**	NH3	26.00	25.00	38.00	540	F or W *	SCD 9
112.5	**NMK112PK**	NH3	26.00	25.00	38.00	775	F	SCD 9
150	**NMK150PK**	NH4	32.00	29.50	41.00	850	F	SCD 9
225	**NMK225PK**	NH4	32.00	29.50	41.00	1400	F	SCD 9
300	**NMK300PK**	NJ1	39.50	34.00	51.50	1700	F	SCD 9
500	**NMK500PK**	NJ2	48.50	38.40	59.00	2700	F	SCD 10
750	**NMK750PK**	NJ3	51.50	43.40	66.00	3250	F	SCD 10

For shielded units, please add the suffix "S" to the above part numbers.

*WALL MOUNTING KIT AND/OR DRIP PLATE KIT REQUIRED.
REFER TO PAGES 271 TO 273 FOR DETAILS.

Note: For units smaller than 15kVA, please refer to the three phase encapsulated units in Section 8.

Products listed on this page are available as 'CE Mark' products. Please consult our sales office.

FOR TERMINATION DETAILS SEE PAGE 275.

FOR ACCESSORIES SEE PAGES 271 TO 274.

© Hammond Power Solutions Inc.
Data subject to change without notice.

COPPER WOUND, THREE PHASE

208 Delta Primary Volts 208Y/120 Secondary Volts 60 Hz

kVA	Catalog Number	Case Style (Pages 260 - 267)	Approx. Dimensions (Inches) Width	Depth	Height	Approx. Weight (Lbs.)	Mtg Type W - Wall F - Floor	Wiring Diagram (Pages 276 - 288)
15	**NMK015BBCN**	NH5	19.40	20.20	21.50	200	F or W *	SCD 7
30	**NMK030BBC**	NH6	23.90	25.00	28.75	300	F or W *	SCD 9
45	**NMK045BBC**	NH6	23.90	25.00	28.75	400	F or W *	SCD 9
75	**NMK075BBC**	NH3	26.00	25.00	38.00	600	F or W *	SCD 9
112.5	**NMK112BBC**	NH3	26.00	25.00	38.00	850	F	SCD 9
150	**NMK150BBC**	NH4	32.00	29.50	41.00	975	F	SCD 9
225	**NMK225BBC**	NH4	32.00	29.50	41.00	1500	F	SCD 9
300	**NMK300BBC**	NJ1	39.50	34.00	51.50	1850	F	SCD 9
500	**NMK500BBC**	NJ2	48.50	38.40	59.00	2800	F	SCD 25
750	**NMK750BBC**	NJ3	51.50	43.40	66.00	3550	F	SCD 25

For shielded units, please replace the suffix "C" with "K" on the above part numbers.

*WALL MOUNTING KIT AND/OR DRIP PLATE KIT REQUIRED. REFER TO PAGES 271 TO 273 FOR DETAILS.

208 Delta Primary Volts 480Y/277 Secondary Volts 60 Hz

kVA	Catalog Number	Case Style (Pages 260 - 267)	Approx. Dimensions (Inches) Width	Depth	Height	Approx. Weight (Lbs.)	Mtg Type W - Wall F - Floor	Wiring Diagram (Pages 276 - 288)
15	**NMK015BKCN**	NH5	19.40	20.20	21.50	200	F or W *	SCD 40
30	**NMK030BKC**	NH6	23.90	25.00	28.75	300	F or W *	SCD 26
45	**NMK045BKC**	NH6	23.90	25.00	28.75	400	F or W *	SCD 26
75	**NMK075BKC**	NH3	26.00	25.00	38.00	600	F or W *	SCD 26
112.5	**NMK112BKC**	NH3	26.00	25.00	38.00	850	F	SCD 26
150	**NMK150BKC**	NH4	32.00	29.50	41.00	975	F	SCD 26
225	**NMK225BKC**	NH4	32.00	29.50	41.00	1500	F	SCD 26
300	**NMK300BKC**	NJ1	39.50	34.00	51.50	1850	F	SCD 26
500	**NMK500BKC**	NJ2	48.50	38.40	59.00	2800	F	SCD 23
750	**NMK750BKC**	NJ3	51.50	43.40	66.00	3550	F	SCD 23

For shielded units, please replace the suffix "C" with "K" on the above part numbers.

*WALL MOUNTING KIT AND/OR DRIP PLATE KIT REQUIRED. REFER TO PAGES 271 TO 273 FOR DETAILS.

240 Delta Primary Volts 208Y/120 Secondary Volts 60 Hz

kVA	Catalog Number	Case Style (Pages 260 - 267)	Approx. Dimensions (Inches) Width	Depth	Height	Approx. Weight (Lbs.)	Mtg Type W - Wall F - Floor	Wiring Diagram (Pages 276 - 288)
15	**NMK015DBCN**	NH5	19.40	20.20	21.50	200	F or W *	SCD 40
30	**NMK030DBC**	NH6	23.90	25.00	28.75	300	F or W *	SCD 9
45	**NMK045DBC**	NH6	23.90	25.00	28.75	400	F or W *	SCD 9
75	**NMK075DBC**	NH3	26.00	25.00	38.00	600	F or W *	SCD 9
112.5	**NMK112DBC**	NH3	26.00	25.00	38.00	850	F	SCD 9
150	**NMK150DBC**	NH4	32.00	29.50	41.00	975	F	SCD 9
225	**NMK225DBC**	NH4	32.00	29.50	41.00	1500	F	SCD 9
300	**NMK300DBC**	NJ1	39.50	34.00	51.50	1850	F	SCD 9
500	**NMK500DBC**	NJ2	48.50	38.40	59.00	2800	F	NO TAPS
750	**NMK750DBC**	NJ3	51.50	43.40	66.00	3550	F	NO TAPS

For shielded units, please replace the suffix "C" with "K" on the above part numbers.

*WALL MOUNTING KIT AND/OR DRIP PLATE KIT REQUIRED. REFER TO PAGES 271 TO 273 FOR DETAILS.

Note: For units smaller than 15kVA, please refer to the three phase encapsulated units in Section 8.

Products listed on this page are available as 'CE Mark' products. Please consult our sales office.

FOR TERMINATION DETAILS SEE PAGE 275. FOR ACCESSORIES SEE PAGES 271 TO 274.

© Hammond Power Solutions Inc.

Data subject to change without notice.

COPPER WOUND, THREE PHASE

240 Delta Primary Volts 480Y/277 Secondary Volts 60 Hz

kVA	Catalog Number	Case Style (Pages 260 - 267)	Approx. Dimensions (Inches) Width	Depth	Height	Approx. Weight (Lbs.)	Mtg Type W - Wall F - Floor	Wiring Diagram (Pages 276 - 288)
15	**NMK015DKCN**	NH5	19.40	20.20	21.50	200	F or W *	SCD 40
30	**NMK030DKC**	NH6	23.90	25.00	28.75	300	F or W *	SCD 26
45	**NMK045DKC**	NH6	23.90	25.00	28.75	400	F or W *	SCD 26
75	**NMK075DKC**	NH3	26.00	25.00	38.00	600	F or W *	SCD 26
112.5	**NMK112DKC**	NH3	26.00	25.00	38.00	850	F	SCD 26
150	**NMK150DKC**	NH4	32.00	29.50	41.00	975	F	SCD 26
225	**NMK225DKC**	NH4	32.00	29.50	41.00	1500	F	SCD 26
300	**NMK300DKC**	NJ1	39.50	34.00	51.50	1850	F	SCD 26
500	**NMK500DKC**	NJ2	48.50	38.40	59.00	2800	F	NO TAPS
750	**NMK750DKC**	NJ3	51.50	43.40	66.00	3550	F	NO TAPS

For shielded units, please replace the suffix "C" with "K" on the above part numbers.

*WALL MOUNTING KIT AND/OR DRIP PLATE KIT REQUIRED. REFER TO PAGES 271 TO 273 FOR DETAILS.

480 Delta Primary Volts 208Y/120 Secondary Volts 60 Hz

May be used on a 4 wire 480Y/277 Volt Supply

kVA	Catalog Number	Case Style (Pages 260 - 267)	Approx. Dimensions (Inches) Width	Depth	Height	Approx. Weight (Lbs.)	Mtg Type W - Wall F - Floor	Wiring Diagram (Pages 276 - 288)
15	**NMK015KBCN**	NH5	19.40	20.20	21.50	200	F or W *	SCD 7
30	**NMK030KBCN**	NH6	23.90	25.00	28.75	300	F or W *	SCD 19
45	**NMK045KBC**	NH6	23.90	25.00	28.75	400	F or W *	SCD 19
75	**NMK075KBC**	NH3	26.00	25.00	38.00	600	F or W *	SCD 19
112.5	**NMK112KBC**	NH3	26.00	25.00	38.00	850	F	SCD 19
150	**NMK150KBC**	NH4	32.00	29.50	41.00	975	F	SCD 19
225	**NMK225KBC**	NH4	32.00	29.50	41.00	1500	F	SCD 19
300	**NMK300KBC**	NJ1	39.50	34.00	51.50	1850	F	SCD 19
500	**NMK500KBC**	NJ2	48.50	38.40	59.00	2500	F	SCD 19
750	**NMK750KBC**	NJ3	51.50	43.40	66.00	3300	F	SCD 19

For shielded units, please replace the suffix "C" with "K" on the above part numbers.

*WALL MOUNTING KIT AND/OR DRIP PLATE KIT REQUIRED. REFER TO PAGES 271 TO 273 FOR DETAILS.

480 Delta Primary Volts 240 Delta/120 CT Secondary Volts 60 Hz

May be used on a 4 wire 480Y/277 Volt Supply

kVA	Catalog Number	Case Style (Pages 260 - 267)	Approx. Dimensions (Inches) Width	Depth	Height	Approx. Weight (Lbs.)	Mtg Type W - Wall F - Floor	Wiring Diagram (Pages 276 - 288)
15	**NMK015KDCN**	NH5	19.40	20.20	21.50	200	F or W *	SCD 13
30	**NMK030KDCN**	NH6	23.90	25.00	28.75	300	F or W *	SCD 21
45	**NMK045KDC**	NH6	23.90	25.00	28.75	400	F or W *	SCD 21
75	**NMK075KDC**	NH3	26.00	25.00	38.00	600	F or W *	SCD 21
112.5	**NMK112KDC**	NH3	26.00	25.00	38.00	850	F	SCD 21
150	**NMK150KDC**	NH4	32.00	29.50	41.00	975	F	SCD 21
225	**NMK225KDC**	NH4	32.00	29.50	41.00	1500	F	SCD 21
300	**NMK300KDC**	NJ1	39.50	34.00	51.50	1850	F	SCD 21
500	**NMK500KDC**	NJ2	48.50	38.40	59.00	2800	F	SCD 22
750	**NMK750KDC**	NJ3	51.50	43.40	66.00	3550	F	SCD 22

For shielded units, please replace the suffix "C" with "K" on the above part numbers.

*WALL MOUNTING KIT AND/OR DRIP PLATE KIT REQUIRED. REFER TO PAGES 271 TO 273 FOR DETAILS.

Note: For units smaller than 15kVA, please refer to the three phase encapsulated units in Section 8.

Products listed on this page are available as 'CE Mark' products. Please consult our sales office.

FOR TERMINATION DETAILS SEE PAGE 275.
FOR ACCESSORIES SEE PAGES 271 TO 274.

© Hammond Power Solutions Inc.
Data subject to change without notice.

COPPER WOUND, THREE PHASE

480 Delta Primary Volts 480Y/277 Secondary Volts 60 Hz

May be used on a 4 wire 480Y/277 Volt Supply

kVA	Catalog Number	Case Style (Pages 260 - 267)	Approx. Dimensions (Inches) Width	Depth	Height	Approx. Weight (Lbs.)	Mtg Type W - Wall F - Floor	Wiring Diagram (Pages 276 - 288)
15	**NMK015KKCN**	NH5	19.40	20.20	21.50	200	F or W *	SCD 25
30	**NMK030KKCN**	NH6	23.90	25.00	28.75	300	F or W *	SCD 19
45	**NMK045KKC**	NH6	23.90	25.00	28.75	400	F or W *	SCD 19
75	**NMK075KKC**	NH3	26.00	25.00	38.00	600	F or W *	SCD 19
112.5	**NMK112KKC**	NH3	26.00	25.00	38.00	850	F	SCD 19
150	**NMK150KKC**	NH4	32.00	29.50	41.00	975	F	SCD 19
225	**NMK225KKC**	NH4	32.00	29.50	41.00	1500	F	SCD 19
300	**NMK300KKC**	NJ1	39.50	34.00	51.50	1850	F	SCD 19
500	**NMK500KKC**	NJ2	48.50	38.40	59.00	2800	F	SCD 20
750	**NMK750KKC**	NJ3	51.50	43.40	66.00	3550	F	SCD 20

For shielded units, please replace the suffix "C" with "K" on the above part numbers.

*WALL MOUNTING KIT AND/OR DRIP PLATE KIT REQUIRED. REFER TO PAGES 271 TO 273 FOR DETAILS.

600 Delta Primary Volts 208Y/120 Secondary Volts 60 Hz

May be used on a 4 wire 600Y/347 Volt Supply

kVA	Catalog Number	Case Style (Pages 260 - 267)	Approx. Dimensions (Inches) Width	Depth	Height	Approx. Weight (Lbs.)	Mtg Type W - Wall F - Floor	Wiring Diagram (Pages 276 - 288)
15	**NMK015PBCN**	NH5	19.40	20.20	21.50	200	F or W *	SCD 9
30	**NMK030PBCN**	NH6	23.90	25.00	28.75	300	F or W *	SCD 9
45	**NMK045PBC**	NH6	23.90	25.00	28.75	400	F or W *	SCD 9
75	**NMK075PBC**	NH3	26.00	25.00	38.00	600	F or W *	SCD 9
112.5	**NMK112PBC**	NH3	26.00	25.00	38.00	850	F	SCD 9
150	**NMK150PBC**	NH4	32.00	29.50	41.00	975	F	SCD 9
225	**NMK225PBC**	NH4	32.00	29.50	41.00	1500	F	SCD 9
300	**NMK300PBC**	NJ1	39.50	34.00	51.50	1850	F	SCD 9
500	**NMK500PBC**	NJ2	48.50	38.40	59.00	2500	F	SCD 10
750	**NMK750PBC**	NJ3	51.50	43.40	66.00	3550	F	SCD 10

For shielded units, please replace the suffix "C" with "K" on the above part numbers.

*WALL MOUNTING KIT AND/OR DRIP PLATE KIT REQUIRED. REFER TO PAGES 271 TO 273 FOR DETAILS.

600Y Primary Volts 240 Delta Secondary Volts 60 Hz

Do not connect neutral when used on 600Y/347 Volt Supply

kVA	Catalog Number	Case Style (Pages 260 - 267)	Approx. Dimensions (Inches) Width	Depth	Height	Approx. Weight (Lbs.)	Mtg Type W - Wall F - Floor	Wiring Diagram (Pages 276 - 288)
15	**NMK015PDCN**	NH5	19.40	20.20	21.50	200	F or W *	SCD 16
30	**NMK030PDC**	NH6	23.90	25.00	28.75	300	F or W *	SCD 16
45	**NMK045PDC**	NH6	23.90	25.00	28.75	400	F or W *	SCD 16
75	**NMK075PDC**	NH3	26.00	25.00	38.00	600	F or W *	SCD 16
112.5	**NMK112PDC**	NH3	26.00	25.00	38.00	850	F	SCD 16
150	**NMK150PDC**	NH4	32.00	29.50	41.00	975	F	SCD 16
225	**NMK225PDC**	NH4	32.00	29.50	41.00	1500	F	SCD 16
300	**NMK300PDC**	NJ1	39.50	34.00	51.50	1850	F	SCD 16
500	**NMK500PDC**	NJ2	48.50	38.40	59.00	2800	F	SCD 29
750	**NMK750PDC**	NJ3	51.50	43.40	66.00	3550	F	SCD 29

For shielded units, please replace the suffix "C" with "K" on the above part numbers.

*WALL MOUNTING KIT AND/OR DRIP PLATE KIT REQUIRED. REFER TO PAGES 271 TO 273 FOR DETAILS.

Note: For units smaller than 15kVA, please refer to the three phase encapsulated units in Section 8.

Products listed on this page are available as 'CE Mark' products. Please consult our sales office.

FOR TERMINATION DETAILS SEE PAGE 275. FOR ACCESSORIES SEE PAGES 271 TO 274.

© Hammond Power Solutions Inc.

Data subject to change without notice.

COPPER WOUND, THREE PHASE

600 Delta Primary Volts 480Y/277 Secondary Volts 60 Hz

May be used on a 4 wire 600Y/347 Volt Supply

kVA	Catalog Number	Case Style (Pages 260 - 267)	Approx. Dimensions (Inches) Width	Depth	Height	Approx. Weight (Lbs.)	Mtg Type W - Wall F - Floor	Wiring Diagram (Pages 276 - 288)
15	**NMK015PKCN**	NH5	19.40	20.20	21.50	200	F or W *	SCD 9
30	**NMK030PKCN**	NH6	23.90	25.00	28.75	300	F or W *	SCD 9
45	**NMK045PKC**	NH6	23.90	25.00	28.75	400	F or W *	SCD 9
75	**NMK075PKC**	NH3	26.00	25.00	38.00	600	F or W *	SCD 9
112.5	**NMK112PKC**	NH3	26.00	25.00	38.00	850	F	SCD 9
150	**NMK150PKC**	NH4	32.00	29.50	41.00	975	F	SCD 9
225	**NMK225PKC**	NH4	32.00	29.50	41.00	1500	F	SCD 9
300	**NMK300PKC**	NJ1	39.50	34.00	51.50	1850	F	SCD 9
500	**NMK500PKC**	NJ2	48.50	38.40	59.00	2800	F	SCD 10
750	**NMK750PKC**	NJ3	51.50	43.40	66.00	3550	F	SCD 10

For shielded units, please replace the suffix "C" with "K" on the above part numbers.

*WALL MOUNTING KIT AND/OR DRIP PLATE KIT REQUIRED. REFER TO PAGES 271 TO 273 FOR DETAILS.

Note: For units smaller than 15kVA, please refer to the three phase encapsulated units in Section 8.

Products listed on this page are available as 'CE Mark' products. Please consult our sales office.

FOR TERMINATION DETAILS SEE PAGE 275.

FOR ACCESSORIES SEE PAGES 271 TO 274.

© Hammond Power Solutions Inc.
Data subject to change without notice.

HPS SuperSentinel®

600 VOLT CLASS ENERGY EFFICIENT GENERAL PURPOSE DISTRIBUTION TRANSFORMERS

General Purpose Distribution Transformer Efficiencies:

Energy efficient general purpose transformers are designed for linear loads and are most frequently used for applications such as commercial buildings which will supply and variety of general loads.

HPS SuperSentinel (part number prefix SMK or SMF)

- **Exceeds DOE 10 CFR Part 431** and (if applicable) **C802.2** efficiencies at **35%** of rated load.
- Efficiency performance will meet **NEMA Premium**® guidelines; **30% lower losses** than DOE 10 CFR Part 431 and (if applicable) CSA C802.2 efficiency standards; when measured under a linear load profile.
- Copper and Aluminum Available.

For termination details see page 275.

For accessories see pages 271 to 274.

© Hammond Power Solutions Inc.

Data subject to change without notice.

HPS SuperSentinel®

600 VOLT CLASS SUPER ENERGY EFFICIENT GENERAL PURPOSE DISTRIBUTION TRANSFORMER

ALUMINUM & COPPER, SINGLE PHASE STANDARD SPECIFICATIONS

NEMA® Premium

15 to 37.5 kVA

50 to 167 kVA

	15 to 37.5 kVA	50 to 167 kVA
Efficiency	Exceeds DOE 10 CFR Part 431 and C802.2 efficiencies at 35% of the rated load. Efficiency performance will meet the **NEMA Premium®** guidelines; **30% lower losses** than DOE 10 CFR Part 431 and (if applicable) C802.2 efficiency standards; when measured under a linear load profile.	
UL Listed	File: E112313	File: E112313
CSA Certified	File: LR3902	File: LR3902
Frequency	60 Hz	60 Hz
Insulation System	220°C (150°C rise) (optional 115°C and 80°C rise available)	220°C (150°C rise) (optional 115°C and 80°C rise available)
Enclosure Type	Heavy Duty Ventilated Type 3R Optional Type 4, 4X (stainless steel) and 12.	Heavy Duty Ventilated Type 3R Optional Type 4, 4X (stainless steel) and 12.
Enclosure Finish	ANSI 61 Grey, UL50	ANSI 61 Grey, UL50
Standard Primary Taps	Refer to wiring diagrams for details.	Refer to wiring diagrams for details.
Termination	Front accessible separate high and low voltage terminals; connectors suitable for aluminum and copper are provided for easy cable installation.	Front accessible separate high and low voltage terminals; connectors suitable for aluminum and copper are provided for easy cable installation.
Conduit Knock-Outs	Standard on all units.	Standard on 50 kVA, 75 kVA & 100 kVA units.
Impedance	Typically 2.5% to 6.5%	Typically 2.5% to 6.5%
Mounting	Floor or wall/ceiling mounting available. Refer to selection tables for details.	Floor or wall/ceiling mounting available. Refer to selection tables for details.
Sound level	Meets NEMA ST-20 standards. **(Optional low noise units available)**	Meets NEMA ST-20 standards. **(Optional low noise units available)**

Other voltages and kVA sizes not listed in this section are available upon request for both aluminum and copper wound units. Features as listed above may differ. Please contact customer service for details, price and availability.

For termination details see page 275.

For accessories see pages 271 to 274.

© Hammond Power Solutions Inc.
Data subject to change without notice.

ALUMINUM WOUND, SINGLE PHASE

NEMA Premium

208 Primary Volts 120/240 Secondary Volts 60 Hz

kVA	Catalog Number	Case Style (Pages 260 - 267)	Approx. Dimensions (Inches) Width	Depth	Height	Approx. Weight (Lbs.)	Mtg Type W - Wall F - Floor	Wiring Diagram (Pages 276 - 288)
15	**SMF015BE**	NH5	19.40	20.20	21.50	170	F or W *	SCD 32
25	**SMF025BE**	NH6	23.90	25.00	28.75	220	F or W *	SCD 31
37.5	**SMF037BE**	NH6	23.90	25.00	28.75	260	F or W *	SCD 31
50	**SMF050BE**	NH3	26.00	25.00	38.00	375	F or W *	SCD 2
75	**SMF075BE**	NH3	26.00	25.00	38.00	500	F or W *	SCD 31
100	**SMF100BE**	NH4	32.00	29.50	41.00	650	F	SCD 39
150	**SMF150BE**	NJ4	32.00	32.50	50.00	850	F	SCD 39
167	**SMF167BE**	NJ4	32.00	32.50	50.00	950	F	SCD 39

For shielded units, please add the suffix "S" to the above part numbers.

*Wall mounting kit and/or drip plate kit required. Refer to pages 271 to 273 for details.

240 X 480 Primary Volts 120/240 Secondary Volts 60 Hz

kVA	Catalog Number	Case Style (Pages 260 - 267)	Approx. Dimensions (Inches) Width	Depth	Height	Approx. Weight (Lbs.)	Mtg Type W - Wall F - Floor	Wiring Diagram (Pages 276 - 288)
15	**SMF015LE**	NH5	19.40	20.20	21.50	170	F or W *	SCD 34
25	**SMF025LE**	NH6	23.90	25.00	28.75	220	F or W *	SCD 17
37.5	**SMF037LE**	NH6	23.90	25.00	28.75	260	F or W *	SCD 17
50	**SMF050LE**	NH3	26.00	25.00	38.00	370	F or W *	SCD 17
75	**SMF075LE**	NH3	26.00	25.00	38.00	500	F or W *	SCD 17
100	**SMF100LE**	NH4	32.00	29.50	41.00	650	F	SCD 17
150	**SMF150LE**	NJ4	32.00	32.50	50.00	850	F	SCD 17
167	**SMF167LE**	NJ4	32.00	32.50	50.00	900	F	SCD 17

For shielded units, please add the suffix "S" to the above part numbers.

*Wall mounting kit and/or drip plate kit required. Refer to pages 271 to 273 for details.

277 Primary Volts 120/240 Secondary Volts 60 Hz

kVA	Catalog Number	Case Style (Pages 260 - 267)	Approx. Dimensions (Inches) Width	Depth	Height	Approx. Weight (Lbs.)	Mtg Type W - Wall F - Floor	Wiring Diagram (Pages 276 - 288)
15	**SMF015FE**	NH5	19.40	20.20	21.50	170	F or W *	SCD 32
25	**SMF025FE**	NH6	23.90	25.00	28.75	260	F or W *	SCD 31
37.5	**SMF037FE**	NH6	23.90	25.00	28.75	400	F or W *	SCD 31
50	**SMF050FE**	NH3	26.00	25.00	38.00	450	F or W *	SCD 31
75	**SMF075FE**	NH3	26.00	25.00	38.00	650	F or W *	SCD 31
100	**SMF100FE**	NH4	32.00	29.50	41.00	700	F	SCD 39
150	**SMF150FE**	NJ4	32.00	32.50	50.00	830	F	SCD 39
167	**SMF167FE**	NJ4	32.00	32.50	50.00	880	F	SCD 39

For shielded units, please add the suffix "S" to the above part numbers.

*Wall mounting kit and/or drip plate kit required. Refer to pages 271 to 273 for details.

Products listed on this page are available as 'CE Mark' products. Please consult our sales office.

© Hammond Power Solutions Inc.

Data subject to change without notice.

ALUMINUM WOUND, SINGLE PHASE

416 Primary Volts 120/240 Secondary Volts 60 Hz

kVA	Catalog Number	Case Style (Pages 260 - 267)	Approx. Dimensions (Inches) Width	Depth	Height	Approx. Weight (Lbs.)	Mtg Type W - Wall F - Floor	Wiring Diagram (Pages 276 - 288)
15	**SMF015HE**	NH5	19.40	20.20	21.50	220	F or W *	SCD 32
25	**SMF025HE**	NH6	23.90	25.00	28.75	220	F or W *	SCD 31
37.5	**SMF037HE**	NH6	23.90	25.00	28.75	260	F or W *	SCD 31
50	**SMF050HE**	NH3	26.00	25.00	38.00	400	F or W *	SCD 31
75	**SMF075HE**	NH3	26.00	25.00	38.00	480	F or W *	SCD 31
100	**SMF100HE**	NH4	32.00	29.50	41.00	650	F	SCD 39
150	**SMF150HE**	NJ4	32.00	32.50	50.00	850	F	SCD 39
167	**SMF167HE**	NJ4	32.00	32.50	50.00	900	F	SCD 39

For shielded units, please add the suffix "S" to the above part numbers.

*WALL MOUNTING KIT AND/OR DRIP PLATE KIT REQUIRED.
REFER TO PAGES 271 TO 273 FOR DETAILS.

600 Primary Volts 120/240 Secondary Volts 60 Hz

kVA	Catalog Number	Case Style (Pages 260 - 267)	Approx. Dimensions (Inches) Width	Depth	Height	Approx. Weight (Lbs.)	Mtg Type W - Wall F - Floor	Wiring Diagram (Pages 276 - 288)
15	**SMF015PE**	NH5	19.40	20.20	21.50	220	F or W *	SCD 32
25	**SMF025PE**	NH6	23.90	25.00	28.75	220	F or W *	SCD 31
37.5	**SMF037PE**	NH6	23.90	25.00	28.75	260	F or W *	SCD 31
50	**SMF050PE**	NH3	26.00	25.00	38.00	400	F or W *	SCD 31
75	**SMF075PE**	NH3	26.00	25.00	38.00	480	F or W *	SCD 31
100	**SMF100PE**	NH4	32.00	29.50	41.00	650	F	SCD 39
150	**SMF150PE**	NJ4	32.00	32.50	50.00	850	F	SCD 39
167	**SMF167PE**	NJ4	32.00	32.50	50.00	900	F	SCD 39

For shielded units, please add the suffix "S" to the above part numbers.

*WALL MOUNTING KIT AND/OR DRIP PLATE KIT REQUIRED.
REFER TO PAGES 271 TO 273 FOR DETAILS.

SINGLE PHASE, EXPORT MODEL

190/200/208/220 X 380/400/416/440 Primary Volts 120/240 Secondary Volts 50/60 Hz**

kVA	Catalog Number	Case Style (Pages 260 - 267)	Approx. Dimensions (Inches) Width	Depth	Height	Approx. Weight (Lbs.)	Mtg Type W - Wall F - Floor	Wiring Diagram (Pages 276 - 288)
15	**SMF015XE**	NH6	23.90	25.00	28.75	190	F or W *	SCD 30
25	**SMF025XE**	NH6	23.90	25.00	28.75	240	F or W *	SCD 30
37.5	**SMF037XE**	NH6	23.90	25.00	28.75	300	F or W *	SCD 30
50	**SMF050XE**	NH3	26.00	25.00	38.00	390	F or W *	SCD 30
75	**SMF075XE**	NH3	26.00	25.00	38.00	540	F or W *	SCD 30
100	**SMF100XE**	NH4	32.00	29.50	41.00	700	F	SCD 30
150	**SMF150XE**			**CONSULT FACTORY**			F	SCD 30
167	**SMF167XE**			**CONSULT FACTORY**			F	SCD 30

For shielded units, please add the suffix "S" to the above part numbers.
*****Note: Meets DOE 10 CFR Part 431 and C802.2 at 60 Hz.***

*WALL MOUNTING KIT AND/OR DRIP PLATE KIT REQUIRED.
REFER TO PAGES 271 TO 273 FOR DETAILS.

Products listed on this page are available as 'CE Mark' products. Please consult our sales office.

FOR TERMINATION DETAILS SEE PAGE 275.
FOR ACCESSORIES SEE PAGES 271 TO 274.

© Hammond Power Solutions Inc.
Data subject to change without notice.

COPPER WOUND, SINGLE PHASE

208 Primary Volts 120/240 Secondary Volts 60 Hz

kVA	Catalog Number	Case Style (Pages 260 - 267)	Approx. Dimensions (Inches) Width	Depth	Height	Approx. Weight (Lbs.)	Mtg Type W - Wall F - Floor	Wiring Diagram (Pages 276 - 288)
15	**SMF015BEC**	NH5	19.40	20.20	21.50	180	F or W *	SCD 32
25	**SMF025BEC**	NH6	23.90	25.00	28.75	240	F or W *	SCD 31
37.5	**SMF037BEC**	NH6	23.90	25.00	28.75	300	F or W *	SCD 31
50	**SMF050BEC**	NH3	26.00	25.00	38.00	375	F or W *	SCD 31
75	**SMF075BEC**	NH3	26.00	25.00	38.00	525	F or W *	SCD 6
100	**SMF100BEC**	NH4	32.00	29.50	41.00	650	F	SCD 6
150	**SMF150BEC**	NJ4	32.00	32.50	50.00	900	F	SCD 6
167	**SMF167BEC**	NJ4	32.00	32.50	50.00	1000	F	SCD 6

For shielded units, please replace the suffix "C" with a 'K' on the above part numbers.

*Wall mounting kit and/or drip plate kit required. Refer to pages 271 to 273 for details.

240 X 480 Primary Volts 120/240 Secondary Volts 60 Hz

kVA	Catalog Number	Case Style (Pages 260 - 267)	Approx. Dimensions (Inches) Width	Depth	Height	Approx. Weight (Lbs.)	Mtg Type W - Wall F - Floor	Wiring Diagram (Pages 276 - 288)
15	**SMF015LEC**	NH5	19.40	20.20	21.50	180	F or W *	SCD 34
25	**SMF025LEC**	NH6	23.90	25.00	28.75	240	F or W *	SCD 17
37.5	**SMF037LEC**	NH6	23.90	25.00	28.75	300	F or W *	SCD 17
50	**SMF050LEC**	NH3	26.00	25.00	38.00	375	F or W *	SCD 17
75	**SMF075LEC**	NH3	26.00	25.00	38.00	525	F or W *	SCD 17
100	**SMF100LEC**	NH4	32.00	29.50	41.00	650	F	SCD 17
150	**SMF150LEC**	NJ4	32.00	32.50	50.00	900	F	SCD 17
167	**SMF167LEC**	NJ4	32.00	32.50	50.00	1000	F	SCD 17

For shielded units, please replace the suffix "C" with a 'K' on the above part numbers.

*Wall mounting kit and/or drip plate kit required. Refer to pages 271 to 273 for details.

277 Primary Volts 120/240 Secondary Volts 60 Hz

kVA	Catalog Number	Case Style (Pages 260 - 267)	Approx. Dimensions (Inches) Width	Depth	Height	Approx. Weight (Lbs.)	Mtg Type W - Wall F - Floor	Wiring Diagram (Pages 276 - 288)
15	**SMF015FEC**	NH5	19.40	20.20	21.50	180	F or W *	SCD 32
25	**SMF025FEC**	NH6	23.90	25.00	28.75	240	F or W *	SCD 31
37.5	**SMF037FEC**	NH6	23.90	25.00	28.75	300	F or W *	SCD 31
50	**SMF050FEC**	NH3	26.00	25.00	38.00	375	F or W *	SCD 31
75	**SMF075FEC**	NH3	26.00	25.00	38.00	525	F or W *	SCD 6
100	**SMF100FEC**	NH4	32.00	29.50	41.00	650	F	SCD 6
150	**SMF150FEC**	NJ4	32.00	32.50	50.00	900	F	SCD 6
167	**SMF167FEC**	NJ4	32.00	32.50	50.00	1000	F	SCD 6

For shielded units, please replace the suffix "C" with a 'K' on the above part numbers.

*Wall mounting kit and/or drip plate kit required. Refer to pages 271 to 273 for details.

Products listed on this page are available as 'CE Mark' products. Please consult our sales office.

For termination details see page 275.

For accessories see pages 271 to 274.

© Hammond Power Solutions Inc.

Data subject to change without notice.

COPPER WOUND, SINGLE PHASE

416 Primary Volts 120/240 Secondary Volts 60 Hz

kVA	Catalog Number	Case Style (Pages 260 - 267)	Approx. Dimensions (Inches) Width	Depth	Height	Approx. Weight (Lbs.)	Mtg Type W - Wall F - Floor	Wiring Diagram (Pages 276 - 288)
15	**SMF015HEC**	NH5	19.40	20.20	21.50	180	F or W *	SCD 32
25	**SMF025HEC**	NH6	23.90	25.00	28.75	240	F or W *	SCD 31
37.5	**SMF037HEC**	NH6	23.90	25.00	28.75	300	F or W *	SCD 31
50	**SMF050HEC**	NH3	26.00	25.00	38.00	375	F or W *	SCD 31
75	**SMF075HEC**	NH3	26.00	25.00	38.00	525	F or W *	SCD 6
100	**SMF100HEC**	NH4	32.00	29.50	41.00	650	F	SCD 6
150	**SMF150HEC**	NJ4	32.00	32.50	50.00	900	F	SCD 6
167	**SMF167HEC**	NJ4	32.00	32.50	50.00	1000	F	SCD 6

For shielded units, please replace the suffix "C" with a 'K' on the above part numbers.

*Wall mounting kit and/or drip plate kit required. Refer to pages 271 to 273 for details.

600 Primary Volts 120/240 Secondary Volts 60 Hz

kVA	Catalog Number	Case Style (Pages 260 - 267)	Approx. Dimensions (Inches) Width	Depth	Height	Approx. Weight (Lbs.)	Mtg Type W - Wall F - Floor	Wiring Diagram (Pages 276 - 288)
15	**SMF015PEC**	NH5	19.40	20.20	21.50	180	F or W *	SCD 32
25	**SMF025PEC**	NH6	23.90	25.00	28.75	240	F or W *	SCD 31
37.5	**SMF037PEC**	NH6	23.90	25.00	28.75	300	F or W *	SCD 31
50	**SMF050PEC**	NH3	26.00	25.00	38.00	375	F or W *	SCD 31
75	**SMF075PEC**	NH3	26.00	25.00	38.00	525	F or W *	SCD 6
100	**SMF100PEC**	NH4	32.00	29.50	41.00	650	F	SCD 6
150	**SMF150PEC**	NJ4	32.00	32.50	50.00	900	F	SCD 6
167	**SMF167PEC**	NJ4	32.00	32.50	50.00	1000	F	SCD 6

For shielded units, please replace the suffix "C" with a 'K' on the above part numbers.

*Wall mounting kit and/or drip plate kit required. Refer to pages 271 to 273 for details.

SINGLE PHASE, EXPORT MODEL

190/200/208/220 X 380/400/416/440 Primary Volts 120/240 Secondary Volts 50/60 Hz**

kVA	Catalog Number	Case Style (Pages 260 - 267)	Approx. Dimensions (Inches) Width	Depth	Height	Approx. Weight (Lbs.)	Mtg Type W - Wall F - Floor	Wiring Diagram (Pages 276 - 288)
15	**SMF015XEC**	NH6	23.90	25.00	28.75	190	F or W *	SCD 30
25	**SMF025XEC**	NH6	23.90	25.00	28.75	240	F or W *	SCD 30
37.5	**SMF037XEC**	NH6	23.90	25.00	28.75	300	F or W *	SCD 30
50	**SMF050XEC**	NH3	26.00	25.00	38.00	390	F or W *	SCD 30
75	**SMF075XEC**	NH3	26.00	25.00	38.00	540	F or W *	SCD 30
100	**SMF100XEC**	NH4	32.00	29.50	41.00	700	F	SCD 30
150	**SMF150XEC**			**CONSULT FACTORY**			F	SCD 30
167	**SMF167XEC**			**CONSULT FACTORY**			F	SCD 30

For shielded units, please add the suffix "S" to the above part numbers.
*****Note: Meets DOE 10 CFR Part 431 and C802.2 at 60 Hz.***

*Wall mounting kit and/or drip plate kit required. Refer to pages 271 to 273 for details.

Products listed on this page are available as 'CE Mark' products. Please consult our sales office.

For termination details see page 275.
For accessories see pages 271 to 274.

© Hammond Power Solutions Inc.
Data subject to change without notice.

HPS SuperSentinel®
600 VOLT CLASS SUPER ENERGY EFFICIENT GENERAL PURPOSE DISTRIBUTION TRANSFORMER
ALUMINUM & COPPER, THREE PHASE STANDARD SPECIFICATIONS

NEMA Premium

15 to 45 kVA

75 to 750 kVA

	15 to 45 kVA	75 to 750 kVA
Efficiency	Exceeds DOE 10 CFR Part 431 and C802.2 efficiencies at 35% of the rated load. Efficiency performance will meet the **NEMA Premium®** guidelines; **30% lower losses** than DOE 10 CFR Part 431 and (if applicable) C802.2 efficiency standards; when measured under a linear load profile.	
UL Listed	File: E112313	File: E112313
CSA Certified	File: LR3902	File: LR3902
Frequency	60 Hz	60 Hz
Insulation System	220°C (150°C rise) 200°C (130°C rise) on 15 & 30kVA copper (optional 115°C and 80°C rise available)	220°C (150°C rise) (optional 115°C and 80°C rise available)
Enclosure Type	Heavy Duty Ventilated Type 3R Optional Type 4, 4X (stainless steel) and 12.	Heavy Duty Ventilated Type 3R Optional Type 4, 4X (stainless steel) and 12.
Enclosure Finish	ANSI 61 Grey, UL50	ANSI 61 Grey, UL50
Neutral	Neutral terminal for field connection (on applicable units).	Neutral terminal for field connection (on applicable units).
Standard Primary Taps	Refer to wiring diagrams for details.	Refer to wiring diagrams for details.
Termination	Front accessible separate high and low voltage terminals; connectors suitable for aluminum and copper are provided for easy cable installation.	Front accessible separate high and low voltage terminals; connectors suitable for aluminum and copper are provided for easy cable installation.
Conduit Knock-Outs	Standard on all units.	Standard on 75 kVA & 150 kVA units.
Impedance	Typically 2.5% to 6.5%	Typically 2.5% to 6.5%
Mounting	Floor or wall/ceiling mounting available. Refer to selection tables for details.	Floor or wall/ceiling mounting available. Refer to selection tables for details.
Sound level	Meets NEMA ST-20 standards. **(Optional low noise units available)**	Meets NEMA ST-20 standards. **(Optional low noise units available)**

Other voltages and kVA sizes not listed in this section are available upon request for both aluminum and copper wound units. Features as listed above may differ. Please contact customer service for details, price and availability.

For termination details see page 275.

For accessories see pages 271 to 274.

© Hammond Power Solutions Inc.

Data subject to change without notice.

ALUMINUM WOUND, THREE PHASE

208 Delta Primary Volts 208Y/120 Secondary Volts 60 Hz

kVA	Catalog Number	Case Style (Pages 260 - 267)	Approx. Dimensions (Inches) Width	Depth	Height	Approx. Weight (Lbs.)	Mtg Type W - Wall F - Floor	Wiring Diagram (Pages 276 - 288)
15	**SMK015BB**	NH5	19.40	20.20	21.50	250	F or W *	SCD 7
30	**SMK030BB**	NH6	23.90	25.00	28.75	350	F or W *	SCD 9
45	**SMK045BB**	NH3	26.00	25.00	38.00	460	F or W *	SCD 9
75	**SMK075BB**	NH3	26.00	25.00	38.00	650	F or W *	SCD 9
112.5	**SMK112BB**	NH4	32.00	29.50	41.00	960	F	SCD 9
150	**SMK150BB**	NH4	32.00	29.50	41.00	1210	F	SCD 9
225	**SMK225BB**	NH4	32.00	29.50	41.00	1970	F	SCD 9
300	**SMK300BB**	NJ1	39.50	34.00	51.50	2590	F	SCD 9
500	**SMK500BB**	NJ2	48.50	38.40	59.00	4450	F	SCD 25
750	**SMK750BB**	NJ3	51.50	43.40	66.00	6250	F	SCD 25

For shielded units, please add the suffix "S" to the above part numbers.

*WALL MOUNTING KIT AND/OR DRIP PLATE KIT REQUIRED.
REFER TO PAGES 271 TO 273 FOR DETAILS.

208 Delta Primary Volts 480Y/277 Secondary Volts 60 Hz

kVA	Catalog Number	Case Style (Pages 260 - 267)	Approx. Dimensions (Inches) Width	Depth	Height	Approx. Weight (Lbs.)	Mtg Type W - Wall F - Floor	Wiring Diagram (Pages 276 - 288)
15	**SMK015BK**	NH5	19.40	20.20	21.50	250	F or W *	SCD 40
30	**SMK030BK**	NH6	23.90	25.00	28.75	350	F or W *	SCD 26
45	**SMK045BK**	NH3	26.00	25.00	38.00	460	F or W *	SCD 26
75	**SMK075BK**	NH3	26.00	25.00	38.00	650	F or W *	SCD 26
112.5	**SMK112BK**	NH4	32.00	29.50	41.00	960	F	SCD 26
150	**SMK150BK**	NH4	32.00	29.50	41.00	1210	F	SCD 26
225	**SMK225BK**	NH4	32.00	29.50	41.00	1970	F	SCD 26
300	**SMK300BK**	NJ1	39.50	34.00	51.50	2590	F	SCD 26
500	**SMK500BK**	NJ2	48.50	38.40	59.00	4450	F	SCD 23
750	**SMK750BK**	NJ3	51.50	43.40	66.00	6250	F	SCD 40

For shielded units, please add the suffix "S" to the above part numbers.

*WALL MOUNTING KIT AND/OR DRIP PLATE KIT REQUIRED.
REFER TO PAGES 271 TO 273 FOR DETAILS.

240 Delta Primary Volts 208Y/120 Secondary Volts 60 Hz

kVA	Catalog Number	Case Style (Pages 260 - 267)	Approx. Dimensions (Inches) Width	Depth	Height	Approx. Weight (Lbs.)	Mtg Type W - Wall F - Floor	Wiring Diagram (Pages 276 - 288)
15	**SMK015DB**	NH5	19.40	20.20	21.50	250	F or W *	SCD 25
30	**SMK030DB**	NH6	23.90	25.00	28.75	350	F or W *	SCD 9
45	**SMK045DB**	NH3	26.00	25.00	38.00	460	F or W *	SCD 9
75	**SMK075DB**	NH3	26.00	25.00	38.00	650	F or W *	SCD 9
112.5	**SMK112DB**	NH4	32.00	29.50	41.00	960	F	SCD 9
150	**SMK150DB**	NH4	32.00	29.50	41.00	1210	F	SCD 9
225	**SMK225DB**	NH4	32.00	29.50	41.00	1970	F	SCD 9
300	**SMK300DB**	NJ1	39.50	34.00	51.50	2590	F	SCD 9
500	**SMK500DB**	NJ2	48.50	38.40	59.00	4450	F	NO TAPS
750	**SMK750DB**	NJ3	51.50	43.40	66.00	6250	F	NO TAPS

For shielded units, please add the suffix "S" to the above part numbers.

*WALL MOUNTING KIT AND/OR DRIP PLATE KIT REQUIRED.
REFER TO PAGES 271 TO 273 FOR DETAILS.

Products listed on this page are available as 'CE Mark' products. Please consult our sales office.

FOR TERMINATION DETAILS SEE PAGE 275.
FOR ACCESSORIES SEE PAGES 271 TO 274.

© Hammond Power Solutions Inc.
Data subject to change without notice.

ALUMINUM WOUND, THREE PHASE

NEMA Premium

240 Delta Primary Volts 480Y/277 Secondary Volts 60 Hz

kVA	Catalog Number	Case Style (Pages 260 - 267)	Approx. Dimensions (Inches) Width	Depth	Height	Approx. Weight (Lbs.)	Mtg Type W - Wall F - Floor	Wiring Diagram (Pages 276 - 288)
15	**SMK015DK**	NH5	19.40	20.20	21.50	250	F or W *	SCD 40
30	**SMK030DK**	NH6	23.90	25.00	28.75	350	F or W *	SCD 26
45	**SMK045DK**	NH3	26.00	25.00	38.00	460	F or W *	SCD 26
75	**SMK075DK**	NH3	26.00	25.00	38.00	650	F or W *	SCD 26
112.5	**SMK112DK**	NH4	32.00	29.50	41.00	960	F	SCD 26
150	**SMK150DK**	NH4	32.00	29.50	41.00	1210	F	SCD 26
225	**SMK225DK**	NH4	32.00	29.50	41.00	1970	F	SCD 26
300	**SMK300DK**	NJ1	39.50	34.00	51.50	2590	F	SCD 26
500	**SMK500DK**	NJ2	48.50	38.40	59.00	4450	F	NO TAPS
750	**SMK750DK**	NJ3	51.50	43.40	66.00	6250	F	NO TAPS

For shielded units, please add the suffix "S" to the above part numbers.

*Wall mounting kit and/or drip plate kit required. Refer to pages 271 to 273 for details.

480 Delta Primary Volts 208Y/120 Secondary Volts 60 Hz

May be used on a 4 wire 480Y/277 Volt Supply

kVA	Catalog Number	Case Style (Pages 260 - 267)	Approx. Dimensions (Inches) Width	Depth	Height	Approx. Weight (Lbs.)	Mtg Type W - Wall F - Floor	Wiring Diagram (Pages 276 - 288)
15	**SMK015KB**	NH5	19.40	20.20	21.50	250	F or W *	SCD 7
30	**SMK030KB**	NH6	23.90	25.00	28.75	350	F or W *	SCD 19
45	**SMK045KB**	NH3	26.00	25.00	38.00	460	F or W *	SCD 19
75	**SMK075KB**	NH3	26.00	25.00	38.00	650	F or W *	SCD 19
112.5	**SMK112KB**	NH4	32.00	29.50	41.00	960	F	SCD 19
150	**SMK150KB**	NH4	32.00	29.50	41.00	1210	F	SCD 19
225	**SMK225KB**	NH4	32.00	29.50	41.00	1970	F	SCD 19
300	**SMK300KB**	NJ1	39.50	34.00	51.50	2590	F	SCD 19
500	**SMK500KB**	NJ2	48.50	38.40	59.00	4450	F	SCD 20
750	**SMK750KB**	NJ3	51.50	43.40	66.00	6250	F	SCD 20

For shielded units, please add the suffix "S" to the above part numbers.

*Wall mounting kit and/or drip plate kit required. Refer to pages 271 to 273 for details.

480 Delta Primary Volts 240 Delta/120 CT Secondary Volts 60 Hz

May be used on a 4 wire 480Y/277 Volt Supply

kVA	Catalog Number	Case Style (Pages 260 - 267)	Approx. Dimensions (Inches) Width	Depth	Height	Approx. Weight (Lbs.)	Mtg Type W - Wall F - Floor	Wiring Diagram (Pages 276 - 288)
15	**SMK015KD**	NH5	19.40	20.20	21.50	250	F or W *	SCD 13
30	**SMK030KD**	NH6	23.90	25.00	28.75	350	F or W *	SCD 21
45	**SMK045KD**	NH3	26.00	25.00	38.00	460	F or W *	SCD 21
75	**SMK075KD**	NH3	26.00	25.00	38.00	650	F or W *	SCD 21
112.5	**SMK112KD**	NH4	32.00	29.50	41.00	960	F	SCD 21
150	**SMK150KD**	NH4	32.00	29.50	41.00	1210	F	SCD 21
225	**SMK225KD**	NH4	32.00	29.50	41.00	1970	F	SCD 21
300	**SMK300KD**	NJ1	39.50	34.00	51.50	2590	F	SCD 21
500	**SMK500KD**	NJ2	48.50	38.40	59.00	4450	F	SCD 22
750	**SMK750KD**	NJ3	51.50	43.40	66.00	6250	F	SCD 22

For shielded units, please add the suffix "S" to the above part numbers.

*Wall mounting kit and/or drip plate kit required. Refer to pages 271 to 273 for details.

Products listed on this page are available as 'CE Mark' products. Please consult our sales office.

SECTION 7

For termination details see page 275.

For accessories see pages 271 to 274.

© Hammond Power Solutions Inc.

Data subject to change without notice.

ALUMINUM WOUND, THREE PHASE

480 Delta Primary Volts — 480Y/277 Secondary Volts — 60 Hz

May be used on a 4 wire 480Y/277 Volt Supply

kVA	Catalog Number	Case Style (Pages 260 - 267)	Approx. Dimensions (Inches) Width	Depth	Height	Approx. Weight (Lbs.)	Mtg Type W - Wall F - Floor	Wiring Diagram (Pages 276 - 288)
15	**SMK015KK**	NH5	19.40	20.20	21.50	250	F or W *	SCD 25
30	**SMK030KK**	NH6	23.90	25.00	28.75	350	F or W *	SCD 19
45	**SMK045KK**	NH3	26.00	25.00	38.00	460	F or W *	SCD 19
75	**SMK075KK**	NH3	26.00	25.00	38.00	650	F or W *	SCD 19
112.5	**SMK112KK**	NH4	32.00	29.50	41.00	960	F	SCD 19
150	**SMK150KK**	NH4	32.00	29.50	41.00	1210	F	SCD 19
225	**SMK225KK**	NH4	32.00	29.50	41.00	1970	F	SCD 19
300	**SMK300KK**	NJ1	39.50	34.00	51.50	2590	F	SCD 19
500	**SMK500KK**	NJ2	48.50	38.40	59.00	4450	F	SCD 20
750	**SMK750KK**	NJ3	51.50	43.40	66.00	6250	F	SCD 20

For shielded units, please add the suffix "S" to the above part numbers.

*Wall mounting kit and/or drip plate kit required. Refer to pages 271 to 273 for details.

600 Delta Primary Volts — 208Y/120 Secondary Volts — 60 Hz

May be used on a 4 wire 600Y/347 Volt Supply

kVA	Catalog Number	Case Style (Pages 260 - 267)	Approx. Dimensions (Inches) Width	Depth	Height	Approx. Weight (Lbs.)	Mtg Type W - Wall F - Floor	Wiring Diagram (Pages 276 - 288)
15	**SMK015PB**	NH5	19.40	20.20	21.50	250	F or W *	SCD 9
30	**SMK030PB**	NH6	23.90	25.00	28.75	350	F or W *	SCD 9
45	**SMK045PB**	NH3	26.00	25.00	38.00	460	F or W *	SCD 9
75	**SMK075PB**	NH3	26.00	25.00	38.00	650	F or W *	SCD 9
112.5	**SMK112PB**	NH4	32.00	29.50	41.00	960	F	SCD 9
150	**SMK150PB**	NH4	32.00	29.50	41.00	1210	F	SCD 9
225	**SMK225PB**	NH4	32.00	29.50	41.00	1970	F	SCD 9
300	**SMK300PB**	NJ1	39.50	34.00	51.50	2590	F	SCD 9
500	**SMK500PB**	NJ2	48.50	38.40	59.00	4450	F	SCD 10
750	**SMK750PB**	NJ3	51.50	43.40	66.00	6250	F	SCD 10

For shielded units, please add the suffix "S" to the above part numbers.

*Wall mounting kit and/or drip plate kit required. Refer to pages 271 to 273 for details.

600Y Primary Volts — 240 Delta Secondary Volts — 60 Hz

Do not connect neutral when used on 600Y/347 Volt Supply

kVA	Catalog Number	Case Style (Pages 260 - 267)	Approx. Dimensions (Inches) Width	Depth	Height	Approx. Weight (Lbs.)	Mtg Type W - Wall F - Floor	Wiring Diagram (Pages 276 - 288)
15	**SMK015PD**	NH5	19.40	20.20	21.50	250	F or W *	SCD 16
30	**SMK030PD**	NH6	23.90	25.00	28.75	350	F or W *	SCD 16
45	**SMK045PD**	NH3	26.00	25.00	38.00	460	F or W *	SCD 16
75	**SMK075PD**	NH3	26.00	25.00	38.00	650	F or W *	SCD 16
112.5	**SMK112PD**	NH4	32.00	29.50	41.00	960	F	SCD 16
150	**SMK150PD**	NH4	32.00	29.50	41.00	1210	F	SCD 16
225	**SMK225PD**	NH4	32.00	29.50	41.00	1970	F	SCD 16
300	**SMK300PD**	NJ1	39.50	34.00	51.50	2590	F	SCD 16
500	**SMK500PD**	NJ2	48.50	38.40	59.00	4450	F	SCD 29
750	**SMK750PD**	NJ3	51.50	43.40	66.00	6250	F	SCD 29

For shielded units, please add the suffix "S" to the above part numbers.

*Wall mounting kit and/or drip plate kit required. Refer to pages 271 to 273 for details.

Products listed on this page are available as 'CE Mark' products. Please consult our sales office.

For termination details see page 275.
For accessories see pages 271 to 274.

© Hammond Power Solutions Inc.
Data subject to change without notice.

ALUMINUM WOUND, THREE PHASE

600 Delta Primary Volts 480Y/277 Secondary Volts 60 Hz

May be used on a 4 wire 600Y/347 Volt Supply

kVA	Catalog Number	Case Style (Pages 260 - 267)	Approx. Dimensions (Inches) Width	Depth	Height	Approx. Weight (Lbs.)	Mtg Type W - Wall F - Floor	Wiring Diagram (Pages 276 - 288)
15	**SMK015PK**	NH5	19.40	20.20	21.50	250	F or W *	SCD 9
30	**SMK030PK**	NH6	23.90	25.00	28.75	350	F or W *	SCD 9
45	**SMK045PK**	NH3	26.00	25.00	38.00	460	F or W *	SCD 9
75	**SMK075PK**	NH3	26.00	25.00	38.00	650	F or W *	SCD 9
112.5	**SMK112PK**	NH4	32.00	29.50	41.00	960	F	SCD 9
150	**SMK150PK**	NH4	32.00	29.50	41.00	1210	F	SCD 9
225	**SMK225PK**	NH4	32.00	29.50	41.00	1970	F	SCD 9
300	**SMK300PK**	NJ1	39.50	34.00	51.50	2590	F	SCD 9
500	**SMK500PK**	NJ2	48.50	38.40	59.00	4450	F	SCD 10
750	**SMK750PK**	NJ3	51.50	43.40	66.00	6250	F	SCD 10

For shielded units, please add the suffix "S" to the above part numbers.

*WALL MOUNTING KIT AND/OR DRIP PLATE KIT REQUIRED. REFER TO PAGES 271 TO 273 FOR DETAILS.

Products listed on this page are available as 'CE Mark' products. Please consult our sales office.

FOR TERMINATION DETAILS SEE PAGE 275.

FOR ACCESSORIES SEE PAGES 271 TO 274.

© Hammond Power Solutions Inc.

Data subject to change without notice.

COPPER WOUND, THREE PHASE

NEMA Premium

208 Delta Primary Volts 208Y/120 Secondary Volts 60 Hz

kVA	Catalog Number	Case Style (Pages 260 - 267)	Approx. Dimensions (Inches) Width	Depth	Height	Approx. Weight (Lbs.)	Mtg Type W - Wall F - Floor	Wiring Diagram (Pages 276 - 288)
15	**SMK015BBCN**	NH5	19.40	20.20	21.50	250	F or W *	SCD 7
30	**SMK030BBC**	NH6	23.90	25.00	28.75	390	F or W *	SCD 9
45	**SMK045BBC**	NH6	23.90	25.00	28.75	460	F or W *	SCD 9
75	**SMK075BBC**	NH3	26.00	25.00	38.00	660	F or W *	SCD 9
112.5	**SMK112BBC**	NH4	32.00	29.50	41.00	1000	F	SCD 9
150	**SMK150BBC**	NH4	32.00	29.50	41.00	1250	F	SCD 9
225	**SMK225BBC**	NJ1	39.50	34.00	51.50	1960	F	SCD 9
300	**SMK300BBC**	NJ2	48.50	38.40	59.00	2470	F	SCD 9
500	**SMK500BBC**	NJ3	51.50	43.40	66.00	3930	F	SCD 25
750	**SMK750BBC**	NJ6	64.00	57.40	71.00	5750	F	SCD 25

For shielded units, please replace the suffix "C" with "K" on the above part numbers.

*Wall mounting kit and/or drip plate kit required. Refer to pages 271 to 273 for details.

208 Delta Primary Volts 480Y/277 Secondary Volts 60 Hz

kVA	Catalog Number	Case Style (Pages 260 - 267)	Approx. Dimensions (Inches) Width	Depth	Height	Approx. Weight (Lbs.)	Mtg Type W - Wall F - Floor	Wiring Diagram (Pages 276 - 288)
15	**SMK015BKCN**	NH5	19.40	20.20	21.50	250	F or W *	SCD 40
30	**SMK030BKC**	NH6	23.90	25.00	28.75	390	F or W *	SCD 26
45	**SMK045BKC**	NH6	23.90	25.00	28.75	460	F or W *	SCD 26
75	**SMK075BKC**	NH3	26.00	25.00	38.00	660	F or W *	SCD 26
112.5	**SMK112BKC**	NH4	32.00	29.50	41.00	1000	F	SCD 26
150	**SMK150BKC**	NH4	32.00	29.50	41.00	1250	F	SCD 26
225	**SMK225BKC**	NJ1	39.50	34.00	51.50	1960	F	SCD 26
300	**SMK300BKC**	NJ2	48.50	38.40	59.00	2470	F	SCD 26
500	**SMK500BKC**	NJ3	51.50	43.40	66.00	3930	F	SCD 23
750	**SMK750BKC**	NJ6	64.00	57.40	71.00	5750	F	SCD 40

For shielded units, please replace the suffix "C" with "K" on the above part numbers.

*Wall mounting kit and/or drip plate kit required. Refer to pages 271 to 273 for details.

240 Delta Primary Volts 208Y/120 Secondary Volts 60 Hz

kVA	Catalog Number	Case Style (Pages 260 - 267)	Approx. Dimensions (Inches) Width	Depth	Height	Approx. Weight (Lbs.)	Mtg Type W - Wall F - Floor	Wiring Diagram (Pages 276 - 288)
15	**SMK015DBCN**	NH5	19.40	20.20	21.50	250	F or W *	SCD 25
30	**SMK030DBC**	NH6	23.90	25.00	28.75	390	F or W *	SCD 9
45	**SMK045DBC**	NH6	23.90	25.00	28.75	460	F or W *	SCD 9
75	**SMK075DBC**	NH3	26.00	25.00	38.00	660	F or W *	SCD 9
112.5	**SMK112DBC**	NH4	32.00	29.50	41.00	1000	F	SCD 9
150	**SMK150DBC**	NH4	32.00	29.50	41.00	1250	F	SCD 9
225	**SMK225DBC**	NJ1	39.50	34.00	51.50	1960	F	SCD 9
300	**SMK300DBC**	NJ2	48.50	38.40	59.00	2470	F	SCD 9
500	**SMK500DBC**	NJ3	51.50	43.40	66.00	3930	F	NO TAPS
750	**SMK750DBC**	NJ6	64.00	57.40	71.00	5750	F	NO TAPS

For shielded units, please replace the suffix "C" with "K" on the above part numbers.

*Wall mounting kit and/or drip plate kit required. Refer to pages 271 to 273 for details.

Products listed on this page are available as 'CE Mark' products. Please consult our sales office.

For termination details see page 275.
For accessories see pages 271 to 274.

© Hammond Power Solutions Inc.
Data subject to change without notice.

COPPER WOUND, THREE PHASE

NEMA Premium

240 Delta Primary Volts 480Y/277 Secondary Volts 60 Hz

kVA	Catalog Number	Case Style (Pages 260 - 267)	Approx. Dimensions (Inches) Width	Depth	Height	Approx. Weight (Lbs.)	Mtg Type W - Wall F - Floor	Wiring Diagram (Pages 276 - 288)
15	**SMK015DKCN**	NH5	19.40	20.20	21.50	250	F or W *	SCD 40
30	**SMK030DKC**	NH6	23.90	25.00	28.75	390	F or W *	SCD 26
45	**SMK045DKC**	NH6	23.90	25.00	28.75	460	F or W *	SCD 26
75	**SMK075DKC**	NH3	26.00	25.00	38.00	660	F or W *	SCD 26
112.5	**SMK112DKC**	NH4	32.00	29.50	41.00	1000	F	SCD 26
150	**SMK150DKC**	NH4	32.00	29.50	41.00	1250	F	SCD 26
225	**SMK225DKC**	NJ1	39.50	34.00	51.50	1960	F	SCD 26
300	**SMK300DKC**	NJ2	48.50	38.40	59.00	2470	F	SCD 26
500	**SMK500DKC**	NJ3	51.50	43.40	66.00	3930	F	NO TAPS
750	**SMK750DKC**	NJ6	64.00	57.40	71.00	5750	F	NO TAPS

For shielded units, please replace the suffix "C" with "K" on the above part numbers.

*WALL MOUNTING KIT AND/OR DRIP PLATE KIT REQUIRED. REFER TO PAGES 271 TO 273 FOR DETAILS.

480 Delta Primary Volts 208Y/120 Secondary Volts 60 Hz

May be used on a 4 wire 480Y/277 Volt Supply

kVA	Catalog Number	Case Style (Pages 260 - 267)	Approx. Dimensions (Inches) Width	Depth	Height	Approx. Weight (Lbs.)	Mtg Type W - Wall F - Floor	Wiring Diagram (Pages 276 - 288)
15	**SMK015KBCN**	NH5	19.40	20.20	21.50	250	F or W *	SCD 7
30	**SMK030KBCN**	NH6	23.90	25.00	28.75	390	F or W *	SCD 19
45	**SMK045KBC**	NH6	23.90	25.00	28.75	460	F or W *	SCD 19
75	**SMK075KBC**	NH3	26.00	25.00	38.00	660	F or W *	SCD 19
112.5	**SMK112KBC**	NH4	32.00	29.50	41.00	1000	F	SCD 19
150	**SMK150KBC**	NH4	32.00	29.50	41.00	1250	F	SCD 19
225	**SMK225KBC**	NJ1	39.50	34.00	51.50	1960	F	SCD 19
300	**SMK300KBC**	NJ2	48.50	38.40	59.00	2470	F	SCD 19
500	**SMK500KBC**	NJ3	51.50	43.40	66.00	3930	F	SCD 19
750	**SMK750KBC**	NJ6	64.00	57.40	71.00	5750	F	SCD 19

For shielded units, please replace the suffix "C" with "K" on the above part numbers.

*WALL MOUNTING KIT AND/OR DRIP PLATE KIT REQUIRED. REFER TO PAGES 271 TO 273 FOR DETAILS.

480 Delta Primary Volts 240 Delta/120 CT Secondary Volts 60 Hz

May be used on a 4 wire 480Y/277 Volt Supply

kVA	Catalog Number	Case Style (Pages 260 - 267)	Approx. Dimensions (Inches) Width	Depth	Height	Approx. Weight (Lbs.)	Mtg Type W - Wall F - Floor	Wiring Diagram (Pages 276 - 288)
15	**SMK015KDCN**	NH5	19.40	20.20	21.50	250	F or W *	SCD 13
30	**SMK030KDCN**	NH6	23.90	25.00	28.75	390	F or W *	SCD 21
45	**SMK045KDC**	NH6	23.90	25.00	28.75	460	F or W *	SCD 21
75	**SMK075KDC**	NH3	26.00	25.00	38.00	660	F or W *	SCD 21
112.5	**SMK112KDC**	NH4	32.00	29.50	41.00	1000	F	SCD 21
150	**SMK150KDC**	NH4	32.00	29.50	41.00	1250	F	SCD 21
225	**SMK225KDC**	NJ1	39.50	34.00	51.50	1960	F	SCD 21
300	**SMK300KDC**	NJ2	48.50	38.40	59.00	2470	F	SCD 21
500	**SMK500KDC**	NJ3	51.50	43.40	66.00	3930	F	SCD 22
750	**SMK750KDC**	NJ6	64.00	57.40	71.00	5750	F	SCD 22

For shielded units, please replace the suffix "C" with "K" on the above part numbers.

*WALL MOUNTING KIT AND/OR DRIP PLATE KIT REQUIRED. REFER TO PAGES 271 TO 273 FOR DETAILS.

Products listed on this page are available as 'CE Mark' products. Please consult our sales office.

FOR TERMINATION DETAILS SEE PAGE 275.

FOR ACCESSORIES SEE PAGES 271 TO 274.

© Hammond Power Solutions Inc.

Data subject to change without notice.

COPPER WOUND, THREE PHASE

480 Delta Primary Volts — 480Y/277 Secondary Volts — 60 Hz

May be used on a 4 wire 480Y/277 Volt Supply

kVA	Catalog Number	Case Style (Pages 260 - 267)	Approx. Dimensions (Inches) Width	Depth	Height	Approx. Weight (Lbs.)	Mtg Type W - Wall F - Floor	Wiring Diagram (Pages 276 - 288)
15	**SMK015KKCN**	NH5	19.40	20.20	21.50	250	F or W *	SCD 25
30	**SMK030KKCN**	NH6	23.90	25.00	28.75	390	F or W *	SCD 19
45	**SMK045KKC**	NH6	23.90	25.00	28.75	460	F or W *	SCD 19
75	**SMK075KKC**	NH3	26.00	25.00	38.00	660	F or W *	SCD 19
112.5	**SMK112KKC**	NH4	32.00	29.50	41.00	1000	F	SCD 19
150	**SMK150KKC**	NH4	32.00	29.50	41.00	1250	F	SCD 19
225	**SMK225KKC**	NJ1	39.50	34.00	51.50	1960	F	SCD 19
300	**SMK300KKC**	NJ2	48.50	38.40	59.00	2470	F	SCD 19
500	**SMK500KKC**	NJ3	51.50	43.40	66.00	3930	F	SCD 20
750	**SMK750KKC**	NJ6	64.00	57.40	71.00	5750	F	SCD 20

For shielded units, please replace the suffix "C" with "K" on the above part numbers.

*Wall mounting kit and/or drip plate kit required. Refer to pages 271 to 273 for details.

600 Delta Primary Volts — 208Y/120 Secondary Volts — 60 Hz

May be used on a 4 wire 600Y/347 Volt Supply

kVA	Catalog Number	Case Style (Pages 260 - 267)	Approx. Dimensions (Inches) Width	Depth	Height	Approx. Weight (Lbs.)	Mtg Type W - Wall F - Floor	Wiring Diagram (Pages 276 - 288)
15	**SMK015PBCN**	NH5	19.40	20.20	21.50	250	F or W *	SCD 9
30	**SMK030PBCN**	NH6	23.90	25.00	28.75	390	F or W *	SCD 9
45	**SMK045PBC**	NH6	23.90	25.00	28.75	460	F or W *	SCD 9
75	**SMK075PBC**	NH3	26.00	25.00	38.00	660	F or W *	SCD 9
112.5	**SMK112PBC**	NH4	32.00	29.50	41.00	1000	F	SCD 9
150	**SMK150PBC**	NH4	32.00	29.50	41.00	1250	F	SCD 9
225	**SMK225PBC**	NJ1	39.50	34.00	51.50	1960	F	SCD 9
300	**SMK300PBC**	NJ2	48.50	38.40	59.00	2470	F	SCD 9
500	**SMK500PBC**	NJ3	51.50	43.40	66.00	3930	F	SCD 10
750	**SMK750PBC**	NJ6	64.00	57.40	71.00	5750	F	SCD 10

For shielded units, please replace the suffix "C" with "K" on the above part numbers.

*Wall mounting kit and/or drip plate kit required. Refer to pages 271 to 273 for details.

600Y Primary Volts — 240 Delta Secondary Volts — 60 Hz

Do not connect neutral when used on 600Y/347 Volt Supply

kVA	Catalog Number	Case Style (Pages 260 - 267)	Approx. Dimensions (Inches) Width	Depth	Height	Approx. Weight (Lbs.)	Mtg Type W - Wall F - Floor	Wiring Diagram (Pages 276 - 288)
15	**SMK015PDCN**	NH5	19.40	20.20	21.50	250	F or W *	SCD 16
30	**SMK030PDC**	NH6	23.90	25.00	28.75	390	F or W *	SCD 16
45	**SMK045PDC**	NH6	23.90	25.00	28.75	460	F or W *	SCD 16
75	**SMK075PDC**	NH3	26.00	25.00	38.00	660	F or W *	SCD 16
112.5	**SMK112PDC**	NH4	32.00	29.50	41.00	1000	F	SCD 16
150	**SMK150PDC**	NH4	32.00	29.50	41.00	1250	F	SCD 16
225	**SMK225PDC**	NJ1	39.50	34.00	51.50	1960	F	SCD 16
300	**SMK300PDC**	NJ2	48.50	38.40	59.00	2470	F	SCD 16
500	**SMK500PDC**	NJ3	51.50	43.40	66.00	3930	F	SCD 29
750	**SMK750PDC**	NJ6	64.00	57.40	71.00	5750	F	SCD 29

For shielded units, please replace the suffix "C" with "K" on the above part numbers.

*Wall mounting kit and/or drip plate kit required. Refer to pages 271 to 273 for details.

Products listed on this page are available as 'CE Mark' products. Please consult our sales office.

For termination details see page 275.

For accessories see pages 271 to 274.

© Hammond Power Solutions Inc.
Data subject to change without notice.

COPPER WOUND, THREE PHASE

600 Delta Primary Volts 480Y/277 Secondary Volts 60 Hz

May be used on a 4 wire 600Y/347 Volt Supply

kVA	Catalog Number	Case Style (Pages 260 - 267)	Approx. Dimensions (Inches) Width	Depth	Height	Approx. Weight (Lbs.)	Mtg Type W - Wall F - Floor	Wiring Diagram (Pages 276 - 288)
15	**SMK015PKCN**	NH5	19.40	20.20	21.50	250	F or W *	SCD 9
30	**SMK030PKCN**	NH6	23.90	25.00	28.75	390	F or W *	SCD 9
45	**SMK045PKC**	NH6	23.90	25.00	28.75	460	F or W *	SCD 9
75	**SMK075PKC**	NH3	26.00	25.00	38.00	660	F or W *	SCD 9
112.5	**SMK112PKC**	NH4	32.00	29.50	41.00	1000	F	SCD 9
150	**SMK150PKC**	NH4	32.00	29.50	41.00	1250	F	SCD 9
225	**SMK225PKC**	NJ1	39.50	34.00	51.50	1960	F	SCD 9
300	**SMK300PKC**	NJ2	48.50	38.40	59.00	2470	F	SCD 9
500	**SMK500PKC**	NJ3	51.50	43.40	66.00	3930	F	SCD 10
750	**SMK750PKC**	NJ6	64.00	57.40	71.00	5750	F	SCD 10

For shielded units, please replace the suffix "C" with "K" on the above part numbers.

*WALL MOUNTING KIT AND/OR DRIP PLATE KIT REQUIRED. REFER TO PAGES 271 TO 273 FOR DETAILS.

Products listed on this page are available as 'CE Mark' products. Please consult our sales office.

FOR TERMINATION DETAILS SEE PAGE 275.

FOR ACCESSORIES SEE PAGES 271 TO 274.

© Hammond Power Solutions Inc.

Data subject to change without notice.

HPS SYNERGY® Series

600V CLASS ENERGY EFFICIENT K-FACTOR TRANSFORMER

The use of electronic equipment has continued to proliferate in both offices and industrial plants. These electronic devices are powered by either switching power supplies or a rectifier circuit. Examples of these devices include computers, fax machines, copiers, printers, cash registers, UPS's and solid-state ballasts. They all contribute to the distortion of the current waveform and the generation of harmonics.

HARMONICS AND NON-LINEAR LOADS

Harmonics, in an electrical system, are currents created by non-linear loads that generate non-sinusoidal (non-linear) current waveforms. These current and voltage waveforms operate on frequencies that are in multiples of the fundamental 60 hertz frequency. That is, the fundamental frequency is at 60 hertz, the 2nd harmonic is at 120 hertz frequency (60 x 2), the 3rd at 180 hertz, and so forth.

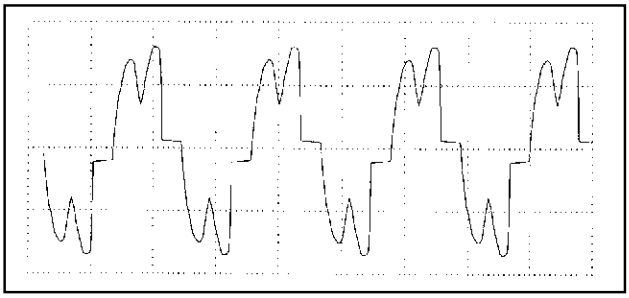

An example of harmonics

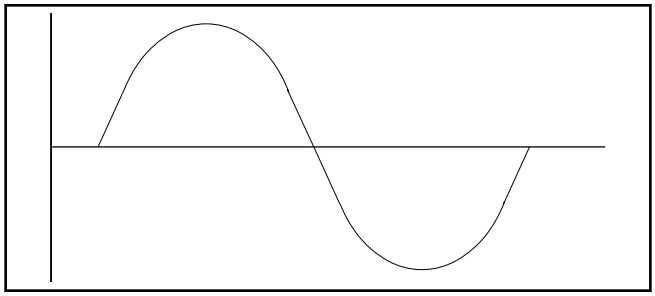

An example of a perfect waveform

Harmonics are principally the by-product of switch-mode power supply technology where AC is rectified to DC, and back again. In the process, a capacitor is charged in the first half-cycle and then discharged in the next half-cycle in supplying current to the load. This cycle is repeated. This action of recharging causes AC current to flow only during a portion of the AC voltage wave in abrupt pulses. These abrupt pulses distort the fundamental wave shape causing distortion to the various harmonic frequencies.

Non-Linear Loads

Today, non-linear loads make up the majority of all electrical demand. Rectified input, switching power supplies and electronic lighting ballasts are the most common single phase non-linear loads. Harmonic currents and voltages produced by single phase, non-linear loads which are connected phase-to-neutral in a three phase four wire system, are third order, zero sequence harmonics (the third harmonic and its odd multiples - 3rd, 9th, 15th, 21st, etc., phasors displaced by zero degrees). These third order, zero sequence harmonic currents do not cancel, but add up arithmetically on the neutral bus, creating a primary source of excessive neutral current.

FOR ACCESSORIES SEE PAGES 271 TO 274.

© Hammond Power Solutions Inc.
Data subject to change without notice.

HPS SYNERGY® Series

600V CLASS ENERGY EFFICIENT K-FACTOR TRANSFORMER continued...

Energy efficient general purpose distribution transformers, most frequently used for applications such as commercial or institutional buildings, will supply widely varied single phase loads. Energy Efficient K-Factor transformers are energy efficient general purpose transformers, but are designed to tolerate the harmonic distortion associated with these loads.

Harmonics indicate their presence in a number of ways:

- Overheating
- Device malfunctions
- Telephone interference
- Equipment vibration
- Breakers tripping

Harmonics For A 60Hz System

In a 60 Hz power system, the fundamental and harmonic frequencies are outlined in the table below.

Fundamental	60 Hz
2nd Harmonic	120 Hz
3rd Harmonic	180 Hz
4th Harmonic	240 Hz
5th Harmonic	300 Hz
6th Harmonic	360 Hz
7th Harmonic	420 Hz
8th Harmonic	480 Hz
9th Harmonic	540 Hz
10th Harmonic	600 Hz
11th Harmonic	660 Hz
12th Harmonic	720 Hz
13th Harmonic	780 Hz

14th Harmonic	840 Hz
15th Harmonic	900 Hz
16th Harmonic	9600 Hz
17th Harmonic	1020 Hz
18th Harmonic	1080 Hz
19th Harmonic	1140 Hz
20th Harmonic	1200 Hz
21st Harmonic	1260 Hz
22nd Harmonic	1320 Hz
23rd Harmonic	1380 Hz
24th Harmonic	1440 Hz
25th Harmonic	1500 Hz

K-Factor

K-factor is defined as a ratio between the additional losses due to harmonics and the eddy current losses at 60Hz. It is used to specify transformers for non-linear loads. Transformers with a rated K-factor of 4, 7, 13, 20 and 30 are available. For balanced loading, a transformer with a K-factor of 4 should be specified when no more than 50% of the total load is non-linear. A transformer with K-factor 13 should be specified when 100% of the load is non-linear.

For accessories see pages 271 to 274.

© Hammond Power Solutions Inc.
Data subject to change without notice.

HPS SYNERGY®

600 VOLT CLASS ENERGY EFFICIENT K-FACTOR TRANSFORMERS

K-Factor Transformer Efficiencies:

HPS SYNERGY (PART NUMBER PREFIX NMT)

Energy efficient k-factor transformers are designed to tolerate heating due to harmonics associated with non-linear loads. Harmonics can indicate their presence in a number of ways: overheating, device malfunctions; telephone interference; equipment vibration; and breakers tripping.

- Meets **DOE 10 CFR Part 431** and **C802.2** efficiencies at **35%** of rated load.
- Efficiencies are calculated under a **linear load profile**.
- Copper and Aluminum Available.

FOR ACCESSORIES SEE PAGES 271 TO 274.

© Hammond Power Solutions Inc.

Data subject to change without notice.

HPS SYNERGY®
600V CLASS ENERGY EFFICIENT K-FACTOR TRANSFORMERS

ALUMINUM & COPPER, THREE PHASE STANDARD SPECIFICATIONS

15 to 45 kVA

75 to 750 kVA

	15 to 45 kVA	75 to 750 kVA
Efficiency	Meets DOE 10 CFR Part 431 & C802.2 efficiencies at 35% of rated load. Efficiencies are calculated under a linear load profile.	
UL Listed	File: E112313	File: E112313
CSA Certified	File: LR3902	File: LR3902
Frequency	60 Hz	60 Hz
Insulation System	220°C (150°C rise) 200°C (130°C rise) on 15 & 30kVA copper (optional 115°C and 80°C rise available)	220°C (150°C rise) (optional 115°C and 80°C rise available)
Electrostatic Shield	60dB Common Mode - typical	60dB Common Mode - typical
Enclosure Type	Heavy Duty Ventilated Type 3R Optional Type 4, 4X (stainless steel) and 12.	Heavy Duty Ventilated Type 3R Optional Type 4, 4X (stainless steel) and 12.
Enclosure Finish	ANSI 61 Grey, UL50	ANSI 61 Grey, UL50
Neutral	Neutral terminal for field connection (on applicable units).	Neutral terminal for field connection (on applicable units).
Standard Primary Taps	Refer to wiring diagrams for details.	Refer to wiring diagrams for details.
Termination	Front accessible separate high and low voltage terminals; connectors suitable for aluminum and copper are provided for easy cable installation.	Front accessible separate high and low voltage terminals; connectors suitable for aluminum and copper are provided for easy cable installation.
Conduit Knock-Outs	Standard on all units.	Standard on 75 kVA & 225 kVA units.
Impedance	Typically 2.5% to 6.5%	Typically 2.5% to 6.5%
Mounting	Floor or wall/ceiling mounting available. Refer to selection tables for details.	Floor or wall/ceiling mounting available. Refer to selection tables for details.
Sound level	Meets NEMA ST-20 standards. **(Optional low noise units available)**	Meets NEMA ST-20 standards. **(Optional low noise units available)**

Other voltages and kVA sizes not listed in this section are available upon request for both aluminum and copper wound units. Features as listed above may differ. Features as listed above may differ. Please contact customer service for details, price and availability.

FOR ACCESSORIES SEE PAGES 271 TO 274.

© Hammond Power Solutions Inc.
Data subject to change without notice.

ALUMINUM WOUND, SHIELDED, THREE PHASE

K-FACTOR 4

480 Delta Primary Volts 208Y/120 Secondary Volts 60 Hz

May be used on a 4 wire 480Y/277 Volt Supply

kVA	Catalog Number	Case Style (Pages 260 - 267)	Approx. Dimensions (Inches) Width	Depth	Height	Approx. Weight (Lbs.)	Mtg Type W - Wall F - Floor	Wiring Diagram (Pages 276 - 288)
15	**NMT04K015KBS**	NH5	19.40	20.20	21.50	190	F or W *	SCD 7
30	**NMT04K030KBS**	NH6	23.90	25.00	28.75	330	F or W *	SCD 19
45	**NMT04K045KBS**	NH6	23.90	25.00	28.75	430	F or W *	SCD 19
75	**NMT04K075KBS**	NH3	26.00	25.00	38.00	640	F or W *	SCD 19
112.5	**NMT04K112KBS**	NH3	26.00	25.00	38.00	920	F	SCD 19
150	**NMT04K150KBS**	NH4	32.00	29.50	41.00	1050	F	SCD 19
225	**NMT04K225KBS**	NH4	32.00	29.50	41.00	1575	F	SCD 19
300	**NMT04K300KBS**	NJ1	39.50	34.00	51.50	1830	F	SCD 19
500	**NMT04K500KBS**	NJ2	48.50	38.40	59.00	2150	F	SCD 20
750	**NMT04K750KBS**	NJ3	51.50	43.40	66.00	3375	F	SCD 20

*Wall mounting kit and/or drip plate kit required. Refer to pages 271 to 273 for details.

600 Delta Primary Volts 208Y/120 Secondary Volts 60 Hz

May be used on a 4 wire 600Y/347 Volt Supply

kVA	Catalog Number	Case Style (Pages 260 - 267)	Approx. Dimensions (Inches) Width	Depth	Height	Approx. Weight (Lbs.)	Mtg Type W - Wall F - Floor	Wiring Diagram (Pages 276 - 288)
15	**NMT04K015PBS**	NH5	19.40	20.20	21.50	190	F or W *	SCD 9
30	**NMT04K030PBS**	NH6	23.90	25.00	28.75	330	F or W *	SCD 9
45	**NMT04K045PBS**	NH6	23.90	25.00	28.75	430	F or W *	SCD 9
75	**NMT04K075PBS**	NH3	26.00	25.00	38.00	640	F or W *	SCD 9
112.5	**NMT04K112PBS**	NH3	26.00	25.00	38.00	920	F	SCD 9
150	**NMT04K150PBS**	NH4	32.00	29.50	41.00	1050	F	SCD 9
225	**NMT04K225PBS**	NH4	32.00	29.50	41.00	1575	F	SCD 9
300	**NMT04K300PBS**	NJ1	39.50	34.00	51.50	1830	F	SCD 9
500	**NMT04K500PBS**	NJ2	48.50	38.40	59.00	3000	F	SCD 10
750	**NMT04K750PBS**	NJ3	51.50	43.40	66.00	3375	F	SCD 10

*Wall mounting kit and/or drip plate kit required. Refer to pages 271 to 273 for details.

COPPER WOUND, SHIELDED, THREE PHASE

K-FACTOR 4

480 Delta Primary Volts 208Y/120 Secondary Volts 60 Hz

May be used on a 4 wire 480Y/277 Volt Supply

kVA	Catalog Number	Case Style (Pages 260 - 267)	Approx. Dimensions (Inches) Width	Depth	Height	Approx. Weight (Lbs.)	Mtg Type W - Wall F - Floor	Wiring Diagram (Pages 276 - 288)
15	**NMT04K015KBKF**	NH5	19.40	20.20	21.50	210	F or W *	SCD 7
30	**NMT04K030KBKN**	NH6	23.90	25.00	28.75	350	F or W *	SCD 19
45	**NMT04K045KBK**	NH6	23.90	25.00	28.75	460	F or W *	SCD 19
75	**NMT04K075KBK**	NH3	26.00	25.00	38.00	665	F or W *	SCD 19
112.5	**NMT04K112KBK**	NH3	26.00	25.00	38.00	945	F	SCD 19
150	**NMT04K150KBK**	NH4	32.00	29.50	41.00	1070	F	SCD 19
225	**NMT04K225KBK**	NH4	32.00	29.50	41.00	1725	F	SCD 19
300	**NMT04K300KBK**	NJ1	39.50	34.00	51.50	1925	F	SCD 19
500	**NMT04K500KBK**	NJ2	48.50	38.40	59.00	2500	F	SCD 20
750	**NMT04K750KBK**	NJ3	51.50	43.40	66.00	3300	F	SCD 20

*Wall mounting kit and/or drip plate kit required. Refer to pages 271 to 273 for details.

600 Delta Primary Volts 208Y/120 Secondary Volts 60 Hz

May be used on a 4 wire 600Y/347 Volt Supply

kVA	Catalog Number	Case Style (Pages 260 - 267)	Approx. Dimensions (Inches) Width	Depth	Height	Approx. Weight (Lbs.)	Mtg Type W - Wall F - Floor	Wiring Diagram (Pages 276 - 288)
15	**NMT04K015PBKF**	NH5	19.40	20.20	21.50	210	F or W *	SCD 9
30	**NMT04K030PBKN**	NH6	23.90	25.00	28.75	350	F or W *	SCD 9
45	**NMT04K045PBK**	NH6	23.90	25.00	28.75	460	F or W *	SCD 19
75	**NMT04K075PBK**	NH3	26.00	25.00	38.00	665	F or W *	SCD 9
112.5	**NMT04K112PBK**	NH3	26.00	25.00	38.00	945	F	SCD 9
150	**NMT04K150PBK**	NH4	32.00	29.50	41.00	1070	F	SCD 9
225	**NMT04K225PBK**	NJ1	39.50	34.00	51.50	1725	F	SCD 9
300	**NMT04K300PBK**	NJ1	39.50	34.00	51.50	1925	F	SCD 9
500	**NMT04K500PBK**	NJ2	48.50	38.40	59.00	2925	F	SCD 10
750	**NMT04K750PBK**	NJ3	51.50	43.40	66.00	3375	F	SCD 10

*Wall mounting kit and/or drip plate kit required. Refer to pages 271 to 273 for details.

Products listed on this page are available as 'CE Mark' products. Please consult our sales office.

For accessories see pages 271 to 274.

© Hammond Power Solutions Inc.

Data subject to change without notice.

ALUMINUM WOUND, SHIELDED, THREE PHASE

K-FACTOR 13

480 Delta Primary Volts 208Y/120 Secondary Volts 60 Hz

May be used on a 4 wire 480Y/277 Volt Supply

kVA	Catalog Number	Case Style (Pages 260 - 267)	Approx. Dimensions (Inches) Width	Depth	Height	Approx. Weight (Lbs.)	Mtg Type W - Wall F - Floor	Wiring Diagram (Pages 276 - 288)
15	**NMT13K015KBS**	NH6	23.90	25.00	28.75	190	F or W *	SCD 19
30	**NMT13K030KBS**	NH6	23.90	25.00	28.75	340	F or W *	SCD 19
45	**NMT13K045KBS**	NH6	23.90	25.00	28.75	410	F or W *	SCD 19
75	**NMT13K075KBS**	NH3	26.00	25.00	38.00	675	F or W *	SCD 19
112.5	**NMT13K112KBS**	NH4	32.00	29.50	41.00	920	F	SCD 19
150	**NMT13K150KBS**	NH4	32.00	29.50	41.00	1050	F	SCD 19
225	**NMT13K225KBS**	NJ1	39.50	34.00	51.50	1600	F	SCD 19
300	**NMT13K300KBS**	NJ1	39.50	34.00	51.50	1830	F	SCD 20
500	**NMT13K500KBS**	NJ3	51.50	43.40	66.00	3000	F	SCD 20
750	**NMT13K750KBS**	NJ3	51.50	43.40	66.00	4300	F	SCD 10

*Wall mounting kit and/or drip plate kit required. Refer to pages 271 to 273 for details.

600 Delta Primary Volts 208Y/120 Secondary Volts 60 Hz

May be used on a 4 wire 600Y/347 Volt Supply

kVA	Catalog Number	Case Style (Pages 260 - 267)	Approx. Dimensions (Inches) Width	Depth	Height	Approx. Weight (Lbs.)	Mtg Type W - Wall F - Floor	Wiring Diagram (Pages 276 - 288)
15	**NMT13K015PBS**	NH5	19.40	20.20	21.50	190	F or W *	SCD 9
30	**NMT13K030PBS**	NH6	23.90	25.00	28.75	340	F or W *	SCD 9
45	**NMT13K045PBS**	NH6	23.90	25.00	28.75	410	F or W *	SCD 9
75	**NMT13K075PBS**	NH3	26.00	25.00	38.00	675	F or W *	SCD 9
112.5	**NMT13K112PBS**	NH4	32.00	29.50	41.00	920	F	SCD 9
150	**NMT13K150PBS**	NH4	32.00	29.50	41.00	1050	F	SCD 9
225	**NMT13K225PBS**	NJ1	39.50	34.00	51.50	1600	F	SCD 9
300	**NMT13K300PBS**	NJ1	39.50	34.00	51.50	1900	F	SCD 9
500	**NMT13K500PBS**	NJ3	51.50	43.40	66.00	3000	F	SCD 10
750	**NMT13K750PBS**	NJ3	51.50	43.40	66.00	4300	F	SCD 10

*Wall mounting kit and/or drip plate kit required. Refer to pages 271 to 273 for details.

COPPER WOUND, SHIELDED, THREE PHASE

K-FACTOR 13

480 Delta Primary Volts 208Y/120 Secondary Volts 60 Hz

May be used on a 4 wire 480Y/277 Volt Supply

kVA	Catalog Number	Case Style (Pages 260 - 267)	Approx. Dimensions (Inches) Width	Depth	Height	Approx. Weight (Lbs.)	Mtg Type W - Wall F - Floor	Wiring Diagram (Pages 276 - 288)
15	**NMT13K015KBKF**	NH6	23.90	25.00	28.75	280	F or W *	SCD 19
30	**NMT13K030KBKN**	NH6	23.90	25.00	28.75	350	F or W *	SCD 19
45	**NMT13K045KBK**	NH6	23.90	25.00	28.75	470	F or W *	SCD 19
75	**NMT13K075KBK**	NH3	26.00	25.00	38.00	680	F or W *	SCD 19
112.5	**NMT13K112KBK**	NH4	32.00	29.50	41.00	970	F	SCD 19
150	**NMT13K150KBK**	NH4	32.00	29.50	41.00	1200	F	SCD 19
225	**NMT13K225KBK**	NJ1	39.50	34.00	51.50	1900	F	SCD 19
300	**NMT13K300KBK**	NJ1	39.50	34.00	51.50	2150	F	SCD 19
500	**NMT13K500KBK**	NJ2	51.50	43.40	66.00	3200	F	SCD 20
750	**NMT13K750KBK**	NJ3	51.50	43.40	66.00	4500	F	SCD 20

*Wall mounting kit and/or drip plate kit required. Refer to pages 271 to 273 for details.

600 Delta Primary Volts 208Y/120 Secondary Volts 60 Hz

May be used on a 4 wire 600Y/347 Volt Supply

kVA	Catalog Number	Case Style (Pages 260 - 267)	Approx. Dimensions (Inches) Width	Depth	Height	Approx. Weight (Lbs.)	Mtg Type W - Wall F - Floor	Wiring Diagram (Pages 276 - 288)
15	**NMT13K015PBKF**	NH6	23.90	25.00	28.75	295	F or W *	SCD 9
30	**NMT13K030PBKN**	NH6	23.90	25.00	28.75	350	F or W *	SCD 9
45	**NMT13K045PBK**	NH6	23.90	25.00	28.75	480	F or W *	SCD 19
75	**NMT13K075PBK**	NH3	26.00	25.00	38.00	700	F or W *	SCD 9
112.5	**NMT13K112PBK**	NH4	32.00	29.50	41.00	970	F	SCD 9
150	**NMT13K150PBK**	NH4	32.00	29.50	41.00	1200	F	SCD 9
225	**NMT13K225PBK**	NJ1	39.50	34.00	51.50	1900	F	SCD 9
300	**NMT13K300PBK**	NJ1	39.50	34.00	51.50	2400	F	SCD 9
500	**NMT13K500PBK**	NJ2	51.50	43.40	66.00	3200	F	SCD 10
750	**NMT13K750PBK**	NJ3	51.50	43.40	66.00	4500	F	SCD 10

*Wall mounting kit and/or drip plate kit required. Refer to pages 271 to 273 for details.

Products listed on this page are available as 'CE Mark' products. Please consult our sales office.

For accessories see pages 271 to 274.

© Hammond Power Solutions Inc.

Data subject to change without notice.

ALUMINUM WOUND, SHIELDED, THREE PHASE

K-FACTOR 20

480 Delta Primary Volts 208Y/120 Secondary Volts 60 Hz

May be used on a 4 wire 480Y/277 Volt Supply

kVA	Catalog Number	Case Style (Pages 260 - 267)	Approx. Dimensions (Inches) Width	Depth	Height	Approx. Weight (Lbs.)	Mtg Type W - Wall F - Floor	Wiring Diagram (Pages 276 - 288)
15	**NMT20K015KBS**	NH6	23.90	25.00	28.75	275	F or W *	SCD 19
30	**NMT20K030KBS**	NH6	23.90	25.00	28.75	365	F or W *	SCD 19
45	**NMT20K045KBS**	NH3	26.00	25.00	38.00	565	F or W *	SCD 19
75	**NMT20K075KBS**	NH3	26.00	25.00	38.00	730	F or W *	SCD 19
112.5	**NMT20K112KBS**	NH4	32.00	29.50	41.00	950	F	SCD 19
150	**NMT20K150KBS**	NH4	32.00	29.50	41.00	1400	F	SCD 19
225	**NMT20K225KBS**	NJ1	39.50	34.00	51.50	1900	F	SCD 19
300	**NMT20K300KBS**	NJ2	48.50	38.40	59.00	2400	F	SCD 20
500	**NMT20K500KBS**	NJ3	51.50	43.40	66.00	3600	F	SCD 20
750	**NMT20K750KBS**			**CONSULT FACTORY**				

*Wall mounting kit and/or drip plate kit required. Refer to pages 271 to 273 for details.

600 Delta Primary Volts 208Y/120 Secondary Volts 60 Hz

May be used on a 4 wire 600Y/347 Volt Supply

kVA	Catalog Number	Case Style (Pages 260 - 267)	Approx. Dimensions (Inches) Width	Depth	Height	Approx. Weight (Lbs.)	Mtg Type W - Wall F - Floor	Wiring Diagram (Pages 276 - 288)
15	**NMT20K015PBS**	NH6	23.90	25.00	28.75	275	F or W *	SCD 9
30	**NMT20K030PBS**	NH6	23.90	25.00	28.75	365	F or W *	SCD 9
45	**NMT20K045PBS**	NH3	26.00	25.00	38.00	565	F or W *	SCD 9
75	**NMT20K075PBS**	NH3	26.00	25.00	38.00	730	F or W *	SCD 9
112.5	**NMT20K112PBS**	NH4	32.00	29.50	41.00	950	F	SCD 9
150	**NMT20K150PBS**	NH4	32.00	29.50	41.00	1400	F	SCD 9
225	**NMT20K225PBS**	NJ1	39.50	34.00	51.50	1900	F	SCD 9
300	**NMT20K300PBS**	NJ2	48.50	38.40	59.00	2400	F	SCD 10
500	**NMT20K500PBS**	NJ3	51.50	43.40	66.00	3600	F	SCD 10
750	**NMT20K750PBS**			**CONSULT FACTORY**				

*Wall mounting kit and/or drip plate kit required. Refer to pages 271 to 273 for details.

COPPER WOUND, SHIELDED, THREE PHASE

K-FACTOR 20

480 Delta Primary Volts 208Y/120 Secondary Volts 60 Hz

May be used on a 4 wire 480Y/277 Volt Supply

kVA	Catalog Number	Case Style (Pages 260 - 267)	Approx. Dimensions (Inches) Width	Depth	Height	Approx. Weight (Lbs.)	Mtg Type W - Wall F - Floor	Wiring Diagram (Pages 276 - 288)
15	**NMT20K015KBKF**	NH6	23.90	25.00	28.75	275	F or W *	SCD 19
30	**NMT20K030KBKN**	NH6	23.90	25.00	28.75	440	F or W *	SCD 19
45	**NMT20K045KBK**	NH3	26.00	25.00	38.00	700	F or W *	SCD 19
75	**NMT20K075KBK**	NH3	26.00	25.00	38.00	860	F or W *	SCD 19
112.5	**NMT20K112KBK**	NH4	32.00	29.50	41.00	1150	F	SCD 19
150	**NMT20K150KBK**	NH4	32.00	29.50	41.00	1600	F	SCD 19
225	**NMT20K225KBK**	NJ1	39.50	34.00	51.50	2100	F	SCD 19
300	**NMT20K300KBK**	NJ2	48.50	38.40	59.00	2600	F	SCD 20
500	**NMT20K500KBK**	NJ3	51.50	43.40	66.00	3800	F	SCD 20
750	**NMT20K750KBK**			**CONSULT FACTORY**				

*Wall mounting kit and/or drip plate kit required. Refer to pages 271 to 273 for details.

600 Delta Primary Volts 208Y/120 Secondary Volts 60 Hz

May be used on a 4 wire 600Y/347 Volt Supply

kVA	Catalog Number	Case Style (Pages 260 - 267)	Approx. Dimensions (Inches) Width	Depth	Height	Approx. Weight (Lbs.)	Mtg Type W - Wall F - Floor	Wiring Diagram (Pages 276 - 288)
15	**NMT20K015PBKF**	NH6	23.90	25.00	28.75	275	F or W *	SCD 9
30	**NMT20K030PBKN**	NH6	23.90	25.00	28.75	440	F or W *	SCD 9
45	**NMT20K045PBK**	NH3	26.00	25.00	38.00	700	F or W *	SCD 9
75	**NMT20K075PBK**	NH3	26.00	25.00	38.00	860	F or W *	SCD 9
112.5	**NMT20K112PBK**	NH4	32.00	29.50	41.00	1150	F	SCD 9
150	**NMT20K150PBK**	NH4	32.00	29.50	41.00	1600	F	SCD 9
225	**NMT20K225PBK**	NJ1	39.50	34.00	51.50	2100	F	SCD 9
300	**NMT20K300PBK**	NJ2	48.50	38.40	59.00	2600	F	SCD 10
500	**NMT20K500PBK**	NJ3	51.50	43.40	66.00	3800	F	SCD 10
750	**NMT20K750PBK**			**CONSULT FACTORY**				

*Wall mounting kit and/or drip plate kit required. Refer to pages 271 to 273 for details.

Products listed on this page are available as 'CE Mark' products. Please consult our sales office.

For accessories see pages 271 to 274.

© Hammond Power Solutions Inc.

Data subject to change without notice.

HPS SUPERSYNERGY®

600 VOLT CLASS ENERGY EFFICIENT K-FACTOR TRANSFORMERS

K-Factor Transformer Efficiencies:

HPS SUPERSYNERGY (PART NUMBER PREFIX SMT)

The HPS SuperSynergy energy efficient k-factor transformer exceeds DOE 10 CFR Part 431/C802.2 efficiencies over a range of linear loads. It will not only satisfy the necessity for running at k-factor modern building load types, but in addition, because of the increasing need for energy conservation, they are much more efficient than that of our standard energy efficient line.

- Efficiency performance will meet the **NEMA Premium®** guidelines; **30% lower losses** than DOE 10 CFR Part 431 and (if applicable) C802.2 efficiency standards; when measured under a linear load profile at **35%** of rated load.
- Efficiency will meet or exceed DOE 10 CFR Part 431 and (if applicable) C802.2 standards; for linear load even at **50%** of rated load when measured under a **non-linear** load up to **K13**.
- Copper and Aluminum Available.

HPS SuperSynergy®

600V CLASS SUPER ENERGY EFFICIENT K-FACTOR TRANSFORMERS

THREE PHASE STANDARD SPECIFICATIONS

15 TO 45 KVA

75 TO 750 KVA

	15 to 45 kVA	75 to 750 kVA
Efficiency	Efficiency performance will meet the **NEMA Premium®** guidelines; **30% lower losses** than DOE 10 CFR Part 431 and (if applicable) C802.2 efficiency standards; when measured under a linear load profile at 35% of the rated load. Efficiency will meet or exceed DOE 10 CFR Part 431 and (if applicable) C802.2 efficiency standards; for linear loads even at **50%** of rated load when measured under a **non-linear** load up to **K13**.	
UL Listed	File: E112313	File: E112313
CSA Certified	File: LR3902	File: LR3902
Frequency	60 Hz	60 Hz
Insulation System	220°C (150°C rise) 200°C (130°C rise) on 15 & 30kVA copper (optional 115°C and 80°C rise available)	220°C (150°C rise) (optional 115°C and 80°C rise available)
Electrostatic Shield	60dB Common Mode - typical	60dB Common Mode - typical
Enclosure Type	Heavy Duty Ventilated Type 3R Optional Type 4, 4X (stainless steel) and 12.	Heavy Duty Ventilated Type 3R Optional Type 4, 4X (stainless steel) and 12.
Enclosure Finish	ANSI 61 Grey, UL50	ANSI 61 Grey, UL50
Neutral	Neutral terminal for field connection (on applicable units).	Neutral terminal for field connection (on applicable units).
Standard Primary Taps	Refer to wiring diagrams for details.	Refer to wiring diagrams for details.
Termination	Front accessible separate high and low voltage terminals; connectors suitable for aluminum and copper are provided for easy cable installation.	Front accessible separate high and low voltage terminals; connectors suitable for aluminum and copper are provided for easy cable installation.
Conduit Knock-Outs	Standard on all units.	Standard on 75 kVA & 150 kVA units.
Impedance	Typically 2.5% to 6.5%	Typically 2.5% to 6.5%
Mounting	Floor or wall/ceiling mounting available. Refer to selection tables for details.	Floor or wall/ceiling mounting available. Refer to selection tables for details.
Sound level	Meets NEMA ST-20 standards. **(Optional low noise units available)**	Meets NEMA ST-20 standards. **(Optional low noise units available)**

*** Optional TVSS available. Dual Output option also available. Features as listed above may differ. Contact sales for more details.**

For accessories see pages 271 to 274.

© Hammond Power Solutions Inc.
Data subject to change without notice.

ALUMINUM WOUND, SHIELDED, THREE PHASE

K-FACTOR 13

208 Delta Primary Volts 208Y/120 Secondary Volts 60 Hz

kVA	Catalog Number	Case Style (Pages 260 - 267)	Approx. Dimensions (Inches) Width	Depth	Height	Approx. Weight (Lbs.)	Mtg Type W - Wall F - Floor	Wiring Diagram (Pages 276 - 288)
15	Only available in copper. Please see SMT13K015BBKN on page 200 for details.							
30	**SMT13K030BBS**	NH6	23.90	25.00	28.75	350	F or W *	SCD 19
45	**SMT13K045BBS**	NH3	26.00	25.00	38.00	460	F or W *	SCD 19
75	**SMT13K075BBS**	NH4	32.00	29.50	41.00	650	F	SCD 19
112.5	**SMT13K112BBS**	NH4	32.00	29.50	41.00	960	F	SCD 19
150	**SMT13K150BBS**	NH4	32.00	29.50	41.00	1210	F	SCD 19
225	**SMT13K225BBS**	NJ1	39.50	34.00	51.50	1970	F	SCD 19
300	**SMT13K300BBS**	NJ2	48.50	38.40	59.00	2590	F	SCD 20
500	**SMT13K500BBS**	NJ3	51.50	43.40	66.00	4460	F	SCD 20
750	**SMT13K750BBS**	NJ6	64.00	51.40	71.00	6260	F	SCD 20

*Wall mounting kit and/or drip plate kit required. Refer to pages 271 to 273 for details.

208 Delta Primary Volts 480Y/277 Secondary Volts 60 Hz

kVA	Catalog Number	Case Style (Pages 260 - 267)	Approx. Dimensions (Inches) Width	Depth	Height	Approx. Weight (Lbs.)	Mtg Type W - Wall F - Floor	Wiring Diagram (Pages 276 - 288)
15	Only available in copper. Please see SMT13K015BKKN on page 200 for details.							
30	**SMT13K030BKS**	NH6	23.90	25.00	28.75	350	F or W *	SCD 19
45	**SMT13K045BKS**	NH3	26.00	25.00	38.00	460	F or W *	SCD 19
75	**SMT13K075BKS**	NH4	32.00	29.50	41.00	650	F	SCD 19
112.5	**SMT13K112BKS**	NH4	32.00	29.50	41.00	960	F	SCD 19
150	**SMT13K150BKS**	NH4	32.00	29.50	41.00	1210	F	SCD 19
225	**SMT13K225BKS**	NJ1	39.50	34.00	51.50	1970	F	SCD 19
300	**SMT13K300BKS**	NJ2	48.50	38.40	59.00	2590	F	SCD 20
500	**SMT13K500BKS**	NJ3	51.50	43.40	66.00	4460	F	SCD 20
750	**SMT13K750BKS**	NJ6	64.00	51.40	71.00	6260	F	SCD 20

*Wall mounting kit and/or drip plate kit required. Refer to pages 271 to 273 for details.

480 Delta Primary Volts 208Y/120 Secondary Volts 60 Hz

May be used on a 4 wire 480Y/277 Volt Supply

kVA	Catalog Number	Case Style (Pages 260 - 267)	Approx. Dimensions (Inches) Width	Depth	Height	Approx. Weight (Lbs.)	Mtg Type W - Wall F - Floor	Wiring Diagram (Pages 276 - 288)
15	Only available in copper. Please see SMT13K015KBKN on page 200 for details.							
30	**SMT13K030KBS**	NH6	23.90	25.00	28.75	350	F or W *	SCD 19
45	**SMT13K045KBS**	NH3	26.00	25.00	38.00	460	F or W *	SCD 19
75	**SMT13K075KBS**	NH4	32.00	29.50	41.00	650	F	SCD 19
112.5	**SMT13K112KBS**	NH4	32.00	29.50	41.00	960	F	SCD 19
150	**SMT13K150KBS**	NH4	32.00	29.50	41.00	1210	F	SCD 19
225	**SMT13K225KBS**	NJ1	39.50	34.00	51.50	1970	F	SCD 19
300	**SMT13K300KBS**	NJ2	48.50	38.40	59.00	2590	F	SCD 20
500	**SMT13K500KBS**	NJ3	51.50	43.40	66.00	4460	F	SCD 20
750	**SMT13K750KBS**	NJ6	64.00	51.40	71.00	6260	F	SCD 20

*Wall mounting kit and/or drip plate kit required. Refer to pages 271 to 273 for details.

For accessories see pages 271 to 274.

© Hammond Power Solutions Inc.

Data subject to change without notice.

ALUMINUM WOUND, SHIELDED, THREE PHASE

K-FACTOR 13

480 Delta Primary Volts 480Y/277 Secondary Volts 60 Hz

May be used on a 4 wire 480Y/277 Volt Supply

kVA	Catalog Number	Case Style (Pages 260 - 267)	Approx. Dimensions (Inches) Width	Depth	Height	Approx. Weight (Lbs.)	Mtg Type W - Wall F - Floor	Wiring Diagram (Pages 276 - 288)
15	**Only available in copper. Please see SMT13K015KKKN on page 201 for details.**							
30	**SMT13K030KKS**	NH6	23.90	25.00	28.75	350	F or W *	SCD 19
45	**SMT13K045KKS**	NH3	26.00	25.00	38.00	460	F or W *	SCD 19
75	**SMT13K075KKS**	NH4	32.00	29.50	41.00	650	F	SCD 19
112.5	**SMT13K112KKS**	NH4	32.00	29.50	41.00	960	F	SCD 19
150	**SMT13K150KKS**	NH4	32.00	29.50	41.00	1210	F	SCD 19
225	**SMT13K225KKS**	NJ1	39.50	34.00	51.50	1970	F	SCD 19
300	**SMT13K300KKS**	NJ2	48.50	38.40	59.00	2590	F	SCD 20
500	**SMT13K500KKS**	NJ3	51.50	43.40	66.00	4460	F	SCD 20
750	**SMT13K750KKS**	NJ6	64.00	51.40	71.00	6260	F	SCD 20

*Wall mounting kit and/or drip plate kit required. Refer to pages 271 to 273 for details.

600 Delta Primary Volts 208Y/120 Secondary Volts 60 Hz

May be used on a 4 wire 600Y/347 Volt Supply

kVA	Catalog Number	Case Style (Pages 260 - 267)	Approx. Dimensions (Inches) Width	Depth	Height	Approx. Weight (Lbs.)	Mtg Type W - Wall F - Floor	Wiring Diagram (Pages 276 - 288)
15	**Only available in copper. Please see SMT13K015PBKN on page 201 for details.**							
30	**SMT13K030PBS**	NH6	23.90	25.00	28.75	350	F or W *	SCD 9
45	**SMT13K045PBS**	NH3	26.00	25.00	38.00	460	F or W *	SCD 9
75	**SMT13K075PBS**	NH4	32.00	29.50	41.00	650	F	SCD 9
112.5	**SMT13K112PBS**	NH4	32.00	29.50	41.00	960	F	SCD 9
150	**SMT13K150PBS**	NH4	32.00	29.50	41.00	1210	F	SCD 9
225	**SMT13K225PBS**	NJ1	39.50	34.00	51.50	1970	F	SCD 9
300	**SMT13K300PBS**	NJ2	48.50	38.40	59.00	2590	F	SCD 10
500	**SMT13K500PBS**	NJ3	51.50	43.40	66.00	4460	F	SCD 10
750	**SMT13K750PBS**	NJ6	64.00	51.40	71.00	6260	F	SCD 10

*Wall mounting kit and/or drip plate kit required. Refer to pages 271 to 273 for details.

600 Delta Primary Volts 480Y/277 Secondary Volts 60 Hz

May be used on a 4 wire 600Y/347 Volt Supply

kVA	Catalog Number	Case Style (Pages 260 - 267)	Approx. Dimensions (Inches) Width	Depth	Height	Approx. Weight (Lbs.)	Mtg Type W - Wall F - Floor	Wiring Diagram (Pages 276 - 288)
15	**Only available in copper. Please see SMT13K015PKKN on page 201 for details.**							
30	**SMT13K030PKS**	NH6	23.90	25.00	28.75	350	F or W *	SCD 9
45	**SMT13K045PKS**	NH3	26.00	25.00	38.00	460	F or W *	SCD 9
75	**SMT13K075PKS**	NH4	32.00	29.50	41.00	650	F	SCD 9
112.5	**SMT13K112PKS**	NH4	32.00	29.50	41.00	960	F	SCD 9
150	**SMT13K150PKS**	NH4	32.00	29.50	41.00	1210	F	SCD 9
225	**SMT13K225PKS**	NJ1	39.50	34.00	51.50	1970	F	SCD 9
300	**SMT13K300PKS**	NJ2	48.50	38.40	59.00	2590	F	SCD 10
500	**SMT13K500PKS**	NJ3	51.50	43.40	66.00	4460	F	SCD 10
750	**SMT13K750PKS**	NJ6	64.00	51.40	71.00	6260	F	SCD 10

*Wall mounting kit and/or drip plate kit required. Refer to pages 271 to 273 for details.

© Hammond Power Solutions Inc.
Data subject to change without notice.

COPPER WOUND, SHIELDED, THREE PHASE

K-FACTOR 13

208 Delta Primary Volts 208Y/120 Secondary Volts 60 Hz

kVA	Catalog Number	Case Style (Pages 260 - 267)	Approx. Dimensions (Inches) Width	Depth	Height	Approx. Weight (Lbs.)	Mtg Type W - Wall F - Floor	Wiring Diagram (Pages 276 - 288)
15	**SMT13K015BBKN**	NH5	19.40	20.20	21.50	250	F or W *	SCD 19
30	**SMT13K030BBKN**	NH6	23.90	25.00	28.75	390	F or W *	SCD 19
45	**SMT13K045BBK**	NH6	23.90	25.00	28.75	460	F or W *	SCD 19
75	**SMT13K075BBK**	NH3	26.00	25.00	38.00	660	F or W *	SCD 19
112.5	**SMT13K112BBK**	NH4	32.00	29.50	41.00	1000	F	SCD 19
150	**SMT13K150BBK**	NH4	32.00	29.50	41.00	1250	F	SCD 19
225	**SMT13K225BBK**	NJ1	39.50	34.00	51.50	1960	F	SCD 19
300	**SMT13K300BBK**	NJ2	48.50	38.40	59.00	2470	F	SCD 20
500	**SMT13K500BBK**	NJ3	51.50	43.40	66.00	3930	F	SCD 20
750	**SMT13K750BBK**	NJ6	64.00	57.40	71.00	5750	F	SCD20

*Wall mounting kit and/or drip plate kit required. Refer to pages 271 to 273 for details.

208 Delta Primary Volts 480Y/277 Secondary Volts 60 Hz

kVA	Catalog Number	Case Style (Pages 260 - 267)	Approx. Dimensions (Inches) Width	Depth	Height	Approx. Weight (Lbs.)	Mtg Type W - Wall F - Floor	Wiring Diagram (Pages 276 - 288)
15	**SMT13K015BKKN**	NH5	19.40	20.20	21.50	250	F or W *	SCD 19
30	**SMT13K030BKKN**	NH6	23.90	25.00	28.75	390	F or W *	SCD 19
45	**SMT13K045BKK**	NH6	23.90	25.00	28.75	460	F or W *	SCD 19
75	**SMT13K075BKK**	NH3	26.00	25.00	38.00	660	F or W *	SCD 19
112.5	**SMT13K112BKK**	NH4	32.00	29.50	41.00	1000	F	SCD 19
150	**SMT13K150BKK**	NH4	32.00	29.50	41.00	1250	F	SCD 19
225	**SMT13K225BKK**	NJ1	39.50	34.00	51.50	1960	F	SCD 19
300	**SMT13K300BKK**	NJ2	48.50	38.40	59.00	2470	F	SCD 20
500	**SMT13K500BKK**	NJ3	51.50	43.40	66.00	3930	F	SCD 20
750	**SMT13K750BKK**	NJ6	64.00	57.40	71.00	5750	F	SCD20

*Wall mounting kit and/or drip plate kit required. Refer to pages 271 to 273 for details.

480 Delta Primary Volts 208Y/120 Secondary Volts 60 Hz

May be used on a 4 wire 480Y/277 Volt Supply

kVA	Catalog Number	Case Style (Pages 260 - 267)	Approx. Dimensions (Inches) Width	Depth	Height	Approx. Weight (Lbs.)	Mtg Type W - Wall F - Floor	Wiring Diagram (Pages 276 - 288)
15	**SMT13K015KBKN**	NH5	19.40	20.20	21.50	250	F or W *	SCD 19
30	**SMT13K030KBKN**	NH6	23.90	25.00	28.75	390	F or W *	SCD 19
45	**SMT13K045KBK**	NH6	23.90	25.00	28.75	460	F or W *	SCD 19
75	**SMT13K075KBK**	NH3	26.00	25.00	38.00	660	F or W *	SCD 19
112.5	**SMT13K112KBK**	NH4	32.00	29.50	41.00	1000	F	SCD 19
150	**SMT13K150KBK**	NH4	32.00	29.50	41.00	1250	F	SCD 19
225	**SMT13K225KBK**	NJ1	39.50	34.00	51.50	1960	F	SCD 19
300	**SMT13K300KBK**	NJ2	48.50	38.40	59.00	2470	F	SCD 20
500	**SMT13K500KBK**	NJ3	51.50	43.40	66.00	3930	F	SCD 20
750	**SMT13K750KBK**	NJ6	64.00	57.40	71.00	5750	F	SCD20

*Wall mounting kit and/or drip plate kit required. Refer to pages 271 to 273 for details.

© Hammond Power Solutions Inc.
Data subject to change without notice.

COPPER WOUND, SHIELDED, THREE PHASE

K-FACTOR 13

480 Delta Primary Volts 480Y/277 Secondary Volts 60 Hz

May be used on a 4 wire 480Y/277 Volt Supply

kVA	Catalog Number	Case Style (Pages 260 - 267)	Approx. Dimensions (Inches) Width	Depth	Height	Approx. Weight (Lbs.)	Mtg Type W - Wall F - Floor	Wiring Diagram (Pages 276 - 288)
15	**SMT13K015KKKN**	NH5	19.40	20.20	21.50	250	F or W *	SCD 19
30	**SMT13K030KKKN**	NH6	23.90	25.00	28.75	390	F or W *	SCD 19
45	**SMT13K045KKK**	NH6	23.90	25.00	28.75	460	F or W *	SCD 19
75	**SMT13K075KKK**	NH3	26.00	25.00	38.00	660	F or W *	SCD 19
112.5	**SMT13K112KKK**	NH4	32.00	29.50	41.00	1000	F	SCD 19
150	**SMT13K150KKK**	NH4	32.00	29.50	41.00	1250	F	SCD 19
225	**SMT13K225KKK**	NJ1	39.50	34.00	51.50	1960	F	SCD 19
300	**SMT13K300KKK**	NJ2	48.50	38.40	59.00	2470	F	SCD 20
500	**SMT13K500KKK**	NJ3	51.50	43.40	66.00	3930	F	SCD 20
750	**SMT13K750KKK**	NJ6	64.00	57.40	71.00	5750	F	SCD20

*Wall mounting kit and/or drip plate kit required. Refer to pages 271 to 273 for details.

600 Delta Primary Volts 208Y/120 Secondary Volts 60 Hz

May be used on a 4 wire 600Y/347 Volt Supply

kVA	Catalog Number	Case Style (Pages 260 - 267)	Approx. Dimensions (Inches) Width	Depth	Height	Approx. Weight (Lbs.)	Mtg Type W - Wall F - Floor	Wiring Diagram (Pages 276 - 288)
15	**SMT13K015PBKN**	NH5	19.40	20.20	21.50	250	F or W *	SCD 19
30	**SMT13K030PBKN**	NH6	23.90	25.00	28.75	390	F or W *	SCD 19
45	**SMT13K045PBK**	NH6	23.90	25.00	28.75	460	F or W *	SCD 19
75	**SMT13K075PBK**	NH3	26.00	25.00	38.00	660	F or W *	SCD 19
112.5	**SMT13K112PBK**	NH4	32.00	29.50	41.00	1000	F	SCD 19
150	**SMT13K150PBK**	NH4	32.00	29.50	41.00	1250	F	SCD 19
225	**SMT13K225PBK**	NJ1	39.50	34.00	51.50	1960	F	SCD 19
300	**SMT13K300PBK**	NJ2	48.50	38.40	59.00	2470	F	SCD 20
500	**SMT13K500PBK**	NJ3	51.50	43.40	66.00	3930	F	SCD 20
750	**SMT13K750PBK**	NJ6	64.00	57.40	71.00	5750	F	SCD20

*Wall mounting kit and/or drip plate kit required. Refer to pages 271 to 273 for details.

600 Delta Primary Volts 480Y/277 Secondary Volts 60 Hz

May be used on a 4 wire 600Y/347 Volt Supply

kVA	Catalog Number	Case Style (Pages 260 - 267)	Approx. Dimensions (Inches) Width	Depth	Height	Approx. Weight (Lbs.)	Mtg Type W - Wall F - Floor	Wiring Diagram (Pages 276 - 288)
15	**SMT13K015PKKN**	NH5	19.40	20.20	21.50	250	F or W *	SCD 19
30	**SMT13K030PKKN**	NH6	23.90	25.00	28.75	390	F or W *	SCD 19
45	**SMT13K045PKK**	NH6	23.90	25.00	28.75	460	F or W *	SCD 19
75	**SMT13K075PKK**	NH3	26.00	25.00	38.00	660	F or W *	SCD 19
112.5	**SMT13K112PKK**	NH4	32.00	29.50	41.00	1000	F	SCD 19
150	**SMT13K150PKK**	NH4	32.00	29.50	41.00	1250	F	SCD 19
225	**SMT13K225PKK**	NJ1	39.50	34.00	51.50	1960	F	SCD 19
300	**SMT13K300PKK**	NJ2	48.50	38.40	59.00	2470	F	SCD 20
500	**SMT13K500PKK**	NJ3	51.50	43.40	66.00	3930	F	SCD 20
750	**SMT13K750PKK**	NJ6	64.00	57.40	71.00	5750	F	SCD20

*Wall mounting kit and/or drip plate kit required. Refer to pages 271 to 273 for details.

© Hammond Power Solutions Inc.
Data subject to change without notice.

HPS CENTURION® Series

600V CLASS HARMONIC MITIGATING TRANSFORMERS

The HPS Centurion Energy Efficient, Harmonic Mitigating Transformers with zero sequence flux cancellation technology is specifically designed to treat the harmonics generated by computer equipment and other non-linear, power electronic loads.

Harmonic mitigating transformers are superior to K-Rated and conventional transformers in reducing voltage distortion (flat-topping) and power losses due to current harmonics created by single-phase, non-linear loads such as computer equipment. Secondary windings are designed to cancel zero sequence fluxes and eliminate primary winding circulating currents. They treat zero sequence harmonics (3rd, 9th and 15th) within the secondary windings and 5th and 7th harmonics upstream with an appropriate phase shift.

Dual Output Option

Dual output, phase shifting HMT provides extremely low output voltage distortion and input current distortion even under severe non-linear loading conditions (Data Centers, Internet Service Providers, Telecom Sites, Broadcasting Studios, etc). Combining zero sequence flux cancellation with phase shifting treats 3rd, 5th, 7th, 9th, 15th, 17th and 19th harmonics within its secondary windings.

HPS Centurion Series Harmonic Mitigating Transformer:

- Prevents voltage flat-topping caused by non-linear loads
- Reduces upstream harmonic currents
- Eliminates transformer overheating and high operating temperatures
- Eliminates primary winding circulating current
- Saves energy by reducing harmonic losses
- Maintains high energy efficiency even under non-linear loading conditions
- Electrostatic shielding for high frequency noise attenuation
- Lowers voltage distortion to prevent premature equipment failure
- Restores ride-through capability of computer equipment
- Treats power quality harmonic issues which K-rated transformers do not address
- Suitable for high K-factor loads
- Reduces current distortion at UPS, generator or Utility service
- Improves Upstream Total Power Factor

HPS CENTURION®

600 VOLT CLASS ENERGY EFFICIENT HARMONIC MITIGATING TRANSFORMERS

Harmonic Mitigating Transformer Efficiencies:

The HPS Centurion energy efficient, harmonic mitigating transformer with zero sequence flux cancellation technology is specifically designed to treat the harmonics generated by computer equipment and other non-linear, power electronic loads.
Combining zero sequence flux cancellation with phase shifting treats 3rd, 5th, 7th, 9th, 15th, 17th and 19th, harmonics within its secondary windings. Typical applications of severe non-linear loading conditions include data centers, internet-service providers, telecom sites, call centers, broadcast centers, etc.

HPS CENTURION (PART NUMBER PREFIX H1EM OR H2EM)

- Meets **DOE 10 CFR Part 431 and C802.2** efficiencies at an operating range from **35% to 65%** of rated linear load.
- Meets **DOE 10 CFR Part 431** and **C802.2** efficiency standards when measured under a **non-linear** load profile up to **K20** in an operating range from **35% to 50%**.
- Copper & Aluminum Available.

HPS Centurion®

600V CLASS ENERGY EFFICIENT HARMONIC MITIGATING TRANSFORMERS

THREE PHASE STANDARD SPECIFICATIONS

15 to 45 kVA

75 TO 750 KVA

	15 to 45 kVA	75 to 750 kVA
Efficiency	Meets DOE 10 CFR Part 431 and C802.2 efficiencies at an operating range from 35% to 65% of rated linear load. Meets DOE 10 CFR Part 431 and C802.2 efficiency standards when measured under a non-linear load profile up to K20 in an operating range from 35% to 50%.	
UL Listed	File: E112313	File: E112313
CSA Certified	File: LR3902	File: LR3902
Frequency	60 Hz	60 Hz
Insulation System	220°C (150°C rise) 200°C (130°C rise) on 15 & 30kVA copper (optional 115°C and 80°C rise available)	220°C (150°C rise) (optional 115°C and 80°C rise available)
Electrostatic Shield	60dB Common Mode - typical	60dB Common Mode - typical
Enclosure Type	Heavy Duty Ventilated Type 3R Optional Type 4, 4X (stainless steel) and 12.	Heavy Duty Ventilated Type 3R Optional Type 4, 4X (stainless steel) and 12.
Enclosure Finish	ANSI 61 Grey, UL50	ANSI 61 Grey, UL50
Neutral	Neutral terminal for field connection (on applicable units).	Neutral terminal for field connection (on applicable units).
Standard Primary Taps	Refer to wiring diagrams for details.	Refer to wiring diagrams for details.
Termination	Front accessible separate high and low voltage terminals; connectors suitable for aluminum and copper are provided for easy cable installation.	Front accessible separate high and low voltage terminals; connectors suitable for aluminum and copper are provided for easy cable installation.
Conduit Knock-Outs	Standard on all units.	Standard on 75 kVA & 150 kVA units.
Impedance	Typically 2.5% to 6.5%	Typically 2.5% to 6.5%
Mounting	Floor or wall/ceiling mounting available. Refer to selection tables for details.	Floor or wall/ceiling mounting available. Refer to selection tables for details.
Sound level	Meets NEMA ST-20 standards. **(Optional low noise units available)**	Meets NEMA ST-20 standards. **(Optional low noise units available)**

*** Optional TVSS available. Dual Output option also available. Features as listed above may differ. Contact sales for more details.**

For accessories see pages 271 to 274.

© Hammond Power Solutions Inc.

Data subject to change without notice.

ALUMINUM WOUND, THREE PHASE, SHIELDED
0° PHASE SHIFT

208 Delta Primary Volts — 208Y/120 Secondary Volts — 60 Hz

kVA	Catalog Number	Case Style (Pages 260 - 267)	Approx. Dimensions (Inches) Width	Depth	Height	Approx. Weight (Lbs.)	Mtg Type W - Wall F - Floor	Wiring Diagram (Pages 276 - 288)
15	**H1EM015BB00S**	NH5	19.40	20.20	21.50	220	F or W *	SCD 35
30	**H1EM030BB00S**	NH6	23.90	25.00	28.75	320	F or W *	SCD 35
45	**H1EM045BB00S**	NH6	23.90	25.00	28.75	430	F or W *	SCD 35
75	**H1EM075BB00S**	NH3	26.00	25.00	38.00	640	F or W *	SCD 35
112.5	**H1EM112BB00S**	NH4	32.00	29.50	41.00	920	F	SCD 35
150	**H1EM150BB00S**	NH4	32.00	29.50	41.00	1100	F	SCD 35
225	**H1EM225BB00S**	NJ1	39.50	34.00	51.50	1575	F	SCD 35
300	**H1EM300BB00S**	NJ2	48.50	38.40	59.00	1830	F	SCD 35
500	**H1EM500BB00S**	NJ3	51.50	43.40	66.00	2700	F	SCD 35
750	**H1EM750BB00S**	NJ3	51.50	43.40	66.00	3800	F	SCD 35

*Wall mounting kit and/or drip plate kit required.
Refer to pages 271 to 273 for details.

208 Delta Primary Volts — 480Y/277 Secondary Volts — 60 Hz

kVA	Catalog Number	Case Style (Pages 260 - 267)	Approx. Dimensions (Inches) Width	Depth	Height	Approx. Weight (Lbs.)	Mtg Type W - Wall F - Floor	Wiring Diagram (Pages 276 - 288)
15	**H1EM015BK00S**	NH5	19.40	20.20	21.50	220	F or W *	SCD 35
30	**H1EM030BK00S**	NH6	23.90	25.00	28.75	320	F or W *	SCD 35
45	**H1EM045BK00S**	NH6	23.90	25.00	28.75	430	F or W *	SCD 35
75	**H1EM075BK00S**	NH3	26.00	25.00	38.00	640	F or W *	SCD 35
112.5	**H1EM112BK00S**	NH4	32.00	29.50	41.00	920	F	SCD 35
150	**H1EM150BK00S**	NH4	32.00	29.50	41.00	1100	F	SCD 35
225	**H1EM225BK00S**	NJ1	39.50	34.00	51.50	1575	F	SCD 35
300	**H1EM300BK00S**	NJ2	48.50	38.40	59.00	1830	F	SCD 35
500	**H1EM500BK00S**	NJ3	51.50	43.40	66.00	2700	F	SCD 35
750	**H1EM750BK00S**	NJ3	51.50	43.40	66.00	3800	F	SCD 35

*Wall mounting kit and/or drip plate kit required.
Refer to pages 271 to 273 for details.

480 Delta Primary Volts — 208Y/120 Secondary Volts — 60 Hz

kVA	Catalog Number	Case Style (Pages 260 - 267)	Approx. Dimensions (Inches) Width	Depth	Height	Approx. Weight (Lbs.)	Mtg Type W - Wall F - Floor	Wiring Diagram (Pages 276 - 288)
15	**H1EM015KB00S**	NH5	19.40	20.20	21.50	220	F or W *	SCD 35
30	**H1EM030KB00S**	NH6	23.90	25.00	28.75	320	F or W *	SCD 35
45	**H1EM045KB00S**	NH6	23.90	25.00	28.75	430	F or W *	SCD 35
75	**H1EM075KB00S**	NH3	26.00	25.00	38.00	640	F or W *	SCD 35
112.5	**H1EM112KB00S**	NH4	32.00	29.50	41.00	920	F	SCD 35
150	**H1EM150KB00S**	NH4	32.00	29.50	41.00	1100	F	SCD 35
225	**H1EM225KB00S**	NJ1	39.50	34.00	51.50	1575	F	SCD 35
300	**H1EM300KB00S**	NJ2	48.50	38.40	59.00	1830	F	SCD 35
500	**H1EM500KB00S**	NJ3	51.50	43.40	66.00	2700	F	SCD 35
750	**H1EM750KB00S**	NJ3	51.50	43.40	66.00	3800	F	SCD 35

*Wall mounting kit and/or drip plate kit required.
Refer to pages 271 to 273 for details.

For accessories see pages 271 to 274.

© Hammond Power Solutions Inc.
Data subject to change without notice.

ALUMINUM WOUND, THREE PHASE, SHIELDED
0° PHASE SHIFT

480 Delta Primary Volts 480Y/277 Secondary Volts 60 Hz

kVA	Catalog Number	Case Style (Pages 260 - 267)	Approx. Dimensions (Inches) Width	Depth	Height	Approx. Weight (Lbs.)	Mtg Type W - Wall F - Floor	Wiring Diagram (Pages 276 - 288)
15	**H1EM015KK00S**	NH5	19.40	20.20	21.50	220	F or W *	SCD 35
30	**H1EM030KK00S**	NH6	23.90	25.00	28.75	320	F or W *	SCD 35
45	**H1EM045KK00S**	NH6	23.90	25.00	28.75	430	F or W *	SCD 35
75	**H1EM075KK00S**	NH3	26.00	25.00	38.00	640	F or W *	SCD 35
112.5	**H1EM112KK00S**	NH4	32.00	29.50	41.00	920	F	SCD 35
150	**H1EM150KK00S**	NH4	32.00	29.50	41.00	1100	F	SCD 35
225	**H1EM225KK00S**	NJ1	39.50	34.00	51.50	1575	F	SCD 35
300	**H1EM300KK00S**	NJ2	48.50	38.40	59.00	1830	F	SCD 35
500	**H1EM500KK00S**	NJ3	51.50	43.40	66.00	2700	F	SCD 35
750	**H1EM750KK00S**	NJ3	51.50	43.40	66.00	3800	F	SCD 35

*Wall mounting kit and/or drip plate kit required.
Refer to pages 271 to 273 for details.

600 Delta Primary Volts 208Y/120 Secondary Volts 60 Hz

kVA	Catalog Number	Case Style (Pages 260 - 267)	Approx. Dimensions (Inches) Width	Depth	Height	Approx. Weight (Lbs.)	Mtg Type W - Wall F - Floor	Wiring Diagram (Pages 276 - 288)
15	**H1EM015PB00S**	NH5	19.40	20.20	21.50	220	F or W *	SCD 35
30	**H1EM030PB00S**	NH6	23.90	25.00	28.75	320	F or W *	SCD 35
45	**H1EM045PB00S**	NH6	23.90	25.00	28.75	430	F or W *	SCD 35
75	**H1EM075PB00S**	NH3	26.00	25.00	38.00	640	F or W *	SCD 35
112.5	**H1EM112PB00S**	NH4	32.00	29.50	41.00	920	F	SCD 35
150	**H1EM150PB00S**	NH4	32.00	29.50	41.00	1100	F	SCD 35
225	**H1EM225PB00S**	NJ1	39.50	34.00	51.50	1575	F	SCD 35
300	**H1EM300PB00S**	NJ2	48.50	38.40	59.00	1830	F	SCD 35
500	**H1EM500PB00S**	NJ3	51.50	43.40	66.00	2700	F	SCD 35
750	**H1EM750PB00S**	NJ3	51.50	43.40	66.00	3800	F	SCD 35

*Wall mounting kit and/or drip plate kit required.
Refer to pages 271 to 273 for details.

600 Delta Primary Volts 480Y/277 Secondary Volts 60 Hz

kVA	Catalog Number	Case Style (Pages 260 - 267)	Approx. Dimensions (Inches) Width	Depth	Height	Approx. Weight (Lbs.)	Mtg Type W - Wall F - Floor	Wiring Diagram (Pages 276 - 288)
15	**H1EM015PK00S**	NH5	19.40	20.20	21.50	220	F or W *	SCD 35
30	**H1EM030PK00S**	NH6	23.90	25.00	28.75	320	F or W *	SCD 35
45	**H1EM045PK00S**	NH6	23.90	25.00	28.75	430	F or W *	SCD 35
75	**H1EM075PK00S**	NH3	26.00	25.00	38.00	640	F or W *	SCD 35
112.5	**H1EM112PK00S**	NH4	32.00	29.50	41.00	920	F	SCD 35
150	**H1EM150PK00S**	NH4	32.00	29.50	41.00	1100	F	SCD 35
225	**H1EM225PK00S**	NJ1	39.50	34.00	51.50	1575	F	SCD 35
300	**H1EM300PK00S**	NJ2	48.50	38.40	59.00	1830	F	SCD 35
500	**H1EM500PK00S**	NJ3	51.50	43.40	66.00	2700	F	SCD 35
750	**H1EM750PB00S**	NJ3	51.50	43.40	66.00	3800	F	SCD 35

*Wall mounting kit and/or drip plate kit required.
Refer to pages 271 to 273 for details.

For accessories see pages 271 to 274.
© Hammond Power Solutions Inc.
Data subject to change without notice.

ALUMINUM WOUND, THREE PHASE, SHIELDED -30° PHASE SHIFT

208 Wye Primary Volts 208Y/120 Secondary Volts 60 Hz

kVA	Catalog Number	Case Style (Pages 260 - 267)	Approx. Dimensions (Inches) Width	Depth	Height	Approx. Weight (Lbs.)	Mtg Type W - Wall F - Floor	Wiring Diagram (Pages 276 - 288)
15	**H1EM015BB30S**	NH5	19.40	20.20	21.50	220	F or W *	SCD 35
30	**H1EM030BB30S**	NH6	23.90	25.00	28.75	320	F or W *	SCD 35
45	**H1EM045BB30S**	NH6	23.90	25.00	28.75	430	F or W *	SCD 35
75	**H1EM075BB30S**	NH3	26.00	25.00	38.00	640	F or W *	SCD 35
112.5	**H1EM112BB30S**	NH4	32.00	29.50	41.00	920	F	SCD 35
150	**H1EM150BB30S**	NH4	32.00	29.50	41.00	1100	F	SCD 35
225	**H1EM225BB30S**	NJ1	39.50	34.00	51.50	1575	F	SCD 35
300	**H1EM300BB30S**	NJ2	48.50	38.40	59.00	1830	F	SCD 35
500	**H1EM500BB30S**	NJ3	51.50	43.40	66.00	2700	F	SCD 35
750	**H1EM750BB30S**	NJ3	51.50	43.40	66.00	3800	F	SCD 35

*Wall mounting kit and/or drip plate kit required.
Refer to pages 271 to 273 for details.

208 Wye Primary Volts 480Y/277 Secondary Volts 60 Hz

kVA	Catalog Number	Case Style (Pages 260 - 267)	Approx. Dimensions (Inches) Width	Depth	Height	Approx. Weight (Lbs.)	Mtg Type W - Wall F - Floor	Wiring Diagram (Pages 276 - 288)
15	**H1EM015BK30S**	NH5	19.40	20.20	21.50	220	F or W *	SCD 35
30	**H1EM030BK30S**	NH6	23.90	25.00	28.75	320	F or W *	SCD 35
45	**H1EM045BK30S**	NH6	23.90	25.00	28.75	430	F or W *	SCD 35
75	**H1EM075BK30S**	NH3	26.00	25.00	38.00	640	F or W *	SCD 35
112.5	**H1EM112BK30S**	NH4	32.00	29.50	41.00	920	F	SCD 35
150	**H1EM150BK30S**	NH4	32.00	29.50	41.00	1100	F	SCD 35
225	**H1EM225BK30S**	NJ1	39.50	34.00	51.50	1575	F	SCD 35
300	**H1EM300BK30S**	NJ2	48.50	38.40	59.00	1830	F	SCD 35
500	**H1EM500BK30S**	NJ3	51.50	43.40	66.00	3200	F	SCD 35
750	**H1EM750BK30S**	NJ3	51.50	43.40	66.00	3800	F	SCD 35

*Wall mounting kit and/or drip plate kit required.
Refer to pages 271 to 273 for details.

480 Wye Primary Volts 208Y/120 Secondary Volts 60 Hz

kVA	Catalog Number	Case Style (Pages 260 - 267)	Approx. Dimensions (Inches) Width	Depth	Height	Approx. Weight (Lbs.)	Mtg Type W - Wall F - Floor	Wiring Diagram (Pages 276 - 288)
15	**H1EM015KB30S**	NH5	19.40	20.20	21.50	220	F or W *	SCD 35
30	**H1EM030KB30S**	NH6	23.90	25.00	28.75	320	F or W *	SCD 35
45	**H1EM045KB30S**	NH6	23.90	25.00	28.75	430	F or W *	SCD 35
75	**H1EM075KB30S**	NH3	26.00	25.00	38.00	640	F or W *	SCD 35
112.5	**H1EM112KB30S**	NH4	32.00	29.50	41.00	920	F	SCD 35
150	**H1EM150KB30S**	NH4	32.00	29.50	41.00	1100	F	SCD 35
225	**H1EM225KB30S**	NJ1	39.50	34.00	51.50	1575	F	SCD 35
300	**H1EM300KB30S**	NJ2	48.50	38.40	59.00	1830	F	SCD 35
500	**H1EM500KB30S**	NJ3	51.50	43.40	66.00	2700	F	SCD 35
750	**H1EM750KB30S**	NJ3	51.50	43.40	66.00	3800	F	SCD 35

*Wall mounting kit and/or drip plate kit required.
Refer to pages 271 to 273 for details.

For accessories see pages 271 to 274.

© Hammond Power Solutions Inc.
Data subject to change without notice.

ALUMINUM WOUND, THREE PHASE, SHIELDED -30° PHASE SHIFT

480 Wye Primary Volts 480Y/277 Secondary Volts 60 Hz

kVA	Catalog Number	Case Style (Pages 260 - 267)	Approx. Dimensions (Inches) Width	Depth	Height	Approx. Weight (Lbs.)	Mtg Type W - Wall F - Floor	Wiring Diagram (Pages 276 - 288)
15	**H1EM015KK30S**	NH5	19.40	20.20	21.50	220	F or W *	SCD 35
30	**H1EM030KK30S**	NH6	23.90	25.00	28.75	320	F or W *	SCD 35
45	**H1EM045KK30S**	NH6	23.90	25.00	28.75	430	F or W *	SCD 35
75	**H1EM075KK30S**	NH3	26.00	25.00	38.00	640	F or W *	SCD 35
112.5	**H1EM112KK30S**	NH4	32.00	29.50	41.00	920	F	SCD 35
150	**H1EM150KK30S**	NH4	32.00	29.50	41.00	1100	F	SCD 35
225	**H1EM225KK30S**	NJ1	39.50	34.00	51.50	1575	F	SCD 35
300	**H1EM300KK30S**	NJ2	48.50	38.40	59.00	1830	F	SCD 35
500	**H1EM500KK30S**	NJ3	51.50	43.40	66.00	2700	F	SCD 35
750	**H1EM750KK30S**	NJ3	51.50	43.40	66.00	3800	F	SCD 35

*Wall mounting kit and/or drip plate kit required.
Refer to pages 271 to 273 for details.

600 Wye Primary Volts 208Y/120 Secondary Volts 60 Hz

kVA	Catalog Number	Case Style (Pages 260 - 267)	Approx. Dimensions (Inches) Width	Depth	Height	Approx. Weight (Lbs.)	Mtg Type W - Wall F - Floor	Wiring Diagram (Pages 276 - 288)
15	**H1EM015PB30S**	NH5	19.40	20.20	21.50	220	F or W *	SCD 35
30	**H1EM030PB30S**	NH6	23.90	25.00	28.75	320	F or W *	SCD 35
45	**H1EM045PB30S**	NH6	23.90	25.00	28.75	430	F or W *	SCD 35
75	**H1EM075PB30S**	NH3	26.00	25.00	38.00	640	F or W *	SCD 35
112.5	**H1EM112PB30S**	NH4	32.00	29.50	41.00	920	F	SCD 35
150	**H1EM150PB30S**	NH4	32.00	29.50	41.00	1100	F	SCD 35
225	**H1EM225PB30S**	NJ1	39.50	34.00	51.50	1575	F	SCD 35
300	**H1EM300PB30S**	NJ2	48.50	38.40	59.00	1830	F	SCD 35
500	**H1EM500PB30S**	NJ3	51.50	43.40	66.00	2700	F	SCD 35
750	**H1EM750PB30S**	NJ3	51.50	43.40	66.00	3800	F	SCD 35

*Wall mounting kit and/or drip plate kit required.
Refer to pages 271 to 273 for details.

600 Wye Primary Volts 480Y/277 Secondary Volts 60 Hz

kVA	Catalog Number	Case Style (Pages 260 - 267)	Approx. Dimensions (Inches) Width	Depth	Height	Approx. Weight (Lbs.)	Mtg Type W - Wall F - Floor	Wiring Diagram (Pages 276 - 288)
15	**H1EM015PK30S**	NH5	19.40	20.20	21.50	220	F or W *	SCD 35
30	**H1EM030PK30S**	NH6	23.90	25.00	28.75	320	F or W *	SCD 35
45	**H1EM045PK30S**	NH6	23.90	25.00	28.75	430	F or W *	SCD 35
75	**H1EM075PK30S**	NH3	26.00	25.00	38.00	640	F or W *	SCD 35
112.5	**H1EM112PK30S**	NH4	32.00	29.50	41.00	920	F	SCD 35
150	**H1EM150PK30S**	NH4	32.00	29.50	41.00	1100	F	SCD 35
225	**H1EM225PK30S**	NJ1	39.50	34.00	51.50	1575	F	SCD 35
300	**H1EM300PK30S**	NJ2	48.50	38.40	59.00	1830	F	SCD 35
500	**H1EM500PK30S**	NJ3	51.50	43.40	66.00	2700	F	SCD 35
750	**H1EM500PK30S**	NJ3	51.50	43.40	66.00	3800	F	SCD 35

*Wall mounting kit and/or drip plate kit required.
Refer to pages 271 to 273 for details.

For accessories see pages 271 to 274.
© Hammond Power Solutions Inc.
Data subject to change without notice.

COPPER WOUND, THREE PHASE, SHIELDED
0° PHASE SHIFT

208 Delta Primary Volts 208Y/120 Secondary Volts 60 Hz

kVA	Catalog Number	Case Style (Pages 260 - 267)	Approx. Dimensions (Inches) Width	Depth	Height	Approx. Weight (Lbs.)	Mtg Type W - Wall F - Floor	Wiring Diagram (Pages 276 - 288)
15	**H1EM015BB00**	NH5	19.40	20.20	21.50	240	F or W *	SCD 35
30	**H1EM030BB00**	NH6	23.90	25.00	28.75	360	F or W *	SCD 35
45	**H1EM045BB00**	NH6	23.90	25.00	28.75	465	F or W *	SCD 35
75	**H1EM075BB00**	NH3	26.00	25.00	38.00	740	F or W *	SCD 35
112.5	**H1EM112BB00**	NH4	32.00	29.50	41.00	1100	F	SCD 35
150	**H1EM150BB00**	NH4	32.00	29.50	41.00	1350	F	SCD 35
225	**H1EM225BB00**	NJ1	39.50	34.00	51.50	1800	F	SCD 35
300	**H1EM300BB00**	NJ2	48.50	38.40	59.00	2250	F	SCD 35
500	**H1EM500BB00**	NJ3	51.50	43.40	66.00	3000	F	SCD 35
750	**H1EM750BB00**	NJ3	51.50	43.40	66.00	4200	F	SCD 35

*Wall mounting kit and/or drip plate kit required.
Refer to pages 271 to 273 for details.

208 Delta Primary Volts 480Y/277 Secondary Volts 60 Hz

kVA	Catalog Number	Case Style (Pages 260 - 267)	Approx. Dimensions (Inches) Width	Depth	Height	Approx. Weight (Lbs.)	Mtg Type W - Wall F - Floor	Wiring Diagram (Pages 276 - 288)
15	**H1EM015BK00**	NH5	19.40	20.20	21.50	240	F or W *	SCD 35
30	**H1EM030BK00**	NH6	23.90	25.00	28.75	360	F or W *	SCD 35
45	**H1EM045BK00**	NH6	23.90	25.00	28.75	465	F or W *	SCD 35
75	**H1EM075BK00**	NH3	26.00	25.00	38.00	740	F or W *	SCD 35
112.5	**H1EM112BK00**	NH4	32.00	29.50	41.00	1100	F	SCD 35
150	**H1EM150BK00**	NH4	32.00	29.50	41.00	1350	F	SCD 35
225	**H1EM225BK00**	NJ1	39.50	34.00	51.50	1800	F	SCD 35
300	**H1EM300BK00**	NJ2	48.50	38.40	59.00	2250	F	SCD 35
500	**H1EM500BK00**	NJ3	51.50	43.40	66.00	3000	F	SCD 35
750	**H1EM750BK00**	NJ3	51.50	43.40	66.00	4200	F	SCD 35

*Wall mounting kit and/or drip plate kit required.
Refer to pages 271 to 273 for details.

480 Delta Primary Volts 208Y/120 Secondary Volts 60 Hz

kVA	Catalog Number	Case Style (Pages 260 - 267)	Approx. Dimensions (Inches) Width	Depth	Height	Approx. Weight (Lbs.)	Mtg Type W - Wall F - Floor	Wiring Diagram (Pages 276 - 288)
15	**H1EM015KB00**	NH5	19.40	20.20	21.50	240	F or W *	SCD 35
30	**H1EM030KB00**	NH6	23.90	25.00	28.75	360	F or W *	SCD 35
45	**H1EM045KB00**	NH6	23.90	25.00	28.75	465	F or W *	SCD 35
75	**H1EM075KB00**	NH3	26.00	25.00	38.00	740	F or W *	SCD 35
112.5	**H1EM112KB00**	NH4	32.00	29.50	41.00	1100	F	SCD 35
150	**H1EM150KB00**	NH4	32.00	29.50	41.00	1350	F	SCD 35
225	**H1EM225KB00**	NJ1	39.50	34.00	51.50	1800	F	SCD 35
300	**H1EM300KB00**	NJ2	48.50	38.40	59.00	2250	F	SCD 35
500	**H1EM500KB00**	NJ3	51.50	43.40	66.00	3000	F	SCD 35
750	**H1EM750KB00**	NJ3	51.50	43.40	66.00	4200	F	SCD 35

*Wall mounting kit and/or drip plate kit required.
Refer to pages 271 to 273 for details.

For accessories see pages 271 to 274.

© Hammond Power Solutions Inc.
Data subject to change without notice.

COPPER WOUND, THREE PHASE, SHIELDED
0° PHASE SHIFT

480 Delta Primary Volts 480Y/277 Secondary Volts 60 Hz

kVA	Catalog Number	Case Style (Pages 260 - 267)	Approx. Dimensions (Inches) Width	Depth	Height	Approx. Weight (Lbs.)	Mtg Type W - Wall F - Floor	Wiring Diagram (Pages 276 - 288)
15	**H1EM015KK00**	NH5	19.40	20.20	21.50	240	F or W *	SCD 35
30	**H1EM030KK00**	NH6	23.90	25.00	28.75	360	F or W *	SCD 35
45	**H1EM045KK00**	NH6	23.90	25.00	28.75	465	F or W *	SCD 35
75	**H1EM075KK00**	NH3	26.00	25.00	38.00	740	F or W *	SCD 35
112.5	**H1EM112KK00**	NH4	32.00	29.50	41.00	1100	F	SCD 35
150	**H1EM150KK00**	NH4	32.00	29.50	41.00	1350	F	SCD 35
225	**H1EM225KK00**	NJ1	39.50	34.00	51.50	1800	F	SCD 35
300	**H1EM300KK00**	NJ2	48.50	38.40	59.00	2250	F	SCD 35
500	**H1EM500KK00**	NJ3	51.50	43.40	66.00	3000	F	SCD 35
750	**H1EM750KK00**	NJ3	51.50	43.40	66.00	4200	F	SCD 35

*Wall mounting kit and/or drip plate kit required.
Refer to pages 271 to 273 for details.

600 Delta Primary Volts 208Y/120 Secondary Volts 60 Hz

kVA	Catalog Number	Case Style (Pages 260 - 267)	Approx. Dimensions (Inches) Width	Depth	Height	Approx. Weight (Lbs.)	Mtg Type W - Wall F - Floor	Wiring Diagram (Pages 276 - 288)
15	**H1EM015PB00**	NH5	19.40	20.20	21.50	240	F or W *	SCD 35
30	**H1EM030PB00**	NH6	23.90	25.00	28.75	360	F or W *	SCD 35
45	**H1EM045PB00**	NH6	23.90	25.00	28.75	465	F or W *	SCD 35
75	**H1EM075PB00**	NH3	26.00	25.00	38.00	740	F or W *	SCD 35
112.5	**H1EM112PB00**	NH4	32.00	29.50	41.00	1100	F	SCD 35
150	**H1EM150PB00**	NH4	32.00	29.50	41.00	1350	F	SCD 35
225	**H1EM225PB00**	NJ1	39.50	34.00	51.50	1800	F	SCD 35
300	**H1EM300PB00**	NJ2	48.50	38.40	59.00	2250	F	SCD 35
500	**H1EM500PB00**	NJ3	51.50	43.40	66.00	3000	F	SCD 35
750	**H1EM750PB00**	NJ3	51.50	43.40	66.00	4200	F	SCD 35

*Wall mounting kit and/or drip plate kit required.
Refer to pages 271 to 273 for details.

600 Delta Primary Volts 480Y/277 Secondary Volts 60 Hz

kVA	Catalog Number	Case Style (Pages 260 - 267)	Approx. Dimensions (Inches) Width	Depth	Height	Approx. Weight (Lbs.)	Mtg Type W - Wall F - Floor	Wiring Diagram (Pages 276 - 288)
15	**H1EM015PK00**	NH5	19.40	20.20	21.50	240	F or W *	SCD 35
30	**H1EM030PK00**	NH6	23.90	25.00	28.75	360	F or W *	SCD 35
45	**H1EM045PK00**	NH6	23.90	25.00	28.75	465	F or W *	SCD 35
75	**H1EM075PK00**	NH3	26.00	25.00	38.00	740	F or W *	SCD 35
112.5	**H1EM112PK00**	NH4	32.00	29.50	41.00	1100	F	SCD 35
150	**H1EM150PK00**	NH4	32.00	29.50	41.00	1350	F	SCD 35
225	**H1EM225PK00**	NJ1	39.50	34.00	51.50	1800	F	SCD 35
300	**H1EM300PK00**	NJ2	48.50	38.40	59.00	2250	F	SCD 35
500	**H1EM500PK00**	NJ3	51.50	43.40	66.00	3000	F	SCD 35
750	**H1EM750PK00**	NJ3	51.50	43.40	66.00	4200	F	SCD 35

*Wall mounting kit and/or drip plate kit required.
Refer to pages 271 to 273 for details.

For accessories see pages 271 to 274.
© Hammond Power Solutions Inc.
Data subject to change without notice.

COPPER WOUND, THREE PHASE, SHIELDED -30° PHASE SHIFT

208 Wye Primary Volts 208Y/120 Secondary Volts 60 Hz

kVA	Catalog Number	Case Style (Pages 260 - 267)	Approx. Dimensions (Inches) Width	Depth	Height	Approx. Weight (Lbs.)	Mtg Type W - Wall F - Floor	Wiring Diagram (Pages 276 - 288)
15	**H1EM015BB30**	NH5	19.40	20.20	21.50	240	F or W *	SCD 35
30	**H1EM030BB30**	NH6	23.90	25.00	28.75	360	F or W *	SCD 35
45	**H1EM045BB30**	NH6	23.90	25.00	28.75	465	F or W *	SCD 35
75	**H1EM075BB30**	NH3	26.00	25.00	38.00	740	F or W *	SCD 35
112.5	**H1EM112BB30**	NH4	32.00	29.50	41.00	1100	F	SCD 35
150	**H1EM150BB30**	NH4	32.00	29.50	41.00	1350	F	SCD 35
225	**H1EM225BB30**	NJ1	39.50	34.00	51.50	1800	F	SCD 35
300	**H1EM300BB30**	NJ2	48.50	38.40	59.00	2250	F	SCD 35
500	**H1EM500BB30**	NJ3	51.50	43.40	66.00	3000	F	SCD 35
750	**H1EM750BB30**	NJ3	51.50	43.40	66.00	4200	F	SCD 35

*Wall mounting kit and/or drip plate kit required.
Refer to pages 271 to 273 for details.

208 Wye Primary Volts 480Y/277 Secondary Volts 60 Hz

kVA	Catalog Number	Case Style (Pages 260 - 267)	Approx. Dimensions (Inches) Width	Depth	Height	Approx. Weight (Lbs.)	Mtg Type W - Wall F - Floor	Wiring Diagram (Pages 276 - 288)
15	**H1EM015BK30**	NH5	19.40	20.20	21.50	240	F or W *	SCD 35
30	**H1EM030BK30**	NH6	23.90	25.00	28.75	360	F or W *	SCD 35
45	**H1EM045BK30**	NH6	23.90	25.00	28.75	465	F or W *	SCD 35
75	**H1EM075BK30**	NH3	26.00	25.00	38.00	740	F or W *	SCD 35
112.5	**H1EM112BK30**	NH4	32.00	29.50	41.00	1100	F	SCD 35
150	**H1EM150BK30**	NH4	32.00	29.50	41.00	1350	F	SCD 35
225	**H1EM225BK30**	NJ1	39.50	34.00	51.50	1800	F	SCD 35
300	**H1EM300BK30**	NJ2	48.50	38.40	59.00	2250	F	SCD 35
500	**H1EM500BK30**	NJ3	51.50	43.40	66.00	3000	F	SCD 35
750	**H1EM750BK30**	NJ3	51.50	43.40	66.00	4200	F	SCD 35

*Wall mounting kit and/or drip plate kit required.
Refer to pages 271 to 273 for details.

480 Wye Primary Volts 208Y/120 Secondary Volts 60 Hz

kVA	Catalog Number	Case Style (Pages 260 - 267)	Approx. Dimensions (Inches) Width	Depth	Height	Approx. Weight (Lbs.)	Mtg Type W - Wall F - Floor	Wiring Diagram (Pages 276 - 288)
15	**H1EM015KB30**	NH5	19.40	20.20	21.50	240	F or W *	SCD 35
30	**H1EM030KB30**	NH6	23.90	25.00	28.75	360	F or W *	SCD 35
45	**H1EM045KB30**	NH6	23.90	25.00	28.75	465	F or W *	SCD 35
75	**H1EM075KB30**	NH3	26.00	25.00	38.00	740	F or W *	SCD 35
112.5	**H1EM112KB30**	NH4	32.00	29.50	41.00	1100	F	SCD 35
150	**H1EM150KB30**	NH4	32.00	29.50	41.00	1350	F	SCD 35
225	**H1EM225KB30**	NJ1	39.50	34.00	51.50	1800	F	SCD 35
300	**H1EM300KB30**	NJ2	48.50	38.40	59.00	2250	F	SCD 35
500	**H1EM500KB30**	NJ3	51.50	43.40	66.00	3000	F	SCD 35
750	**H1EM750KB30**	NJ3	51.50	43.40	66.00	4200	F	SCD 35

*Wall mounting kit and/or drip plate kit required.
Refer to pages 271 to 273 for details.

For accessories see pages 271 to 274.
© Hammond Power Solutions Inc.
Data subject to change without notice.

COPPER WOUND, THREE PHASE, SHIELDED -30° PHASE SHIFT

480 Wye Primary Volts 480Y/277 Secondary Volts 60 Hz

kVA	Catalog Number	Case Style (Pages 260 - 267)	Approx. Dimensions (Inches) Width	Depth	Height	Approx. Weight (Lbs.)	Mtg Type W - Wall F - Floor	Wiring Diagram (Pages 276 - 288)
15	**H1EM015KK30**	NH5	19.40	20.20	21.50	240	F or W *	SCD 35
30	**H1EM030KK30**	NH6	23.90	25.00	28.75	360	F or W *	SCD 35
45	**H1EM045KK30**	NH6	23.90	25.00	28.75	465	F or W *	SCD 35
75	**H1EM075KK30**	NH3	26.00	25.00	38.00	740	F or W *	SCD 35
112.5	**H1EM112KK30**	NH4	32.00	29.50	41.00	1100	F	SCD 35
150	**H1EM150KK30**	NH4	32.00	29.50	41.00	1350	F	SCD 35
225	**H1EM225KK30**	NJ1	39.50	34.00	51.50	1800	F	SCD 35
300	**H1EM300KK30**	NJ2	48.50	38.40	59.00	2250	F	SCD 35
500	**H1EM500KK30**	NJ3	51.50	43.40	66.00	3000	F	SCD 35
750	**H1EM750KK30**	NJ3	51.50	43.40	66.00	4200	F	SCD 35

*Wall mounting kit and/or drip plate kit required.
Refer to pages 271 to 273 for details.

600 Wye Primary Volts 208Y/120 Secondary Volts 60 Hz

kVA	Catalog Number	Case Style (Pages 260 - 267)	Approx. Dimensions (Inches) Width	Depth	Height	Approx. Weight (Lbs.)	Mtg Type W - Wall F - Floor	Wiring Diagram (Pages 276 - 288)
15	**H1EM015PB30**	NH5	19.40	20.20	21.50	240	F or W *	SCD 35
30	**H1EM030PB30**	NH6	23.90	25.00	28.75	360	F or W *	SCD 35
45	**H1EM045PB30**	NH6	23.90	25.00	28.75	465	F or W *	SCD 35
75	**H1EM075PB30**	NH3	26.00	25.00	38.00	740	F or W *	SCD 35
112.5	**H1EM112PB30**	NH4	32.00	29.50	41.00	1100	F	SCD 35
150	**H1EM150PB30**	NH4	32.00	29.50	41.00	1350	F	SCD 35
225	**H1EM225PB30**	NJ1	39.50	34.00	51.50	1800	F	SCD 35
300	**H1EM300PB30**	NJ2	48.50	38.40	59.00	2250	F	SCD 35
500	**H1EM500PB30**	NJ3	51.50	43.40	66.00	3000	F	SCD 35
750	**H1EM750PB30**	NJ3	51.50	43.40	66.00	4200	F	SCD 35

*Wall mounting kit and/or drip plate kit required.
Refer to pages 271 to 273 for details.

600 Wye Primary Volts 480Y/277 Secondary Volts 60 Hz

kVA	Catalog Number	Case Style (Pages 260 - 267)	Approx. Dimensions (Inches) Width	Depth	Height	Approx. Weight (Lbs.)	Mtg Type W - Wall F - Floor	Wiring Diagram (Pages 276 - 288)
15	**H1EM015PK30**	NH5	19.40	20.20	21.50	240	F or W *	SCD 35
30	**H1EM030PK30**	NH6	23.90	25.00	28.75	360	F or W *	SCD 35
45	**H1EM045PK30**	NH6	23.90	25.00	28.75	465	F or W *	SCD 35
75	**H1EM075PK30**	NH3	26.00	25.00	38.00	740	F or W *	SCD 35
112.5	**H1EM112PK30**	NH4	32.00	29.50	41.00	1100	F	SCD 35
150	**H1EM150PK30**	NH4	32.00	29.50	41.00	1350	F	SCD 35
225	**H1EM225PK30**	NJ1	39.50	34.00	51.50	1800	F	SCD 35
300	**H1EM300PK30**	NJ2	48.50	38.40	59.00	2250	F	SCD 35
500	**H1EM500PK30**	NJ3	51.50	43.40	66.00	3000	F	SCD 35
750	**H1EM750PK30**	NJ3	51.50	43.40	66.00	4200	F	SCD 35

*Wall mounting kit and/or drip plate kit required.
Refer to pages 271 to 273 for details.

For accessories see pages 271 to 274.
© Hammond Power Solutions Inc.
Data subject to change without notice.

HPS SuperCenturion®

600 VOLT CLASS ENERGY EFFICIENT HARMONIC MITIGATING TRANSFORMERS

Harmonic Mitigating Transformer Efficiencies:

The HPS Centurion energy efficient, harmonic mitigating transformer with zero sequence flux cancellation technology is specifically designed to treat the harmonics generated by computer equipment and other non-linear, power electronic loads. Combining zero sequence flux cancellation with phase shifting treats 3rd, 5th, 7th, 9th, 15th, 17th and 19th, harmonics within its secondary windings. Typical applications of severe non-linear loading conditions include data centers, internet-service providers, telecom sites, call centers, broadcast centers, etc.

HPS SuperCenturion (Part Number Prefix S1EM or S2EM)

- **Exceeds DOE 10 CFR Part 431** and **C802.2** efficiencies at **35%** of rated load.
- Efficiency performance will meet the **NEMA Premium®** guidelines; **30% lower losses** than **DOE 10 CFR Part 431** and (if applicable) **C802.2** efficiency standards; when measured under a linear load profile.
- Efficiencies will exceed **DOE 10 CFR Part 431** and (if applicable) **C802.2** efficiency standards; at an operating range from **35% to 65%** of rated load when measured under a **non-linear** load profile up to **K20**.
- Copper & Aluminum Available.

For accessories see pages 271 to 274.
© Hammond Power Solutions Inc.
Data subject to change without notice.

HPS SuperCenturion®

600 VOLT CLASS ENERGY EFFICIENT HARMONIC MITIGATING TRANSFORMERS

THREE PHASE STANDARD SPECIFICATIONS

15 to 45 kVA

75 TO 750 KVA

	15 to 45 kVA	75 to 750 kVA
Efficiency	Efficiency performance will meet the **NEMA Premium®** guidelines; **30% lower losses** than DOE 10 CFR Part 431 and (if applicable) C802.2 efficiency standards; when measured under a linear load profile. Efficiencies will exceed DOE 10 CFR Part 431 and (if applicable) C802.2 efficiency standards; at an operating range from **35% to 65%** of rated load when measured under a **non-linear** load profile up to **K20**.	
UL Listed	File: E112313	File: E112313
CSA Certified	File: LR3902	File: LR3902
Frequency	60 Hz	60 Hz
Insulation System	220°C (150°C rise) 200°C (130°C rise) on 15 & 30kVA copper (optional 115°C and 80°C rise available)	220°C (150°C rise) (optional 115°C and 80°C rise available)
Electrostatic Shield	60dB Common Mode - typical	60dB Common Mode - typical
Enclosure Type	Heavy Duty Ventilated Type 3R Optional Type 4, 4X (stainless steel) and 12.	Heavy Duty Ventilated Type 3R Optional Type 4, 4X (stainless steel) and 12.
Enclosure Finish	ANSI 61 Grey, UL50	ANSI 61 Grey, UL50
Neutral	Neutral terminal for field connection (on applicable units).	Neutral terminal for field connection (on applicable units).
Standard Primary Taps	Refer to wiring diagrams for details.	Refer to wiring diagrams for details.
Termination	Front accessible separate high and low voltage terminals; connectors suitable for aluminum and copper are provided for easy cable installation.	Front accessible separate high and low voltage terminals; connectors suitable for aluminum and copper are provided for easy cable installation.
Conduit Knock-Outs	Standard on all units.	Standard on 75 kVA & 150 kVA units.
Impedance	Typically 2.5% to 6.5%	Typically 2.5% to 6.5%
Mounting	Floor or wall/ceiling mounting available. Refer to selection tables for details.	Floor or wall/ceiling mounting available. Refer to selection tables for details.
Sound level	Meets NEMA ST-20 standards. **(Optional low noise units available)**	Meets NEMA ST-20 standards. **(Optional low noise units available)**

*** Optional TVSS available. Dual Output option also available. Features as listed above may differ. Contact sales for more details.**

For accessories see pages 271 to 274.

© Hammond Power Solutions Inc.

Data subject to change without notice.

ALUMINUM WOUND, THREE PHASE, SHIELDED, 0° PHASE SHIFT

208 Delta Primary Volts 208Y/120 Secondary Volts 60 Hz

kVA	Catalog Number	Case Style (Pages 260 - 267)	Approx. Dimensions (Inches) Width	Depth	Height	Approx. Weight (Lbs.)	Mtg Type W - Wall F - Floor	Wiring Diagram (Pages 276 - 288)
15	**S1EM015BB00S**	NH5	19.40	20.20	21.50	250	F or W *	SCD 35
30	**S1EM030BB00S**	NH6	23.90	25.00	28.75	350	F or W *	SCD 35
45	**S1EM045BB00S**	NH3	26.00	25.00	38.00	460	F or W *	SCD 35
75	**S1EM075BB00S**	NH4	32.00	29.50	41.00	650	F	SCD 35
112.5	**S1EM112BB00S**	NH4	32.00	29.50	41.00	960	F	SCD 35
150	**S1EM150BB00S**	NH4	32.00	29.50	41.00	1210	F	SCD 35
225	**S1EM225BB00S**	NJ2	48.50	38.40	59.00	1970	F	SCD 35
300	**S1EM300BB00S**	NJ2	48.50	38.40	59.00	2590	F	SCD 35
500	**S1EM500BB00S**	NJ3	51.50	43.40	66.00	4460	F	SCD 35
750	**S1EM750BB00S**	NJ6	64.00	57.40	71.00	6260	F	SCD 35

*Wall mounting kit and/or drip plate kit required.
Refer to pages 271 to 273 for details.

208 Delta Primary Volts 480Y/277 Secondary Volts 60 Hz

kVA	Catalog Number	Case Style (Pages 260 - 267)	Approx. Dimensions (Inches) Width	Depth	Height	Approx. Weight (Lbs.)	Mtg Type W - Wall F - Floor	Wiring Diagram (Pages 276 - 288)
15	**S1EM015BK00S**	NH5	19.40	20.20	21.50	250	F or W *	SCD 35
30	**S1EM030BK00S**	NH6	23.90	25.00	28.75	350	F or W *	SCD 35
45	**S1EM045BK00S**	NH3	26.00	25.00	38.00	460	F or W *	SCD 35
75	**S1EM075BK00S**	NH4	32.00	29.50	41.00	650	F	SCD 35
112.5	**S1EM112BK00S**	NH4	32.00	29.50	41.00	960	F	SCD 35
150	**S1EM150BK00S**	NH4	32.00	29.50	41.00	1210	F	SCD 35
225	**S1EM225BK00S**	NJ2	48.50	38.40	59.00	1970	F	SCD 35
300	**S1EM300BK00S**	NJ2	48.50	38.40	59.00	2590	F	SCD 35
500	**S1EM500BK00S**	NJ3	51.50	43.40	66.00	4460	F	SCD 35
750	**S1EM750BK00S**	NJ6	64.00	57.40	71.00	6260	F	SCD 35

*Wall mounting kit and/or drip plate kit required.
Refer to pages 271 to 273 for details.

480 Delta Primary Volts 208Y/120 Secondary Volts 60 Hz

kVA	Catalog Number	Case Style (Pages 260 - 267)	Approx. Dimensions (Inches) Width	Depth	Height	Approx. Weight (Lbs.)	Mtg Type W - Wall F - Floor	Wiring Diagram (Pages 276 - 288)
15	**S1EM015KB00S**	NH5	19.40	20.20	21.50	250	F or W *	SCD 35
30	**S1EM030KB00S**	NH6	23.90	25.00	28.75	350	F or W *	SCD 35
45	**S1EM045KB00S**	NH3	26.00	25.00	38.00	460	F or W *	SCD 35
75	**S1EM075KB00S**	NH4	32.00	29.50	41.00	650	F	SCD 35
112.5	**S1EM112KB00S**	NH4	32.00	29.50	41.00	960	F	SCD 35
150	**S1EM150KB00S**	NH4	32.00	29.50	41.00	1210	F	SCD 35
225	**S1EM225KB00S**	NJ2	48.50	38.40	59.00	1970	F	SCD 35
300	**S1EM300KB00S**	NJ2	48.50	38.40	59.00	2590	F	SCD 35
500	**S1EM500KB00S**	NJ3	51.50	43.40	66.00	4460	F	SCD 35
750	**S1EM750KB00S**	NJ6	64.00	57.40	71.00	6260	F	SCD 35

*Wall mounting kit and/or drip plate kit required.
Refer to pages 271 to 273 for details.

For accessories see pages 271 to 274.

© Hammond Power Solutions Inc.
Data subject to change without notice.

ALUMINUM WOUND, THREE PHASE, SHIELDED, 0° PHASE SHIFT

480 Delta Primary Volts 480Y/277 Secondary Volts 60 Hz

kVA	Catalog Number	Case Style (Pages 260 - 267)	Approx. Dimensions (Inches) Width	Depth	Height	Approx. Weight (Lbs.)	Mtg Type W - Wall F - Floor	Wiring Diagram (Pages 276 - 288)
15	**S1EM015KK00S**	NH5	19.40	20.20	21.50	250	F or W *	SCD 35
30	**S1EM030KK00S**	NH6	23.90	25.00	28.75	350	F or W *	SCD 35
45	**S1EM045KK00S**	NH3	26.00	25.00	38.00	460	F or W *	SCD 35
75	**S1EM075KK00S**	NH4	32.00	29.50	41.00	650	F	SCD 35
112.5	**S1EM112KK00S**	NH4	32.00	29.50	41.00	960	F	SCD 35
150	**S1EM150KK00S**	NH4	32.00	29.50	41.00	1210	F	SCD 35
225	**S1EM225KK00S**	NJ2	48.50	38.40	59.00	1970	F	SCD 35
300	**S1EM300KK00S**	NJ2	48.50	38.40	59.00	2590	F	SCD 35
500	**S1EM500KK00S**	NJ3	51.50	43.40	66.00	4460	F	SCD 35
750	**S1EM750KK00S**	NJ6	64.00	57.40	71.00	6260	F	SCD 35

*Wall mounting kit and/or drip plate kit required.
Refer to pages 271 to 273 for details.

600 Delta Primary Volts 208Y/120 Secondary Volts 60 Hz

kVA	Catalog Number	Case Style (Pages 260 - 267)	Approx. Dimensions (Inches) Width	Depth	Height	Approx. Weight (Lbs.)	Mtg Type W - Wall F - Floor	Wiring Diagram (Pages 276 - 288)
15	**S1EM015PB00S**	NH5	19.40	20.20	21.50	250	F or W *	SCD 35
30	**S1EM030PB00S**	NH6	23.90	25.00	28.75	350	F or W *	SCD 35
45	**S1EM045PB00S**	NH3	26.00	25.00	38.00	460	F or W *	SCD 35
75	**S1EM075PB00S**	NH4	32.00	29.50	41.00	650	F	SCD 35
112.5	**S1EM112PB00S**	NH4	32.00	29.50	41.00	960	F	SCD 35
150	**S1EM150PB00S**	NH4	32.00	29.50	41.00	1210	F	SCD 35
225	**S1EM225PB00S**	NJ2	48.50	38.40	59.00	1970	F	SCD 35
300	**S1EM300PB00S**	NJ2	48.50	38.40	59.00	2590	F	SCD 35
500	**S1EM500PB00S**	NJ3	51.50	43.40	66.00	4460	F	SCD 35
750	**S1EM750PB00S**	NJ6	64.00	57.40	71.00	6260	F	SCD 35

*Wall mounting kit and/or drip plate kit required.
Refer to pages 271 to 273 for details.

600 Delta Primary Volts 480Y/277 Secondary Volts 60 Hz

kVA	Catalog Number	Case Style (Pages 260 - 267)	Approx. Dimensions (Inches) Width	Depth	Height	Approx. Weight (Lbs.)	Mtg Type W - Wall F - Floor	Wiring Diagram (Pages 276 - 288)
15	**S1EM015PK00S**	NH5	19.40	20.20	21.50	250	F or W *	SCD 35
30	**S1EM030PK00S**	NH6	23.90	25.00	28.75	350	F or W *	SCD 35
45	**S1EM045PK00S**	NH3	26.00	25.00	38.00	460	F or W *	SCD 35
75	**S1EM075PK00S**	NH4	32.00	29.50	41.00	650	F	SCD 35
112.5	**S1EM112PK00S**	NH4	32.00	29.50	41.00	960	F	SCD 35
150	**S1EM150PK00S**	NH4	32.00	29.50	41.00	1210	F	SCD 35
225	**S1EM225PK00S**	NJ2	48.50	38.40	59.00	1970	F	SCD 35
300	**S1EM300PK00S**	NJ2	48.50	38.40	59.00	2590	F	SCD 35
500	**S1EM500PK00S**	NJ3	51.50	43.40	66.00	4460	F	SCD 35
750	**S1EM750PK00S**	NJ6	64.00	57.40	71.00	6260	F	SCD 35

*Wall mounting kit and/or drip plate kit required.
Refer to pages 271 to 273 for details.

For accessories see pages 271 to 274.
© Hammond Power Solutions Inc.
Data subject to change without notice.

ALUMINUM WOUND, THREE PHASE, SHIELDED, -30° PHASE SHIFT

208 Wye Primary Volts — 208Y/120 Secondary Volts — 60 Hz

kVA	Catalog Number	Case Style (Pages 260 - 267)	Approx. Dimensions (Inches) Width	Depth	Height	Approx. Weight (Lbs.)	Mtg Type W - Wall F - Floor	Wiring Diagram (Pages 276 - 288)
15	**S1EM015BB30S**	NH5	19.40	20.20	21.50	250	F or W *	SCD 35
30	**S1EM030BB30S**	NH6	23.90	25.00	28.75	350	F or W *	SCD 35
45	**S1EM045BB30S**	NH3	26.00	25.00	38.00	460	F or W *	SCD 35
75	**S1EM075BB30S**	NH4	32.00	29.50	41.00	650	F	SCD 35
112.5	**S1EM112BB30S**	NH4	32.00	29.50	41.00	960	F	SCD 35
150	**S1EM150BB30S**	NH4	32.00	29.50	41.00	1210	F	SCD 35
225	**S1EM225BB30S**	NJ2	48.50	38.40	59.00	1970	F	SCD 35
300	**S1EM300BB30S**	NJ2	48.50	38.40	59.00	2590	F	SCD 35
500	**S1EM500BB30S**	NJ3	51.50	43.40	66.00	4460	F	SCD 35
750	**S1EM750BB30S**	NJ6	64.00	57.40	71.00	6260	F	SCD 35

*Wall mounting kit and/or drip plate kit required.
Refer to pages 271 to 273 for details.

208 Wye Primary Volts — 480Y/277 Secondary Volts — 60 Hz

kVA	Catalog Number	Case Style (Pages 260 - 267)	Approx. Dimensions (Inches) Width	Depth	Height	Approx. Weight (Lbs.)	Mtg Type W - Wall F - Floor	Wiring Diagram (Pages 276 - 288)
15	**S1EM015BK30S**	NH5	19.40	20.20	21.50	250	F or W *	SCD 35
30	**S1EM030BK30S**	NH6	23.90	25.00	28.75	350	F or W *	SCD 35
45	**S1EM045BK30S**	NH3	26.00	25.00	38.00	460	F or W *	SCD 35
75	**S1EM075BK30S**	NH4	32.00	29.50	41.00	650	F	SCD 35
112.5	**S1EM112BK30S**	NH4	32.00	29.50	41.00	960	F	SCD 35
150	**S1EM150BK30S**	NH4	32.00	29.50	41.00	1210	F	SCD 35
225	**S1EM225BK30S**	NJ2	48.50	38.40	59.00	1970	F	SCD 35
300	**S1EM300BK30S**	NJ2	48.50	38.40	59.00	2590	F	SCD 35
500	**S1EM500BK30S**	NJ3	51.50	43.40	66.00	4460	F	SCD 35
750	**S1EM750BK30S**	NJ6	64.00	57.40	71.00	6260	F	SCD 35

*Wall mounting kit and/or drip plate kit required.
Refer to pages 271 to 273 for details.

480 Wye Primary Volts — 208Y/120 Secondary Volts — 60 Hz

kVA	Catalog Number	Case Style (Pages 260 - 267)	Approx. Dimensions (Inches) Width	Depth	Height	Approx. Weight (Lbs.)	Mtg Type W - Wall F - Floor	Wiring Diagram (Pages 276 - 288)
15	**S1EM015KB30S**	NH5	19.40	20.20	21.50	250	F or W *	SCD 35
30	**S1EM030KB30S**	NH6	23.90	25.00	28.75	350	F or W *	SCD 35
45	**S1EM045KB30S**	NH3	26.00	25.00	38.00	460	F or W *	SCD 35
75	**S1EM075KB30S**	NH4	32.00	29.50	41.00	650	F	SCD 35
112.5	**S1EM112KB30S**	NH4	32.00	29.50	41.00	960	F	SCD 35
150	**S1EM150KB30S**	NH4	32.00	29.50	41.00	1210	F	SCD 35
225	**S1EM225KB30S**	NJ2	48.50	38.40	59.00	1970	F	SCD 35
300	**S1EM300KB30S**	NJ2	48.50	38.40	59.00	2590	F	SCD 35
500	**S1EM500KB30S**	NJ3	51.50	43.40	66.00	4460	F	SCD 35
750	**S1EM750KB30S**	NJ6	64.00	57.40	71.00	6260	F	SCD 35

*Wall mounting kit and/or drip plate kit required.
Refer to pages 271 to 273 for details.

For accessories see pages 271 to 274.

© Hammond Power Solutions Inc.
Data subject to change without notice.

ALUMINUM WOUND, THREE PHASE, SHIELDED, -30° PHASE SHIFT

480 Wye Primary Volts 480Y/277 Secondary Volts 60 Hz

kVA	Catalog Number	Case Style (Pages 260 - 267)	Approx. Dimensions (Inches) Width	Depth	Height	Approx. Weight (Lbs.)	Mtg Type W - Wall F - Floor	Wiring Diagram (Pages 276 - 288)
15	**S1EM015KK30S**	NH5	19.40	20.20	21.50	250	F or W *	SCD 35
30	**S1EM030KK30S**	NH6	23.90	25.00	28.75	350	F or W *	SCD 35
45	**S1EM045KK30S**	NH3	26.00	25.00	38.00	460	F or W *	SCD 35
75	**S1EM075KK30S**	NH4	32.00	29.50	41.00	650	F	SCD 35
112.5	**S1EM112KK30S**	NH4	32.00	29.50	41.00	960	F	SCD 35
150	**S1EM150KK30S**	NH4	32.00	29.50	41.00	1210	F	SCD 35
225	**S1EM225KK30S**	NJ2	48.50	38.40	59.00	1970	F	SCD 35
300	**S1EM300KK30S**	NJ2	48.50	38.40	59.00	2590	F	SCD 35
500	**S1EM500KK30S**	NJ3	51.50	43.40	66.00	4460	F	SCD 35
750	**S1EM750KK30S**	NJ6	64.00	57.40	71.00	6260	F	SCD 35

*Wall mounting kit and/or drip plate kit required.
Refer to pages 271 to 273 for details.

600 Wye Primary Volts 208Y/120 Secondary Volts 60 Hz

kVA	Catalog Number	Case Style (Pages 260 - 267)	Approx. Dimensions (Inches) Width	Depth	Height	Approx. Weight (Lbs.)	Mtg Type W - Wall F - Floor	Wiring Diagram (Pages 276 - 288)
15	**S1EM015PB30S**	NH5	19.40	20.20	21.50	250	F or W *	SCD 35
30	**S1EM030PB30S**	NH6	23.90	25.00	28.75	350	F or W *	SCD 35
45	**S1EM045PB30S**	NH3	26.00	25.00	38.00	460	F or W *	SCD 35
75	**S1EM075PB30S**	NH4	32.00	29.50	41.00	650	F	SCD 35
112.5	**S1EM112PB30S**	NH4	32.00	29.50	41.00	960	F	SCD 35
150	**S1EM150PB30S**	NH4	32.00	29.50	41.00	1210	F	SCD 35
225	**S1EM225PB30S**	NJ2	48.50	38.40	59.00	1970	F	SCD 35
300	**S1EM300PB30S**	NJ2	48.50	38.40	59.00	2590	F	SCD 35
500	**S1EM500PB30S**	NJ3	51.50	43.40	66.00	4460	F	SCD 35
750	**S1EM750PB30S**	NJ6	64.00	57.40	71.00	6260	F	SCD 35

*Wall mounting kit and/or drip plate kit required.
Refer to pages 271 to 273 for details.

600 Wye Primary Volts 480Y/277 Secondary Volts 60 Hz

kVA	Catalog Number	Case Style (Pages 260 - 267)	Approx. Dimensions (Inches) Width	Depth	Height	Approx. Weight (Lbs.)	Mtg Type W - Wall F - Floor	Wiring Diagram (Pages 276 - 288)
15	**S1EM015PK30S**	NH5	19.40	20.20	21.50	250	F or W *	SCD 35
30	**S1EM030PK30S**	NH6	23.90	25.00	28.75	350	F or W *	SCD 35
45	**S1EM045PK30S**	NH3	26.00	25.00	38.00	460	F or W *	SCD 35
75	**S1EM075PK30S**	NH4	32.00	29.50	41.00	650	F	SCD 35
112.5	**S1EM112PK30S**	NH4	32.00	29.50	41.00	960	F	SCD 35
150	**S1EM150PK30S**	NH4	32.00	29.50	41.00	1210	F	SCD 35
225	**S1EM225PK30S**	NJ2	48.50	38.40	59.00	1970	F	SCD 35
300	**S1EM300PK30S**	NJ2	48.50	38.40	59.00	2590	F	SCD 35
500	**S1EM500PK30S**	NJ3	51.50	43.40	66.00	4460	F	SCD 35
750	**S1EM750PK30S**	NJ6	64.00	57.40	71.00	6260	F	SCD 35

*Wall mounting kit and/or drip plate kit required.
Refer to pages 271 to 273 for details.

For accessories see pages 271 to 274.
© Hammond Power Solutions Inc.
Data subject to change without notice.

COPPER WOUND, THREE PHASE, SHIELDED, 0° PHASE SHIFT

208 Delta Primary Volts 208Y/120 Secondary Volts 60 Hz

kVA	Catalog Number	Case Style (Pages 260 - 267)	Approx. Dimensions (Inches) Width	Depth	Height	Approx. Weight (Lbs.)	Mtg Type W - Wall F - Floor	Wiring Diagram (Pages 276 - 288)
15	**S1EM015BB00**	NH5	19.40	20.20	21.50	250	F or W *	SCD 35
30	**S1EM030BB00**	NH6	23.90	25.00	28.75	390	F or W *	SCD 35
45	**S1EM045BB00**	NH6	23.90	25.00	28.75	460	F or W *	SCD 35
75	**S1EM075BB00**	NH3	26.00	25.00	38.00	660	F or W *	SCD 35
112.5	**S1EM112BB00**	NH4	32.00	29.50	41.00	1000	F	SCD 35
150	**S1EM150BB00**	NH4	32.00	29.50	41.00	1250	F	SCD 35
225	**S1EM225BB00**	NJ1	39.50	34.00	51.50	1960	F	SCD 35
300	**S1EM300BB00**	NJ2	48.50	38.40	59.00	2470	F	SCD 35
500	**S1EM500BB00**	NJ3	51.50	43.40	66.00	3930	F	SCD 35
750	**S1EM750BB00**	NJ6	64.00	57.40	71.00	5760	F	SCD 35

*Wall mounting kit and/or drip plate kit required.
Refer to pages 271 to 273 for details.

208 Delta Primary Volts 480Y/277 Secondary Volts 60 Hz

kVA	Catalog Number	Case Style (Pages 260 - 267)	Approx. Dimensions (Inches) Width	Depth	Height	Approx. Weight (Lbs.)	Mtg Type W - Wall F - Floor	Wiring Diagram (Pages 276 - 288)
15	**S1EM015BK00**	NH5	19.40	20.20	21.50	250	F or W *	SCD 35
30	**S1EM030BK00**	NH6	23.90	25.00	28.75	390	F or W *	SCD 35
45	**S1EM045BK00**	NH6	23.90	25.00	28.75	460	F or W *	SCD 35
75	**S1EM075BK00**	NH3	26.00	25.00	38.00	660	F or W *	SCD 35
112.5	**S1EM112BK00**	NH4	32.00	29.50	41.00	1000	F	SCD 35
150	**S1EM150BK00**	NH4	32.00	29.50	41.00	1250	F	SCD 35
225	**S1EM225BK00**	NJ1	39.50	34.00	51.50	1960	F	SCD 35
300	**S1EM300BK00**	NJ2	48.50	38.40	59.00	2470	F	SCD 35
500	**S1EM500BK00**	NJ3	51.50	43.40	66.00	3930	F	SCD 35
750	**S1EM750BK00**	NJ6	64.00	57.40	71.00	5760	F	SCD 35

*Wall mounting kit and/or drip plate kit required.
Refer to pages 271 to 273 for details.

480 Delta Primary Volts 208Y/120 Secondary Volts 60 Hz

kVA	Catalog Number	Case Style (Pages 260 - 267)	Approx. Dimensions (Inches) Width	Depth	Height	Approx. Weight (Lbs.)	Mtg Type W - Wall F - Floor	Wiring Diagram (Pages 276 - 288)
15	**S1EM015KB00**	NH5	19.40	20.20	21.50	250	F or W *	SCD 35
30	**S1EM030KB00**	NH6	23.90	25.00	28.75	390	F or W *	SCD 35
45	**S1EM045KB00**	NH6	23.90	25.00	28.75	460	F or W *	SCD 35
75	**S1EM075KB00**	NH3	26.00	25.00	38.00	660	F or W *	SCD 35
112.5	**S1EM112KB00**	NH4	32.00	29.50	41.00	1000	F	SCD 35
150	**S1EM150KB00**	NH4	32.00	29.50	41.00	1250	F	SCD 35
225	**S1EM225KB00**	NJ1	39.50	34.00	51.50	1960	F	SCD 35
300	**S1EM300KB00**	NJ2	48.50	38.40	59.00	2470	F	SCD 35
500	**S1EM500KB00**	NJ3	51.50	43.40	66.00	3930	F	SCD 35
750	**S1EM750KB00**	NJ6	64.00	57.40	71.00	5760	F	SCD 35

*Wall mounting kit and/or drip plate kit required.
Refer to pages 271 to 273 for details.

For accessories see pages 271 to 274.

© Hammond Power Solutions Inc.
Data subject to change without notice.

COPPER WOUND, THREE PHASE, SHIELDED, 0° PHASE SHIFT

480 Delta Primary Volts 480Y/277 Secondary Volts 60 Hz

kVA	Catalog Number	Case Style (Pages 260 - 267)	Approx. Dimensions (Inches) Width	Depth	Height	Approx. Weight (Lbs.)	Mtg Type W - Wall F - Floor	Wiring Diagram (Pages 276 - 288)
15	**S1EM015KK00**	NH5	19.40	20.20	21.50	250	F or W *	SCD 35
30	**S1EM030KK00**	NH6	23.90	25.00	28.75	390	F or W *	SCD 35
45	**S1EM045KK00**	NH6	23.90	25.00	28.75	460	F or W *	SCD 35
75	**S1EM075KK00**	NH3	26.00	25.00	38.00	660	F or W *	SCD 35
112.5	**S1EM112KK00**	NH4	32.00	29.50	41.00	1000	F	SCD 35
150	**S1EM150KK00**	NH4	32.00	29.50	41.00	1250	F	SCD 35
225	**S1EM225KK00**	NJ1	39.50	34.00	51.50	1960	F	SCD 35
300	**S1EM300KK00**	NJ2	48.50	38.40	59.00	2470	F	SCD 35
500	**S1EM500KK00**	NJ3	51.50	43.40	66.00	3930	F	SCD 35
750	**S1EM750KK00**	NJ6	64.00	57.40	71.00	5760	F	SCD 35

*Wall mounting kit and/or drip plate kit required. Refer to pages 271 to 273 for details.

600 Delta Primary Volts 208Y/120 Secondary Volts 60 Hz

kVA	Catalog Number	Case Style (Pages 260 - 267)	Approx. Dimensions (Inches) Width	Depth	Height	Approx. Weight (Lbs.)	Mtg Type W - Wall F - Floor	Wiring Diagram (Pages 276 - 288)
15	**S1EM015PB00**	NH5	19.40	20.20	21.50	250	F or W *	SCD 35
30	**S1EM030PB00**	NH6	23.90	25.00	28.75	390	F or W *	SCD 35
45	**S1EM045PB00**	NH6	23.90	25.00	28.75	460	F or W *	SCD 35
75	**S1EM075PB00**	NH3	26.00	25.00	38.00	660	F or W *	SCD 35
112.5	**S1EM112PB00**	NH4	32.00	29.50	41.00	1000	F	SCD 35
150	**S1EM150PB00**	NH4	32.00	29.50	41.00	1250	F	SCD 35
225	**S1EM225PB00**	NJ1	39.50	34.00	51.50	1960	F	SCD 35
300	**S1EM300PB00**	NJ2	48.50	38.40	59.00	2470	F	SCD 35
500	**S1EM500PB00**	NJ3	51.50	43.40	66.00	3930	F	SCD 35
750	**S1EM750PB00**	NJ6	64.00	57.40	71.00	5760	F	SCD 35

*Wall mounting kit and/or drip plate kit required. Refer to pages 271 to 273 for details.

600 Delta Primary Volts 480Y/277 Secondary Volts 60 Hz

kVA	Catalog Number	Case Style (Pages 260 - 267)	Approx. Dimensions (Inches) Width	Depth	Height	Approx. Weight (Lbs.)	Mtg Type W - Wall F - Floor	Wiring Diagram (Pages 276 - 288)
15	**S1EM015PK00**	NH5	19.40	20.20	21.50	250	F or W *	SCD 35
30	**S1EM030PK00**	NH6	23.90	25.00	28.75	390	F or W *	SCD 35
45	**S1EM045PK00**	NH6	23.90	25.00	28.75	460	F or W *	SCD 35
75	**S1EM075PK00**	NH3	26.00	25.00	38.00	660	F or W *	SCD 35
112.5	**S1EM112PK00**	NH4	32.00	29.50	41.00	1000	F	SCD 35
150	**S1EM150PK00**	NH4	32.00	29.50	41.00	1250	F	SCD 35
225	**S1EM225PK00**	NJ1	39.50	34.00	51.50	1960	F	SCD 35
300	**S1EM300PK00**	NJ2	48.50	38.40	59.00	2470	F	SCD 35
500	**S1EM500PK00**	NJ3	51.50	43.40	66.00	3930	F	SCD 35
750	**S1EM750PK00**	NJ6	64.00	57.40	71.00	5760	F	SCD 35

*Wall mounting kit and/or drip plate kit required. Refer to pages 271 to 273 for details.

For accessories see pages 271 to 274.

© Hammond Power Solutions Inc.
Data subject to change without notice.

COPPER WOUND, THREE PHASE, SHIELDED, -30° PHASE SHIFT

208 Wye Primary Volts — 208Y/120 Secondary Volts — 60 Hz

kVA	Catalog Number	Case Style (Pages 260 - 267)	Approx. Dimensions (Inches) Width	Depth	Height	Approx. Weight (Lbs.)	Mtg Type W - Wall F - Floor	Wiring Diagram (Pages 276 - 288)
15	**S1EM015BB30**	NH5	19.40	20.20	21.50	250	F or W *	SCD 35
30	**S1EM030BB30**	NH6	23.90	25.00	28.75	390	F or W *	SCD 35
45	**S1EM045BB30**	NH6	23.90	25.00	28.75	460	F or W *	SCD 35
75	**S1EM075BB30**	NH3	26.00	25.00	38.00	660	F or W *	SCD 35
112.5	**S1EM112BB30**	NH4	32.00	29.50	41.00	1000	F	SCD 35
150	**S1EM150BB30**	NH4	32.00	29.50	41.00	1250	F	SCD 35
225	**S1EM225BB30**	NJ1	39.50	34.00	51.50	1960	F	SCD 35
300	**S1EM300BB30**	NJ2	48.50	38.40	59.00	2470	F	SCD 35
500	**S1EM500BB30**	NJ3	51.50	43.40	66.00	3930	F	SCD 35
750	**S1EM750BB30**	NJ6	64.00	57.40	71.00	5760	F	SCD 35

*Wall mounting kit and/or drip plate kit required.
Refer to pages 271 to 273 for details.

208 Wye Primary Volts — 480Y/277 Secondary Volts — 60 Hz

kVA	Catalog Number	Case Style (Pages 260 - 267)	Approx. Dimensions (Inches) Width	Depth	Height	Approx. Weight (Lbs.)	Mtg Type W - Wall F - Floor	Wiring Diagram (Pages 276 - 288)
15	**S1EM015BK30**	NH5	19.40	20.20	21.50	250	F or W *	SCD 35
30	**S1EM030BK30**	NH6	23.90	25.00	28.75	390	F or W *	SCD 35
45	**S1EM045BK30**	NH6	23.90	25.00	28.75	460	F or W *	SCD 35
75	**S1EM075BK30**	NH3	26.00	25.00	38.00	660	F or W *	SCD 35
112.5	**S1EM112BK30**	NH4	32.00	29.50	41.00	1000	F	SCD 35
150	**S1EM150BK30**	NH4	32.00	29.50	41.00	1250	F	SCD 35
225	**S1EM225BK30**	NJ1	39.50	34.00	51.50	1960	F	SCD 35
300	**S1EM300BK30**	NJ2	48.50	38.40	59.00	2470	F	SCD 35
500	**S1EM500BK30**	NJ3	51.50	43.40	66.00	3930	F	SCD 35
750	**S1EM750BK30**	NJ6	64.00	57.40	71.00	5760	F	SCD 35

*Wall mounting kit and/or drip plate kit required.
Refer to pages 271 to 273 for details.

480 Wye Primary Volts — 208Y/120 Secondary Volts — 60 Hz

kVA	Catalog Number	Case Style (Pages 260 - 267)	Approx. Dimensions (Inches) Width	Depth	Height	Approx. Weight (Lbs.)	Mtg Type W - Wall F - Floor	Wiring Diagram (Pages 276 - 288)
15	**S1EM015KB30**	NH5	19.40	20.20	21.50	250	F or W *	SCD 35
30	**S1EM030KB30**	NH6	23.90	25.00	28.75	390	F or W *	SCD 35
45	**S1EM045KB30**	NH6	23.90	25.00	28.75	460	F or W *	SCD 35
75	**S1EM075KB30**	NH3	26.00	25.00	38.00	660	F or W *	SCD 35
112.5	**S1EM112KB30**	NH4	32.00	29.50	41.00	1000	F	SCD 35
150	**S1EM150KB30**	NH4	32.00	29.50	41.00	1250	F	SCD 35
225	**S1EM225KB30**	NJ1	39.50	34.00	51.50	1960	F	SCD 35
300	**S1EM300KB30**	NJ2	48.50	38.40	59.00	2470	F	SCD 35
500	**S1EM500KB30**	NJ3	51.50	43.40	66.00	3930	F	SCD 35
750	**S1EM750KB30**	NJ6	64.00	57.40	71.00	5760	F	SCD 35

*Wall mounting kit and/or drip plate kit required.
Refer to pages 271 to 273 for details.

For accessories see pages 271 to 274.

© Hammond Power Solutions Inc.
Data subject to change without notice.

COPPER WOUND, THREE PHASE, SHIELDED, -30° PHASE SHIFT

480 Wye Primary Volts 480Y/277 Secondary Volts 60 Hz

kVA	Catalog Number	Case Style (Pages 260 - 267)	Approx. Dimensions (Inches) Width	Depth	Height	Approx. Weight (Lbs.)	Mtg Type W - Wall F - Floor	Wiring Diagram (Pages 276 - 288)
15	**S1EM015KK30**	NH5	19.40	20.20	21.50	250	F or W *	SCD 35
30	**S1EM030KK30**	NH6	23.90	25.00	28.75	390	F or W *	SCD 35
45	**S1EM045KK30**	NH6	23.90	25.00	28.75	460	F or W *	SCD 35
75	**S1EM075KK30**	NH3	26.00	25.00	38.00	660	F or W *	SCD 35
112.5	**S1EM112KK30**	NH4	32.00	29.50	41.00	1000	F	SCD 35
150	**S1EM150KK30**	NH4	32.00	29.50	41.00	1250	F	SCD 35
225	**S1EM225KK30**	NJ1	39.50	34.00	51.50	1960	F	SCD 35
300	**S1EM300KK30**	NJ2	48.50	38.40	59.00	2470	F	SCD 35
500	**S1EM500KK30**	NJ3	51.50	43.40	66.00	3930	F	SCD 35
750	**S1EM750KK30**	NJ6	64.00	57.40	71.00	5760	F	SCD 35

*Wall mounting kit and/or drip plate kit required.
Refer to pages 271 to 273 for details.

600 Wye Primary Volts 208Y/120 Secondary Volts 60 Hz

kVA	Catalog Number	Case Style (Pages 260 - 267)	Approx. Dimensions (Inches) Width	Depth	Height	Approx. Weight (Lbs.)	Mtg Type W - Wall F - Floor	Wiring Diagram (Pages 276 - 288)
15	**S1EM015PB30**	NH5	19.40	20.20	21.50	250	F or W *	SCD 35
30	**S1EM030PB30**	NH6	23.90	25.00	28.75	390	F or W *	SCD 35
45	**S1EM045PB30**	NH6	23.90	25.00	28.75	460	F or W *	SCD 35
75	**S1EM075PB30**	NH3	26.00	25.00	38.00	660	F or W *	SCD 35
112.5	**S1EM112PB30**	NH4	32.00	29.50	41.00	1000	F	SCD 35
150	**S1EM150PB30**	NH4	32.00	29.50	41.00	1250	F	SCD 35
225	**S1EM225PB30**	NJ1	39.50	34.00	51.50	1960	F	SCD 35
300	**S1EM300PB30**	NJ2	48.50	38.40	59.00	2470	F	SCD 35
500	**S1EM500PB30**	NJ3	51.50	43.40	66.00	3930	F	SCD 35
750	**S1EM750PB30**	NJ6	64.00	57.40	71.00	5760	F	SCD 35

*Wall mounting kit and/or drip plate kit required.
Refer to pages 271 to 273 for details.

600 Wye Primary Volts 480Y/277 Secondary Volts 60 Hz

kVA	Catalog Number	Case Style (Pages 260 - 267)	Approx. Dimensions (Inches) Width	Depth	Height	Approx. Weight (Lbs.)	Mtg Type W - Wall F - Floor	Wiring Diagram (Pages 276 - 288)
15	**S1EM015PK30**	NH5	19.40	20.20	21.50	250	F or W *	SCD 35
30	**S1EM030PK30**	NH6	23.90	25.00	28.75	390	F or W *	SCD 35
45	**S1EM045PK30**	NH6	23.90	25.00	28.75	460	F or W *	SCD 35
75	**S1EM075PK30**	NH3	26.00	25.00	38.00	660	F or W *	SCD 35
112.5	**S1EM112PK30**	NH4	32.00	29.50	41.00	1000	F	SCD 35
150	**S1EM150PK30**	NH4	32.00	29.50	41.00	1250	F	SCD 35
225	**S1EM225PK30**	NJ1	39.50	34.00	51.50	1960	F	SCD 35
300	**S1EM300PK30**	NJ2	48.50	38.40	59.00	2470	F	SCD 35
500	**S1EM500PK30**	NJ3	51.50	43.40	66.00	3930	F	SCD 35
750	**S1EM750PK30**	NJ6	64.00	57.40	71.00	5760	F	SCD 35

*Wall mounting kit and/or drip plate kit required.
Refer to pages 271 to 273 for details.

For accessories see pages 271 to 274.

© Hammond Power Solutions Inc.
Data subject to change without notice.

SECTION 8

ENCAPSULATED DISTRIBUTION TRANSFORMERS

Commercial & Industrial
Single Phase and Three Phase

HPS FORTRESS™ Commercial Encapsulated Transformers

Applications & Features 224
Single Phase Standard Specification 226
Single Phase Selection Tables 227
Three Phase Standard Specifications 230
Three Phase Selection Tables 231

HPS TITAN® Industrial Encapsulated Transformers

Applications 233
Features & Benefits 234
Single Phase Standard Specifications 235
Single Phase Selection Tables 236
Three Phase Standard Specifications 238
Three Phase Selection Tables 239

Enclosure Dimensional Drawings 260
Accessories - Enclosure Mounting Kits, Anti-Vibration Pads & Isolators 271
Wiring Schematic Drawings 276

HPS FORTRESS Features

HPS Fortress is an innovative design that provides the ideal solution for commercial applications where **quality, ease of installation, and low cost** are key.

All units are encapsulated with electrical grade silica sand and resin compounds, which completely enclose the core and coil to seal out moisture, airborne contaminants and eliminates corrosion and deterioration.

STANDARD FEATURES

Features	Single Phase	Three Phase
Voltage Groups	9 standard voltage groups	8 standard voltage groups
Ratings	From 50VA to 37.5kVA	From 2kVA to 75kVA
Shield	Standard shield from 750VA and up	Standard shield on all units
Frequency	60 Hz (50Hz standard on four voltage groups)	60Hz standard on all voltage groups
Connection	Standard via copper leads	
Enclosure	NEMA 3R	NEMA 3R (NEMA 4/12 with optional gasket kit installed)
Quality Design	All units are encapsulated with electrical grade silica sand and resin compounds, which completely enclose the core and coil to seal out moisture, airborne contaminants and eliminates corrosion and deterioration.	
Conduit Knockouts	For rear and side entry into an easily accessible and roomy wiring compartment.	
Installation	Wall mounting up to 25kVA, optional wall mounting bracket available on 37.5kVA. Wall mounting template supplied.	Wall mounting up to 9kVA, optional wall mounting bracket available on 15kVA, 30kVA and 45kVA. Wall mounting template supplied.
Warranty	All HPS standard catalog encapsulated transformers come with a 10 year limited* warranty	

*(Please refer to the HPS Warranty on page 28 for full details.)

Inexpensive & easy

APPLICATIONS

- Shopping Centers
- Schools
- Sports Complexes
- Office Buildings
- Lighting

FOR ACCESSORIES SEE PAGES 271-274.

© Hammond Power Solutions Inc.
Data subject to change without notice.

HPS Fortress Features continued

Totally enclosed to seal out moisture and airborne contaminants.

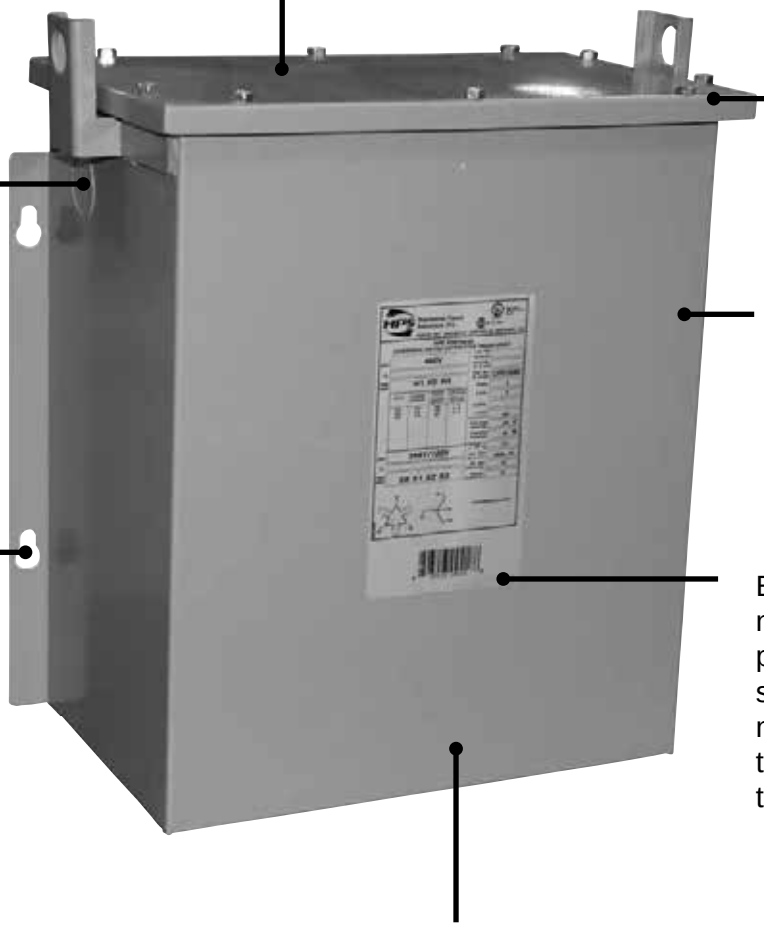

NEMA 4/12 enclosure rating available when optional gasket kit is installed.

Rear and side entry conduit knockouts into an easily accessible and roomy wiring compartment.

NEMA 3R enclosure meets or exceeds listing criteria including NEMA, and ANSI standards for indoor and outdoor applications.

Installation made quick and easy with keyhole mounting slots and supplied wall mounting template.

Easily accessible nameplate. All three phase units come standard with two nameplates. One on the front and one on the inside top cover.

All units are encapsulated with electrical grade silica sand and resin compounds.

Note: Picture displayed above is a standard three phase HPS Fortress units.

For accessories see pages 271-274

© Hammond Power Solutions Inc.
Data subject to change without notice.

HPS FORTRESS™

COMMERCIAL ENCAPSULATED DISTRIBUTION TRANSFORMERS

SINGLE PHASE STANDARD SPECIFICATIONS

0.50 TO 1 KVA

1.5 TO 37.5 KVA

	.05 kVA to 1 kVA	1.5 kVA to 37.5 kVA
UL Listed	File: E50394	File: E50394
CSA Certified	File: LR3902	File: LR3902
Frequency	60 Hz (50/60 Hz)	60 Hz (50/60 Hz)
Insulation System	130°C standard on all units	180°C standard on all units.
Electrostatic Shield	Standard on 0.75 kVA and up.	Standard on all units.
Encapsulation	All units are encapsulated with electrical grade silica sand and resin compounds.	All units are encapsulated with electrical grade silica sand and resin compounds.
Enclosure Type	NEMA Type 3R	NEMA Type 3R
Enclosure Finish	ANSI 61 Grey, UL50	ANSI 61 Grey, UL50
Termination	Front accessible separate high and low voltage lead wires or copper tabs.	Front accessible separate high and low voltage lead wires or copper tabs.
Conduit Knock-Outs	Standard side and rear knock-outs on all units.	Standard side and rear knock-outs on all units.
Impedance	Typically 5 to 10%.	Typically 1 to 5%.
Mounting	Standard Wall Mounting.	Standard Wall Mounting up to 25kVA. Optional wall mounting kit for 37.5kVA units. Lifting provisions standard on units 5 kVA and up.
Sound Level	Meets NEMA ST-20 standards.	Meets NEMA ST-20 standards

Other voltages and kVA ratings not listed in this section are available upon request. Please contact customer service for details, price and availability.

FOR ACCESSORIES SEE PAGES 271-274.

© Hammond Power Solutions Inc.

Data subject to change without notice.

SINGLE PHASE, NEMA 3R STYLE ENCLOSURE

120 X 240 Primary Volts 120/240 Secondary Volts 60 Hz

kVA	Catalog Number	Case Style (Pages 260 - 267)	Approx. Dimensions (Inches) Width	Depth	Height	Approx. Weight (Lbs.)	Mtg Type W - Wall F - Floor	Wiring Diagram (Pages 276 - 288)
0.05	**C1FC05EE**	NQ0	3.75	5.25	7.25	7	W	SCD1
0.10	**C1FC10EE**	NQ0	3.75	5.25	7.25	7	W	SCD1
0.15	**C1FC15EE**	NQ0	3.75	5.25	7.25	8	W	SCD1
0.25	**C1FC25EE**	NQ0	3.75	5.25	7.25	9	W	SCD1
0.35	**C1FC35EE**	NQ1	4.50	5.75	7.25	15	W	SCD1
0.50	**C1FC50EE**	NQ1	4.50	5.75	7.25	16	W	SCD1
0.75	**C1FC75EES**	NQ2	5.00	4.75	9.25	23	W	SCD1
1	**C1F1C0EES**	NQ3	5.88	5.50	10.50	24	W	SCD1
1.5	**C1F1C5EES**	NQ3	5.88	5.50	10.50	33	W	SCD1
2	**C1F002EES**	NQ4	7.00	6.50	11.75	42	W	SCD1
3	**C1F003EES**	NQ4	7.00	6.50	11.75	55	W	SCD1
5	**C1F005EES**	NQ5	10.00	7.75	17.25	96	W	SCD1
7.5	**C1F007EES**	NQ6A	12.25	9.25	17.63	148	W	SCD2
10	**C1F010EES**	NQ6	12.25	9.25	20.88	178	W	SCD2

208 X 416 Primary Volts 120/240 Secondary Volts 60 Hz

kVA	Catalog Number	Case Style (Pages 260 - 267)	Approx. Dimensions (Inches) Width	Depth	Height	Approx. Weight (Lbs.)	Mtg Type W - Wall F - Floor	Wiring Diagram (Pages 276 - 288)
0.05	**C1FC05GE**	NQ0	3.75	5.25	7.25	7	W	SCD1
0.10	**C1FC10GE**	NQ0	3.75	5.25	7.25	7	W	SCD1
0.15	**C1FC15GE**	NQ0	3.75	5.25	7.25	8	W	SCD1
0.25	**C1FC25GE**	NQ0	3.75	5.25	7.25	9	W	SCD1
0.35	**C1FC35GE**	NQ1	4.50	5.75	7.25	15	W	SCD1
0.50	**C1FC50GE**	NQ1	4.50	5.75	7.25	16	W	SCD1
0.75	**C1FC75GES**	NQ2	5.00	4.75	9.25	23	W	SCD1
1	**C1F1C0GES**	NQ3	5.88	5.50	10.50	24	W	SCD1
1.5	**C1F1C5GES**	NQ3	5.88	5.50	10.50	33	W	SCD1
2	**C1F002GES**	NQ4	7.00	6.50	11.75	42	W	SCD1
3	**C1F003GES**	NQ4	7.00	6.50	11.75	55	W	SCD1
5	**C1F005GES**	NQ5	10.00	7.75	17.25	96	W	SCD1
7.5	**C1F007GES**	NQ6A	12.25	9.25	17.63	148	W	SCD2
10	**C1F010GES**	NQ6	12.25	9.25	20.88	178	W	SCD2

120/208/240/277 Primary Volts 120/240 Secondary Volts 60 Hz

kVA	Catalog Number	Case Style (Pages 260 - 267)	Approx. Dimensions (Inches) Width	Depth	Height	Approx. Weight (Lbs.)	Mtg Type W - Wall F - Floor	Wiring Diagram (Pages 276 - 288)
0.05	**C1FC05WE**	NQ0	3.75	5.25	7.25	7	W	SCD41
0.10	**C1FC10WE**	NQ0	3.75	5.25	7.25	7	W	SCD41
0.15	**C1FC15WE**	NQ0	3.75	5.25	7.25	8	W	SCD41
0.25	**C1FC25WE**	NQ1	4.50	5.75	7.25	10	W	SCD41
0.35	**C1FC35WE**	NQ2	5.00	4.75	9.25	17	W	SCD41
0.50	**C1FC50WE**	NQ2	5.00	4.75	9.25	25	W	SCD41
0.75	**C1FC75WES**	NQ2	5.00	4.75	9.25	23	W	SCD41
1	**C1F1C0WES**	NQ3	5.88	5.50	10.50	24	W	SCD41
1.5	**C1F1C5WES**	NQ3	5.88	5.50	10.50	37	W	SCD41
2	**C1F002WES**	NQ4	7.00	6.50	11.75	52	W	SCD41
3	**C1F003WES**	NQ5	10.00	7.75	17.25	65	W	SCD2
5	**C1F005WES**	NQ5	10.00	7.75	17.25	108	W	SCD2
7.5	**C1F007WES**	NQ6	12.25	9.25	20.88	171	W	SCD2
10	**C1F010WES**	NQ6	12.25	9.25	20.88	183	W	SCD2

For accessories see pages 271-274

© Hammond Power Solutions Inc.
Data subject to change without notice.

SINGLE PHASE, NEMA 3R STYLE ENCLOSURE

240 X 480 Primary Volts 120/240 Secondary Volts 60 Hz

kVA	Catalog Number	Case Style (Pages 260 - 267)	Approx. Dimensions (Inches) Width	Depth	Height	Approx. Weight (Lbs.)	Mtg Type W - Wall F - Floor	Wiring Diagram (Pages 276 - 288)
0.05	**C1FC05LE**	NQ0	3.75	5.25	7.25	7	W	SCD1
0.10	**C1FC10LE**	NQ0	3.75	5.25	7.25	7	W	SCD1
0.15	**C1FC15LE**	NQ0	3.75	5.25	7.25	8	W	SCD1
0.25	**C1FC25LE**	NQ1	4.50	5.75	7.25	9	W	SCD1
0.35	**C1FC35LE**	NQ1	4.50	5.75	7.25	15	W	SCD1
0.50	**C1FC50LE**	NQ1	4.50	5.75	7.25	16	W	SCD1
0.75	**C1FC75LES**	NQ2	5.00	4.75	9.25	23	W	SCD1
1	**C1F1C0LES**	NQ3	5.88	5.50	10.50	24	W	SCD1
1.5	**C1F1C5LES**	NQ3	5.88	5.50	10.50	33	W	SCD1
2	**C1F002LES**	NQ4	7.00	6.50	11.75	42	W	SCD1
3	**C1F003LES**	NQ4	7.00	6.50	11.75	55	W	SCD1
5	**C1F005LES**	NQ5	10.00	7.75	17.25	115	W	SCD1
7.5	**C1F007LES**	NQ6A	12.25	9.25	17.63	148	W	SCD2
10	**C1F010LES**	NQ6	12.25	9.25	20.88	179	W	SCD2
15	**C1F015LES**	NQ7	14.50	10.75	21.38	265	W	SCD2
25	**C1F025LES**	NQ8	14.50	10.75	27.38	385	W	SCD2
37.5	**C1F037LES**	NQS10	21.88	18.50	31.00	598	F or W*	SCD2

*OPTIONAL WALL MOUNTING KIT REQUIRED. REFER TO PAGE 273 FOR DETAILS.

277 Primary Volts 120/240 Secondary Volts 50/60 Hz

kVA	Catalog Number	Case Style (Pages 260 - 267)	Approx. Dimensions (Inches) Width	Depth	Height	Approx. Weight (Lbs.)	Mtg Type W - Wall F - Floor	Wiring Diagram (Pages 276 - 288)
0.05	**C1FC05CE**	NQ0	3.75	5.25	7.25	7	W	SCD4
0.10	**C1FC10CE**	NQ0	3.75	5.25	7.25	7	W	SCD4
0.15	**C1FC15CE**	NQ0	3.75	5.25	7.25	8	W	SCD4
0.25	**C1FC25CE**	NQ0	3.75	5.25	7.25	9	W	SCD4
0.35	**C1FC35CE**	NQ2	5.00	4.75	8.25	15	W	SCD4
0.50	**C1FC50CE**	NQ2	5.00	4.75	8.25	15	W	SCD4
0.75	**C1FC75CES**	NQ2	5.00	4.75	8.25	23	W	SCD4
1	**C1F1C0CES**	NQ3	5.88	5.50	10.50	24	W	SCD4
1.5	**C1F1C5CES**	NQ3	5.88	5.50	10.50	33	W	SCD4
2	**C1F002CES**	NQ4	7.00	6.50	11.75	42	W	SCD4
3	**C1F003CES**	NQ4	7.00	6.50	11.75	55	W	SCD4
5	**C1F005CES**	NQ5	10.00	7.75	17.25	115	W	SCD4
7.5	**C1F007CES**	NQ6A	12.25	9.25	17.63	148	W	SCD2
10	**C1F010CES**	NQ6	12.25	9.25	20.88	178	W	SCD2

277/480 Primary Volts 208/277 Secondary Volts 50/60 Hz

kVA	Catalog Number	Case Style (Pages 260 - 267)	Approx. Dimensions (Inches) Width	Depth	Height	Approx. Weight (Lbs.)	Mtg Type W - Wall F - Floor	Wiring Diagram (Pages 276 - 288)
0.05	**C1FC05HR**	NQ0	3.75	5.25	7.25	7	W	SCD42
0.10	**C1FC10HR**	NQ0	3.75	5.25	7.25	8	W	SCD42
0.15	**C1FC15HR**	NQ0	3.75	5.25	7.25	11	W	SCD42
0.25	**C1FC25HR**	NQ1	4.50	5.75	7.25	12	W	SCD42
0.35	**C1FC35HR**	NQ2	5.00	4.75	9.25	15	W	SCD42
0.50	**C1FC50HR**	NQ2	5.00	4.75	9.25	18	W	SCD42
0.75	**C1FC75HRS**	NQ3	5.88	5.50	10.50	25	W	SCD42
1	**C1F1C0HRS**	NQ3	5.88	5.50	10.50	31	W	SCD42
1.5	**C1F1C5HRS**	NQ4	7.00	6.50	11.75	39	W	SCD42
2	**C1F002HRS**	NQ4	7.00	6.50	11.75	54	W	SCD42
3	**C1F003HRS**	NQ5	10.00	7.75	17.25	80	W	SCD43
5	**C1F005HRS**	NQ5	10.00	7.75	17.25	156	W	SCD43
7.5	**C1F007HRS**	NQ6	12.25	9.25	20.88	188	W	SCD43
10	**C1F010HRS**	NQ6	12.25	9.25	20.88	179	W	SCD43

FOR ACCESSORIES SEE PAGES 271-274.

© Hammond Power Solutions Inc.
Data subject to change without notice.

SINGLE PHASE, NEMA 3R STYLE ENCLOSURE

347/380 Primary Volts 120/240 Secondary Volts 50/60 Hz

kVA	Catalog Number	Case Style (Pages 260 - 267)	Approx. Dimensions (Inches) Width	Depth	Height	Approx. Weight (Lbs.)	Mtg Type W - Wall F - Floor	Wiring Diagram (Pages 276 - 288)
0.05	**C1FC05JE**	NQ0	3.75	5.25	7.25	7	W	SCD33
0.10	**C1FC10JE**	NQ0	3.75	5.25	7.25	7	W	SCD33
0.15	**C1FC15JE**	NQ0	3.75	5.25	7.25	8	W	SCD33
0.25	**C1FC25JE**	NQ0	3.75	5.25	7.25	9	W	SCD33
0.35	**C1FC35JE**	NQ1	4.50	5.75	7.25	14	W	SCD33
0.50	**C1FC50JE**	NQ1	4.50	5.75	7.25	14	W	SCD33
0.75	**C1FC75JES**	NQ2	5.00	4.75	9.25	23	W	SCD33
1	**C1F1C0JES**	NQ3	5.88	5.50	10.50	32	W	SCD33
1.5	**C1F1C5JES**	NQ3	5.88	5.50	10.50	35	W	SCD33
2	**C1F002JES**	NQ4	7.00	6.50	11.75	51	W	SCD33
3	**C1F003JES**	NQ5	10.00	7.75	17.25	98	W	SCD33
5	**C1F005JES**	NQ5	10.00	7.75	17.25	120	W	SCD44
7.5	**C1F007JES**	NQ6A	12.25	9.25	17.63	162	W	SCD44
10	**C1F010JES**	NQ6	12.25	9.25	20.88	194	W	SCD44

600 Primary Volts 120/240 Secondary Volts 60 Hz

kVA	Catalog Number	Case Style (Pages 260 - 267)	Approx. Dimensions (Inches) Width	Depth	Height	Approx. Weight (Lbs.)	Mtg Type W - Wall F - Floor	Wiring Diagram (Pages 276 - 288)
0.05	**C1FC05PE**	NQ0	3.75	5.25	7.25	7	W	SCD4
0.10	**C1FC10PE**	NQ0	3.75	5.25	7.25	7	W	SCD4
0.15	**C1FC15PE**	NQ0	3.75	5.25	7.25	8	W	SCD4
0.25	**C1FC25PE**	NQ0	3.75	5.25	7.25	9	W	SCD4
0.35	**C1FC35PE**	NQ1	4.50	5.75	7.25	15	W	SCD4
0.50	**C1FC50PE**	NQ1	4.50	5.75	7.25	16	W	SCD4
0.75	**C1FC75PES**	NQ2	5.00	4.75	9.25	23	W	SCD4
1	**C1F1C0PES**	NQ3	5.88	5.50	10.50	24	W	SCD4
1.5	**C1F1C5PES**	NQ3	5.88	5.50	10.50	33	W	SCD4
2	**C1F002PES**	NQ4	7.00	6.50	11.75	42	W	SCD4
3	**C1F003PES**	NQ4	7.00	6.50	11.75	55	W	SCD4
5	**C1F005PES**	NQ5	10.00	7.75	17.25	120	W	SCD4
7.5	**C1F007PES**	NQ6A	12.25	9.25	17.63	148	W	SCD5
10	**C1F010PES**	NQ6	12.25	9.25	20.88	179	W	SCD5
15	**C1F015PES**	NQ7	14.50	10.75	21.38	265	W	SCD5
25	**C1F025PES**	NQ8	14.50	10.75	27.38	385	W	SCD5
37.5	**C1F037PES**	NQS10	21.88	18.50	31.00	598	F or W*	SCD5

*Optional wall mounting kit required. Refer to page 273 for details.

Export Model

190/200/208/220/240[1] X 380/400/416/440/480[1] Primary Volts 120/240 Secondary Volts 50/60 Hz

kVA	Catalog Number	Case Style (Pages 260 - 267)	Approx. Dimensions (Inches) Width	Depth	Height	Approx. Weight (Lbs.)	Mtg Type W - Wall F - Floor	Wiring Diagram (Pages 276 - 288)
0.05	**C1FC05XE**	NQ0	3.75	5.25	7.25	7	W	SCD28
0.10	**C1FC10XE**	NQ0	3.75	5.25	7.25	7	W	SCD28
0.15	**C1FC15XE**	NQ0	3.75	5.25	7.25	9	W	SCD28
0.25	**C1FC25XE**	NQ0	3.75	5.25	7.25	10	W	SCD28
0.35	**C1FC35XE**	NQ1	4.50	5.75	7.25	15	W	SCD28
0.50	**C1FC50XE**	NQ1	4.50	5.75	7.25	16	W	SCD28
0.75	**C1FC75XES**	NQ2	5.00	4.75	9.25	24	W	SCD28
1	**C1F1C0XES**	NQ3	5.88	5.50	10.50	32	W	SCD28
1.5	**C1F1C5XES**	NQ4	7.00	6.50	11.75	37	W	SCD28
2	**C1F002XES**	NQ4	7.00	6.50	11.75	52	W	SCD28
3	**C1F003XES**	NQ5	10.00	7.75	17.25	97	W	SCD2
5	**C1F005XES**	NQ5	10.00	7.75	17.25	120	W	SCD2
7.5	**C1F007XES**	NQ6A	12.25	9.25	17.63	148	W	SCD2
10	**C1F010XES**	NQ6	12.25	9.25	20.88	179	W	SCD2

Note [1]: The primary voltage ratio of 240 or 480 is available at 60Hz only with a secondary voltage of approximately 130/262V.

For accessories see pages 271-274

© Hammond Power Solutions Inc.
Data subject to change without notice.

HPS Fortress™

COMMERCIAL ENCAPSULATED DISTRIBUTION TRANSFORMERS

THREE PHASE STANDARD SPECIFICATIONS

2 TO 3 KVA

6 TO 75 KVA

	2 kVA to 3 kVA	6 kVA to 75 kVA
UL Listed	File: E50394	File: E50394
CSA Certified	File: LR3902	File: LR3902
Frequency	60 Hz (50/60 Hz)	60 Hz (50/60 Hz)
Insulation System	130°C standard on all units.	180°C standard on all units.
Electrostatic Shield	Standard on all units.	Standard on all units.
Encapsulation	All units are encapsulated with electrical grade silica sand and resin compounds.	All units are encapsulated with electrical grade silica sand and resin compounds.
Enclosure Type	NEMA Type 3R	NEMA Type 3R
Enclosure Finish	ANSI 61 Grey, UL50	ANSI 61 Grey, UL50
Termination	Top accessible separate high and low voltage lead wires or copper tabs.	Top accessible separate high and low voltage lead wires or copper tabs.
Conduit Knock-Outs	Standard side and rear knock-outs on all units.	Standard side and rear knock-outs on all units.
Impedance	Typically 4 to 8%	Typically 1 to 5%.
Mounting	Standard Wall Mounting Lifting provisions standard on all units.	Standard Wall Mounting up to (but not including) 15 kVA. (Optional wall mounting kit available for 15 kVA, 30 kVA and 45 kVa.) Floor mount only over 45 kVA. Lifting provisions standard 6 kVA to 75 kVA.
Sound Level	Meets NEMA ST-20 standards.	Meets NEMA ST-20 standards.

Other voltages and kVA ratings not listed in this section are available upon request. Please contact customer service for details, price and availability.

For accessories see pages 271-274.

© Hammond Power Solutions Inc.
Data subject to change without notice.

THREE PHASE, NEMA 3R STYLE ENCLOSURE

208 Primary Volts 208Y/120 Secondary Volts 60 Hz

kVA	Catalog Number	Case Style (Pages 260 - 267)	Approx. Dimensions (Inches) Width	Depth	Height	Approx. Weight (Lbs.)	Mtg Type W - Wall F - Floor	Wiring Diagram (Pages 276 - 288)
2	**C3F002BBS**	NQT3	12.38	5.44	11.13	50	W	SCD8
3	**C3F003BBS**	NQT3	12.38	5.44	11.13	70	W	SCD8
6	**C3F006BBS**	NQT5	16.63	10.25	16.63	140	W	SCD8
9	**C3F009BBS**	NQT6	19.25	10.44	16.63	210	W	SCD8
15	**C3F015BBS**	NQT7	20.25	13.00	23.38	350	F or W*	SCD8
30	**C3F030BBS**	NQT8	22.25	13.00	28.38	525	F or W*	SCD9
45	**C3F045BBS**	NQT9	31.50	16.00	29.88	700	F or W*	SCD9
75	**C3F075BBS**	NQT9A	34.63	18.50	36.75	1420	F	SCD9

*Optional wall mounting kit required.
Refer to page 273 for details.

208 Primary Volts 480Y/277 Secondary Volts 60 Hz

kVA	Catalog Number	Case Style (Pages 260 - 267)	Approx. Dimensions (Inches) Width	Depth	Height	Approx. Weight (Lbs.)	Mtg Type W - Wall F - Floor	Wiring Diagram (Pages 276 - 288)
2	**C3F002BKS**	NQT3	12.38	5.44	11.13	50	W	SCD23
3	**C3F003BKS**	NQT3	12.38	5.44	11.13	70	W	SCD23
6	**C3F006BKS**	NQT5	16.63	10.25	16.63	140	W	SCD23
9	**C3F009BKS**	NQT6	19.25	10.44	16.63	210	W	SCD23
15	**C3F015BKS**	NQT7	20.25	13.00	23.38	350	F or W*	SCD23
30	**C3F030BKS**	NQT8	22.25	13.00	28.38	525	F or W*	SCD26
45	**C3F045BKS**	NQT9	31.50	16.00	29.88	700	F or W*	SCD26
75	**C3F075BKS**	NQT9A	34.63	18.50	36.75	1420	F	SCD26

*Optional wall mounting kit required.
Refer to page 273 for details.

240 Primary Volts 208Y/120 Secondary Volts 60 Hz

kVA	Catalog Number	Case Style (Pages 260 - 267)	Approx. Dimensions (Inches) Width	Depth	Height	Approx. Weight (Lbs.)	Mtg Type W - Wall F - Floor	Wiring Diagram (Pages 276 - 288)
2	**C3F002DBS**	NQT3	12.38	5.44	11.13	50	W	SCD8
3	**C3F003DBS**	NQT3	12.38	5.44	11.13	70	W	SCD8
6	**C3F006DBS**	NQT5	16.63	10.25	16.63	140	W	SCD8
9	**C3F009DBS**	NQT6	19.25	10.44	16.63	210	W	SCD8
15	**C3F015DBS**	NQT7	20.25	13.00	23.38	350	F or W*	SCD8
30	**C3F030DBS**	NQT8	22.25	13.00	28.38	525	F or W*	SCD9
45	**C3F045DBS**	NQT9	31.50	16.00	29.88	700	F or W*	SCD9
75	**C3F075DBS**	NQT9A	34.63	18.50	36.75	1420	F	SCD9

*Optional wall mounting kit required.
Refer to page 273 for details

240 Primary Volts 480Y/277 Secondary Volts 60 Hz

kVA	Catalog Number	Case Style (Pages 260 - 267)	Approx. Dimensions (Inches) Width	Depth	Height	Approx. Weight (Lbs.)	Mtg Type W - Wall F - Floor	Wiring Diagram (Pages 276 - 288)
2	**C3F002DKS**	NQT3	12.38	5.44	11.13	50	W	SCD23
3	**C3F003DKS**	NQT3	12.38	5.44	11.13	70	W	SCD23
6	**C3F006DKS**	NQT5	16.63	10.25	16.63	140	W	SCD23
9	**C3F009DKS**	NQT6	19.25	10.44	16.63	210	W	SCD23
15	**C3F015DKS**	NQT7	20.25	13.00	23.38	350	F or W*	SCD23
30	**C3F030DKS**	NQT8	22.25	13.00	28.38	525	F or W*	SCD26
45	**C3F045DKS**	NQT9	31.50	16.00	29.88	700	F or W*	SCD26
75	**C3F075DKS**	NQT9A	34.63	18.50	36.75	1420	F	SCD26

*Optional wall mounting kit required.
Refer to page 273 for details.

For accessories see pages 271-274

© Hammond Power Solutions Inc.
Data subject to change without notice.

THREE PHASE, NEMA 3R STYLE ENCLOSURE

480 Primary Volts 208Y/120 Secondary Volts 60 Hz

kVA	Catalog Number	Case Style (Pages 260 - 267)	Approx. Dimensions (Inches) Width	Depth	Height	Approx. Weight (Lbs.)	Mtg Type W - Wall F - Floor	Wiring Diagram (Pages 276 - 288)
2	**C3F002KBS**	NQT3	12.38	5.44	11.13	50	W	SCD8
3	**C3F003KBS**	NQT3	12.38	5.44	11.13	70	W	SCD8
6	**C3F006KBS**	NQT5	16.63	10.25	16.63	140	W	SCD8
9	**C3F009KBS**	NQT6	19.25	10.44	16.63	210	W	SCD8
15	**C3F015KBS**	NQT7	20.25	13.00	23.38	350	F or W*	SCD8
30	**C3F030KBS**	NQT8	22.25	13.00	28.38	525	F or W*	SCD9
45	**C3F045KBS**	NQT9	31.50	16.00	29.88	700	F or W*	SCD9
75	**C3F075KBS**	NQT9A	34.63	18.50	36.75	1420	F	SCD9

*Optional wall mounting kit required.
Refer to page 273 for details.

480 Primary Volts 240D Secondary Volts 60 Hz

kVA	Catalog Number	Case Style (Pages 260 - 267)	Approx. Dimensions (Inches) Width	Depth	Height	Approx. Weight (Lbs.)	Mtg Type W - Wall F - Floor	Wiring Diagram (Pages 276 - 288)
2	**C3F002KDS**	NQT3	12.38	5.44	11.13	50	W	SCD12
3	**C3F003KDS**	NQT3	12.38	5.44	11.13	70	W	SCD12
6	**C3F006KDS**	NQT5	16.63	10.25	16.63	140	W	SCD12
9	**C3F009KDS**	NQT6	19.25	10.44	16.63	210	W	SCD12
15	**C3F015KDS**	NQT7	20.25	13.00	23.38	350	F or W*	SCD12
30	**C3F030KDS**	NQT8	22.25	13.00	28.38	525	F or W*	SCD38
45	**C3F045KDS**	NQT9	31.50	16.00	29.88	700	F or W*	SCD38
75	**C3F075KDS**	NQT9A	34.63	18.50	36.75	1420	F	SCD38

*Optional wall mounting kit required.
Refer to page 273 for details.

600 Primary Volts 208Y/120 Secondary Volts 60 Hz

kVA	Catalog Number	Case Style (Pages 260 - 267)	Approx. Dimensions (Inches) Width	Depth	Height	Approx. Weight (Lbs.)	Mtg Type W - Wall F - Floor	Wiring Diagram (Pages 276 - 288)
2	**C3F002PBS**	NQT3	12.38	5.44	11.13	50	W	SCD8
3	**C3F003PBS**	NQT3	12.38	5.44	11.13	70	W	SCD8
6	**C3F006PBS**	NQT5	16.63	10.25	16.63	140	W	SCD8
9	**C3F009PBS**	NQT6	19.25	10.44	16.63	210	W	SCD8
15	**C3F015PBS**	NQT7	20.25	13.00	23.38	350	F or W*	SCD8
30	**C3F030PBS**	NQT8	22.25	13.00	28.38	525	F or W*	SCD9
45	**C3F045PBS**	NQT9	31.50	16.00	29.88	700	F or W*	SCD9
75	**C3F075PBS**	NQT9A	34.63	18.50	36.75	1420	F	SCD9

*Optional wall mounting kit required.
Refer to page 273 for details.

600 Primary Volts 240D Secondary Volts 60 Hz

kVA	Catalog Number	Case Style (Pages 260 - 267)	Approx. Dimensions (Inches) Width	Depth	Height	Approx. Weight (Lbs.)	Mtg Type W - Wall F - Floor	Wiring Diagram (Pages 276 - 288)
2	**C3F002PDS**	NQT3	12.38	5.44	11.13	50	W	SCD12
3	**C3F003PDS**	NQT3	12.38	5.44	11.13	70	W	SCD12
6	**C3F006PDS**	NQT5	16.63	10.25	16.63	140	W	SCD12
9	**C3F009PDS**	NQT6	19.25	10.44	16.63	210	W	SCD12
15	**C3F015PDS**	NQT7	20.25	13.00	23.38	350	F or W*	SCD12
30	**C3F030PDS**	NQT8	22.25	13.00	28.38	525	F or W*	SCD45
45	**C3F045PDS**	NQT9	31.50	16.00	29.88	700	F or W*	SCD45
75	**C3F075PDS**	NQT9A	34.63	18.50	36.75	1420	F	SCD45

*Optional wall mounting kit required.
Refer to page 273 for details.

For accessories see pages 271-274.

© Hammond Power Solutions Inc.
Data subject to change without notice.

HPS TITAN® Applications

HPS has over 90 years of experience in the design and manufacture of dry-type transformers including those for harsh environments and hazardous location applications.

The terms “Harsh Environments” and “Hazardous Location” in many industries brings to the forefront the many difficult environments which may contain dangerous gases, liquids, dust, etc., that could lead to serious consequences. Products which are designed to operate in these hazardous environmental conditions must be safe, reliable and affordable.

HPS is the leader in the industry by our investment in providing a complete solution.

- **Advanced Encapsulated Harsh Environment and Hazardous Location Transformer Designs**
- **Standard Features Expected in the Industry**
- **Superior Quality in Materials and Workmanship**
- **Options and Accessories that Enhance the Product Line**
- **Value, Customer Service and Support**

The **HPS TITAN** line of encapsulated transformers have been designed for installation where safety is your priority, efficiency is a concern and the environment, location and application are key. Typical applications include institutional, industrial, petrochemical, marine, mining etc. HPS designs provide:

- **Safe Superior Performance**
- **Compact Efficient Design**
- **Easy Installation and Hook-up**

HPS TITAN series transformers are ***UL Listed*** for **“Class 1, Division 2, Groups A, B, C and D Hazardous Locations”** and are ***ABS Type Approved*** for “**Marine Duty Service and Offshore Applications - Electrical Distribution and Propulsion”**. A North American Temperature Classification of **T3A**, the **HPS TITAN** series will remain cool under load.

The **HPS TITAN** series of products are competitively priced for the rugged industrial and indoor and outdoor distribution transformer applications. HPS facilities have the most modern testing equipment for the requirements of ANSI, OSHA, UL, CSA, IEC, NEMA, ABS, DNV, BV, CE, etc.

Hammond Power Solutions . . . helping customers solve tough applications in today’s environments!

For accessories see pages 271-274

© Hammond Power Solutions Inc.
Data subject to change without notice.

HPS TITAN® Features and Benefits

- **Ratings:** Single phase from 0.50 kVA thru to 37.5 kVA; three phase from 2 kVA thru to 150 kVA
- **Approvals:** UL 1604 - File No. E258346 (**Class 1, Division 2, Groups A, B, C and D Hazardous Locations**)
  ABS Type Approval - Certificate No. 04-HS435190/1-PDA (Marine Duty Service and Offshore Applications)
- **Electrostatic Shield:** Standard on single phase units over 0.50 kVA and all three phase units; provides quality power and superior protection.
- **Quality Design:** All units are encapsulated with electrical grade silica sand and resin compounds which completely enclose the core and coil to seal out moisture, airborne contaminants and eliminates corrosion and deterioration.
- **Insulation:** Offering UL class 130°C insulation, 80°C temperature rise up to 1 kVA on single phase and 5 kVA on three phase; 180°C insulation, 115°C temperature rise on all single phase units over 1 kVA and 5 kVA three phase units. Quiet operation with sound levels below NEMA standards.
- **Enclosures:** NEMA 3R enclosures meet or exceed listing criteria including NEMA, ANSI, ABS and OSHA standards for indoor and outdoor service. On three phase units, convert to a NEMA 4 or 12 enclosure rating quickly and easily by ordering the HPS NEMA 4/12 Gasket Kit.
  Competitively priced stainless steel enclosures with stainless steel nameplates are also available.
- **Conduit knockouts:** Rear and side entry into an easily accessible and roomy wiring compartment.
- **Wiring compartment:** Provides copper lead wire terminations or copper tab and standard ground lug assembly for easy cable installation.
- **Installation made quick and easy:** Via keyhole mounting slots. Wall mounting available on all single phase units and three phase from 2 kVA to 15 kVA (excluding Q015QKKF). Lifting provisions are standard on all single phase and three phase units from 6 to 150 kVA.
- **Dual Nameplates:** All three phase units come standard with two nameplates. One on the front and an additional nameplate is located on the inside of the top cover. (1ph units have one standard nameplate only.)
- **Additional voltage groups and kVA sizes** are available upon request.
- **Warranty:** All HPS standard catalog encapsulated transformers come with a 10 year limited* warranty. *(Please refer to the Hammond Power Solutions "standard Catalog Transformer Products Warranty for details)

HPS TITAN
Single Phase

HPS TITAN
Three Phase

For accessories see pages 271-274.

© Hammond Power Solutions Inc.
Data subject to change without notice.

HPS TITAN® TRANSFORMERS FOR HARSH ENVIRONMENTS AND HAZARDOUS LOCATIONS

SINGLE PHASE STANDARD SPECIFICATIONS

0.50 TO 1 KVA

1.5 TO 37.5 KVA

	0.50 kVA to 1 kVA	1.5 kVA to 37.5 kVA
UL 1604, Class I, Division 2	File: E258346	File: E258346
ABS Type Approval (RQS)	Certificate No.: 04-HS435190/1-PDA	Certificate No.: 04-HS435190/1-PDA
Frequency	60 Hz (50/60 Hz on units with 380V primary)	60 Hz (50/60 Hz on units with 380V primary)
Insulation System	130°C (80°C rise) standard on all units.	180°C (115°C rise) standard on all units. Optional 130°C (80°C rise) available.
Electrostatic Shield	Optional on 0.50 kVA. Standard on 0.75 kVA and 1 kVA.	Standard on all units.
Encapsulation	All units are encapsulated with electrical grade silica sand and resin compounds.	All units are encapsulated with electrical grade silica sand and resin compounds.
Enclosure Type	Heavy Duty NEMA Type 3R Optional NEMA 4, 4X (stainless steel) and 12	Heavy Duty NEMA Type 3R Optional NEMA 4, 4X (stainless steel) and 12
Enclosure Finish	ANSI 61 Grey, UL50	ANSI 61 Grey, UL50
Termination	Front accessible separate high and low voltage lead wires or copper tabs.	Front accessible separate high and low voltage lead wires or copper tabs.
Conduit Knock-Outs	Standard side and rear knock-outs on all units.	Standard side and rear knock-outs on all units.
Impedance	Typically 5 to 10% on 0.50 kVA. Typically 1 to 5% on 0.75 kVA and 1 kVA	Typically 1 to 5%.
Mounting	Standard Wall Mounting Lifting provisions standard on all units.	Standard Wall Mounting Lifting provisions standard on units.
Seismic	Seismically certified in accordance with IBC 2009; Section 1613 Earthquake Loads, for S_{DS} <= 2.00g , z/h = 1.0, and I_P = 1.5	Seismically certified in accordance with IBC 2009; Section 1613 Earthquake Loads, for S_{DS} <= 2.00g , z/h = 1.0, and I_P = 1.5
Sound Level	Meets NEMA ST-20 standards. (Optional low noise units available on request)	Meets NEMA ST-20 standards. (Optional low noise units available on request)

Other voltages and kVA ratings not listed in this section are available upon request. Please contact customer service for details, price and availability.

All HPS TITAN single phase transformers are UL Listed for "Class 1, Division 2, Groups A, B, C and D Hazardous Locations" and are ABS Type Approved for "Marine Duty Service and Offshore Applications - Electrical Distribution and Propulsion". And with a North American Temperature Classification of T3A, the HPS TITAN series will remain cool under load.

FOR ACCESSORIES SEE PAGES 271-274

© Hammond Power Solutions Inc.
Data subject to change without notice.

SINGLE PHASE, NEMA 3R STYLE ENCLOSURE

c UL us LISTED

208/240/277 Primary Volts 120/240 Secondary Volts 60 Hz

kVA	Catalog Number	Case Style (Pages 260 - 267)	Approx. Dimensions (Inches) Width	Depth	Height	Approx. Weight (Lbs.)	Mtg Type W - Wall F - Floor	Wiring Diagram (Pages 276 - 288)
0.50	**QC50YECB**	NQ2	5.00	4.75	9.25	19	W	SCD 18
0.75	**QC75YEKB**	NQ2	5.00	4.75	9.25	21	W	SCD 18
1	**Q1C0YEKB**	NQ3	5.88	5.50	10.50	28	W	SCD 18
1.5	**Q1C5YEKF**	NQ3	5.88	5.50	10.50	36	W	SCD 18
2	**Q002YEKF**	NQ4	7.00	6.50	11.75	44	W	SCD 18
3	**Q003YEKF**	NQ4	7.00	6.50	11.75	56	W	SCD 18
5	**Q005YEKF**	NQ5	10.00	7.75	17.25	134	W	SCD 6
7.5	**Q007YEKF**	NQ5	10.00	7.75	17.25	160	W	SCD 6
10	**Q010YEKF**	NQ6	12.25	9.25	20.88	204	W	SCD 6
15	**Q015YEKF**	NQ6	12.25	9.25	20.88	248	W	SCD 6
25	**Q025YEKF**	NQ7	14.50	10.75	21.38	345	W	SCD 6
37.5	**Q037YEKF**	NQ8	14.50	10.75	27.38	476	W	SCD 6

For shielded 0.50 kVA units, replace the suffix "CB" with a "KB".

347/380 Primary Volts CE 120/240 Secondary Volts 50/60 Hz

kVA	Catalog Number	Case Style (Pages 260 - 267)	Approx. Dimensions (Inches) Width	Depth	Height	Approx. Weight (Lbs.)	Mtg Type W - Wall F - Floor	Wiring Diagram (Pages 276 - 288)
0.50	**QC50FECB**	NQ2	5.00	4.75	9.25	18	W	SCD 33
0.75	**QC75FEKB**	NQ2	5.00	4.75	9.25	20	W	SCD 33
1	**Q1C0FEKB**	NQ3	5.88	5.50	10.50	26	W	SCD 33
1.5	**Q1C5FEKF**	NQ3	5.88	5.50	10.50	36	W	SCD 33
2	**Q002FEKF**	NQ4	7.00	6.50	11.75	55	W	SCD 33
3	**Q003FEKF**	NQ5	10.00	7.75	17.25	98	W	SCD 44
5	**Q005FEKF**	NQ5	10.00	7.75	17.25	130	W	SCD 44
7.5	**Q007FEKF**	NQ6	12.25	9.25	20.88	145	W	SCD 44
10	**Q010FEKF**	NQ6	12.25	9.25	20.88	155	W	SCD 44
15	**Q015FEKF**	NQ6	12.25	9.25	20.88	248	W	SCD 44
25	**Q025FEKF**	NQ7	14.50	10.75	21.38	345	W	SCD 44
37.5	**Q037FEKF**	NQ8	14.50	10.75	27.38	476	W	SCD 48

For shielded 0.50 kVA units, replace the suffix "CB" with a "KB".

240 X 480 Primary Volts 120/240 Secondary Volts 60 Hz

kVA	Catalog Number	Case Style (Pages 260 - 267)	Approx. Dimensions (Inches) Width	Depth	Height	Approx. Weight (Lbs.)	Mtg Type W - Wall F - Floor	Wiring Diagram (Pages 276 - 288)
0.50	**QC50LECB**	NQ2	5.00	4.75	9.25	23	W	SCD 1
0.75	**QC75LEKB**	NQ2	5.00	4.75	9.25	24	W	SCD 1
1	**Q1C0LEKB**	NQ3	5.88	5.50	10.50	28	W	SCD 1
1.5	**Q1C5LEKF**	NQ3	5.88	5.50	10.50	35	W	SCD 1
2	**Q002LEKF**	NQ4	7.00	6.50	11.75	47	W	SCD 1
3	**Q003LEKF**	NQ4	7.00	6.50	11.75	62	W	SCD 1
5	**Q005LEKF**	NQ5	10.00	7.75	17.25	131	W	SCD 1
7.5	**Q007LEKF**	NQ5	10.00	7.75	17.25	155	W	SCD 2
10	**Q010LEKF**	NQ6	12.25	9.25	20.88	220	W	SCD 2
15	**Q015LEKF**	NQ6	12.25	9.25	20.88	248	W	SCD 2
25	**Q025LEKF**	NQ7	14.50	10.75	21.38	345	W	SCD 2
37.5	**Q037LEKF**	NQ8	14.50	10.75	27.38	476	W	SCD 2

For shielded 0.50 kVA units, replace the suffix "CB" with a "KB".

FOR ACCESSORIES SEE PAGES 271-274.

© Hammond Power Solutions Inc.
Data subject to change without notice.

c UL us LISTED

600 Primary Volts 120/240 Secondary Volts 60 Hz

kVA	Catalog Number	Case Style (Pages 260 - 267)	Approx. Dimensions (Inches) Width	Depth	Height	Approx. Weight (Lbs.)	Mtg Type W - Wall F - Floor	Wiring Diagram (Pages 276 - 288)
0.50	**QC50PECB**	NQ2	5.00	4.75	9.25	15	W	SCD 4
0.75	**QC75PEKB**	NQ2	5.00	4.75	9.25	18	W	SCD 4
1	**Q1C0PEKB**	NQ3	5.88	5.50	10.50	27	W	SCD 4
1.5	**Q1C5PEKF**	NQ3	5.88	5.50	10.50	31	W	SCD 4
2	**Q002PEKF**	NQ4	7.00	6.50	11.75	40	W	SCD 4
3	**Q003PEKF**	NQ4	7.00	6.50	11.75	52	W	SCD 4
5	**Q005PEKF**	NQ5	10.00	7.75	17.25	114	W	SCD 4
7.5	**Q007PEKF**	NQ5	10.00	7.75	17.25	129	W	SCD 5
10	**Q010PEKF**	NQ6	12.25	9.25	20.88	197	W	SCD 5
15	**Q015PEKF**	NQ6	12.25	9.25	20.88	234	W	SCD 5
25	**Q025PEKF**	NQ7	14.50	10.75	21.38	285	W	SCD 6
37.5	**Q037PEKF**	NQ8	14.50	10.75	27.38	454	W	SCD 6

For shielded 0.50 kVA units, replace the suffix "CB" with a "KB".

Export Model CE

190/200/208/220/240[1] X 380/400/415/440/480[1] Primary Volts 120/240 Secondary Volts 50/60 Hz

kVA	Catalog Number	Case Style (Pages 260 - 267)	Approx. Dimensions (Inches) Width	Depth	Height	Approx. Weight (Lbs.)	Mtg Type W - Wall F - Floor	Wiring Diagram (Pages 276 - 288)
0.50	**QC50XECB**	NQ2	5.00	4.75	9.25	15	W	SCD 28
0.75	**QC75XEKB**	NQ2	5.00	4.75	9.25	20	W	SCD 28
1	**Q1C0XEKB**	NQ3	5.88	5.50	10.50	32	W	SCD 28
1.5	**Q1C5XEKF**	NQ3	5.88	5.50	10.50	35	W	SCD 28
2	**Q002XEKF**	NQ4	7.00	6.50	11.75	54	W	SCD 28
3	**Q003XEKF**	NQ5	10.00	7.75	17.25	105	W	SCD 2
5	**Q005XEKF**	NQ5	10.00	7.75	17.25	138	W	SCD 2
7.5	**Q007XEKF**	NQ6	12.25	9.25	20.88	189	W	SCD 2
10	**Q010XEKF**	NQ6	12.25	9.25	20.88	222	W	SCD 2
15	**Q015XEKF**	NQ7	14.5	10.75	21.38	300	W	SCD 2
25	**Q025XEKF**				**CONSULT FACTORY**			
37.5	**Q037XEKF**				**CONSULT FACTORY**			

For shielded 0.50 kVA units, replace the suffix "CB" with a "KB". ***The above export model units carry the CE Mark.***

Note [1]: The primary voltage ratio of 240 or 480 is available at 60Hz only with a secondary voltage of approximately 130/262V.

For accessories see pages 271-274

© Hammond Power Solutions Inc.

Data subject to change without notice.

HPS TITAN TRANSFORMERS FOR HARSH ENVIRONMENTS AND HAZARDOUS LOCATIONS

THREE PHASE STANDARD SPECIFICATIONS

2 TO 5 KVA

6 TO 150 KVA

	2 kVA to 5 kVA	6 kVA to 150 kVA
UL 1604, Class I, Division 2	File: E258346	File: E258346
ABS Type Approval (RQS)	Certificate No.: 04-HS435190/1-PDA	Certificate No.: 04-HS435190/1-PDA
Frequency	60 Hz (50/60 Hz on units with 380V primary)	60 Hz (50/60 Hz on units with 380V primary)
Insulation System	130°C (80°C rise) standard on all units.	180°C (115°C rise) standard on all units. Optional 130°C (80°C rise) available.
Electrostatic Shield	Standard on all units.	Standard on all units.
Encapsulation	All units are encapsulated with electrical grade silica sand and resin compounds.	All units are encapsulated with electrical grade silica sand and resin compounds.
Enclosure Type	Heavy Duty NEMA Type 3R Optional NEMA 4, 4X (stainless steel) and 12	Heavy Duty NEMA Type 3R Optional NEMA 4, 4X (stainless steel) and 12
Enclosure Finish	ANSI 61 Grey, UL50	ANSI 61 Grey, UL50
Termination	Top accessible separate high and low voltage lead wires or copper tabs.	Top accessible separate high and low voltage lead wires or copper tabs.
Conduit Knock-Outs	Standard side and rear knock-outs on all units.	Standard side and rear knock-outs on all units.
Impedance	Typically 1 to 5%.	Typically 1 to 5%.
Mounting	Standard Wall Mounting.	Standard Wall Mounting up to 15 kVA (Optional wall mounting kit available for 30 kVA and 45 kVA). Floor Mount only over 45 kVA. Lifting provisions standard 6 kVA to 150 kVA.
Seismic	Seismically certified in accordance with IBC 2009; Section 1613 Earthquake Loads, for S_{DS} <= 2.00g , z/h = 1.0, and I_P = 1.5	Seismically certified in accordance with IBC 2009; Section 1613 Earthquake Loads, for S_{DS} <= 2.00g , z/h = 1.0, and I_P = 1.5
Sound Level	Meets NEMA ST-20 standards. (Optional low noise units available on request)	Meets NEMA ST-20 standards. (Optional low noise units available on request)

Other voltages and kVA ratings not listed in this section are available upon request. Please contact customer service for details, price and availability.

All HPS TITAN three phase transformers are UL Listed for "Class 1, Division 2, Groups A, B, C and D Hazardous Locations" and are ABS Type Approved for "Marine Duty Service and Offshore Applications - Electrical Distribution and Propulsion". And with a North American Temperature Classification of T3A, the HPS TITAN series will remain cool under load.

FOR ACCESSORIES SEE PAGES 271-274.

© Hammond Power Solutions Inc.
Data subject to change without notice.

THREE PHASE, NEMA 3R STYLE ENCLOSURE

c UL us LISTED

480 Delta Primary Volts 208Y/120 Secondary Volts 60 Hz

kVA	Catalog Number	Case Style (Pages 260 - 267)	Approx. Dimensions (Inches) Width	Depth	Height	Approx. Weight (Lbs.)	Mtg Type W - Wall F - Floor	Wiring Diagram (Pages 276 - 288)
2	**P002KBKB**	NQT3	12.38	5.44	12.39	49	W	SCD 8
3	**P003KBKB**	NQT3	12.38	5.44	12.39	86	W	SCD 8
6	**P006KBKF**	NQT4	15.19	6.94	16.39	160	W	SCD 8
9	**P009KBKF**	NQT5	16.63	10.25	17.89	262	W	SCD 8
15	**P015KBKF**	NQT6	19.25	10.44	17.89	304	W	SCD 7
30	**P030KBKF**	NQT7	20.25	13.00	23.38	478	F or W*	SCD 19
45	**P045KBKF**	NQT8	22.25	13.00	28.38	642	F or W*	SCD 19
75	**P075KBKF**	NQT9	31.25	16.00	29.88	1450	F	SCD 19
112.5	**P112KBKF**	NQT10	38.44	26.00	39.13	2100	F	SCD 19
150	**P150KBKF**	NQT11	37.38	30.00	45.63	2650	F	SCD 19

*Optional wall mounting kit required.
Refer to page 273 for details.

480 Delta Primary Volts 240 Delta Secondary Volts 60 Hz

kVA	Catalog Number	Case Style (Pages 260 - 267)	Approx. Dimensions (Inches) Width	Depth	Height	Approx. Weight (Lbs.)	Mtg Type W - Wall F - Floor	Wiring Diagram (Pages 276 - 288)
2	**P002KDKB**	NQT3	12.38	5.44	12.39	52	W	SCD 12
3	**P003KDKB**	NQT3	12.38	5.44	12.39	68	W	SCD 12
6	**P006KDKF**	NQT4	15.19	6.94	16.39	182	W	SCD 12
9	**P009KDKF**	NQT5	16.63	10.25	17.89	250	W	SCD 37
15	**P015KDKF**	NQT6	19.25	10.44	17.89	312	W	SCD 37
30	**P030KDKF**	NQT7	20.25	13.00	23.38	540	F or W*	SCD 38
45	**P045KDKF**	NQT8	22.25	13.00	28.38	650	F or W*	SCD 38
75	**P075KDKF**	NQT9	31.25	16.00	29.88	1230	F	SCD 38
112.5	**P112KDKF**	NQT10	38.44	26.00	39.13	2100	F	SCD 38
150	**P150KDKF**	NQT11	37.38	30.00	45.63	2650	F	SCD 38

*Optional wall mounting kit required.
Refer to page 273 for details.

600 Delta Primary Volts 208Y/120 Secondary Volts 60 Hz

kVA	Catalog Number	Case Style (Pages 260 - 267)	Approx. Dimensions (Inches) Width	Depth	Height	Approx. Weight (Lbs.)	Mtg Type W - Wall F - Floor	Wiring Diagram (Pages 276 - 288)
2	**P002PBKB**	NQT3	12.38	5.44	12.39	85	W	SCD 8
3	**P003PBKB**	NQT3	12.38	5.44	12.39	94	W	SCD 8
6	**P006PBKF**	NQT4	15.19	6.94	16.39	146	W	SCD 8
9	**P009PBKF**	NQT5	16.63	10.25	17.89	211	W	SCD 9
15	**P015PBKF**	NQT6	19.25	10.44	17.89	340	W	SCD 9
30	**P030PBKF**	NQT7	20.25	13.00	23.38	605	F or W*	SCD 9
45	**P045PBKF**	NQT8	22.25	13.00	28.38	770	F or W*	SCD 9
75	**P075PBKF**	NQT9	31.25	16.00	29.88	1350	F	SCD 9
112.5	**P112PBKF**	NQT10	38.44	26.00	39.13	3150	F	SCD 9
150	**P150PBKF**	NQT11	37.38	30.00	45.63	3200	F	SCD 9

*Optional wall mounting kit required.
Refer to page 273 for details.

For accessories see pages 271-274
© Hammond Power Solutions Inc.
Data subject to change without notice.

THREE PHASE, NEMA 3R STYLE ENCLOSURE

c UL us LISTED

600 Wye Primary Volts 240 Delta Secondary Volts 60 Hz

kVA	Catalog Number	Case Style (Pages 260 - 267)	Approx. Dimensions (Inches) Width	Depth	Height	Approx. Weight (Lbs.)	Mtg Type W - Wall F - Floor	Wiring Diagram (Pages 276 - 288)
2	**P002PDKB**	NQT3	12.38	5.44	12.39	51	W	SCD 27
3	**P003PDKB**	NQT3	12.38	5.44	12.39	68	W	SCD 27
6	**P006PDKF**	NQT4	15.19	6.94	16.39	146	W	SCD 27
9	**P009PDKF**	NQT5	16.63	10.25	17.89	211	W	SCD 29
15	**P015PDKF**	NQT6	19.25	10.44	17.89	270	W	SCD 29
30	**P030PDKF**	NQT7	20.25	13.00	23.38	515	F or W*	SCD 16
45	**P045PDKF**	NQT8	22.25	13.00	28.38	740	F or W*	SCD 16
75	**P075PDKF**	NQT9	31.25	16.00	29.88	CF	F	SCD 16
112.5	**P112PDKF**	NQT10	38.44	26.00	39.13	CF	F	SCD 16
150	**P150PDKF**	NQT11	37.38	30.00	45.63	CF	F	SCD 16

*Optional wall mounting kit required. Refer to page 273 for details.

600, 480 Delta Primary Volts 480Y/277 Secondary Volts 60 Hz

kVA	Catalog Number	Case Style (Pages 260 - 267)	Approx. Dimensions (Inches) Width	Depth	Height	Approx. Weight (Lbs.)	Mtg Type W - Wall F - Floor	Wiring Diagram (Pages 276 - 288)
2	**P002QKKB**	NQT3	12.38	5.44	12.39	65	W	SCD 20
3	**P003QKKB**	NQT3	12.38	5.44	12.39	69	W	SCD 20
6	**P006QKKF**	NQT4	15.19	6.94	16.39	190	W	SCD 20
9	**P009QKKF**	NQT5	16.63	10.25	17.89	270	W	SCD 47
15	**P015QKKF**	NQT7	20.25	13.00	23.38	380	F or W*	SCD 47
30	**P030QKKF**	NQT7	20.25	13.00	23.38	472	F or W*	SCD 11
45	**P045QKKF**	NQT8	22.25	13.00	28.38	680	F or W*	SCD 11
75	**P075QKKF**	NQT9	31.25	16.00	29.88	1650	F	SCD 11
112.5	**P112QKKF**	NQT10	38.44	26.00	39.13	CF	F	**Consult Factory**
150	**P150QKKF**	NQT11	37.38	30.00	45.63	CF	F	**Consult Factory**

*Optional wall mounting kit required. Refer to page 273 for details.

© Hammond Power Solutions Inc.
Data subject to change without notice.

SECTION 9

HPS POWERPLUS™ MINI POWER CENTERS

Aluminum, Single Phase Mini Power Centers

Applications & Features 242
Features and Benefits 243
Single Phase Selection Tables 244

Enclosure Dimensional Drawings 268
Wiring Schematic Drawings 289

HPS PowerPlus™ Mini Power Center

The Compact Economical Solution

The HPS PowerPlus™ is a convenient pre-wired power center that saves you time, money, and space. HPS PowerPlus combines a pre-wired primary and secondary main breaker, secondary power panel, and dry-type shielded transformer in a Type 3R enclosure.

It is ideal for applications such as in industrial locations, temporary power at construction sites, commercial buildings, test equipment, and plant assembly lines.

© Hammond Power Solutions Inc.
Data subject to change without notice.

Features and Benefits

- Type 3R indoor/outdoor enclosure (optional 316 Stainless Steel enclosure available)
- 480 Primary, 120/240 Secondary
- Single Phase
- 60 Hz Frequency
- 5, 7.5, 10, 15, 25 kVA available
- Shielded transformer
- 180° insulation class
- 115° temperature rise
- Primary taps: 2 - 5% FCBN
- Meet NEMA, ANSI, & OSHA standards
- 15 year limited warranty on transformer
- 1 year limited warranty on Mini Power Center

Transformer: HPS shielded transformers are encapsulated for general purpose indoor or outdoor use within a variety of environments. An electrostatic shield is placed between the primary and secondary winding and grounded to reduce electrical interference and to provide additional protection.

Panel Assembly: The HPS PowerPlus assembly comes fully equipped with a primary & secondary main circuit breaker. It will hold up to 20 1-pole or 10 2-pole, one inch, common trip, duplex secondary branch circuit breakers and ground fault circuit breakers. Once you have established your branch circuit requirements, contact your local distributor to obtain your branch circuit breakers.

Connections: HPS PowerPlus accepts Almuminum or Copper conductors.

Protection: The transformer is protected by the primary main breaker, which handles high interrupting fault conditions. The N.E.C. requires a secondary breaker to be between the transformer and the panel.

Approvals:
HPS PowerPlus™: c UL US LISTED

© Hammond Power Solutions Inc.
Data subject to change without notice.

ALUMINUM WOUND, SINGLE PHASE NEMA 3R STYLE ENCLOSURE

c UL US LISTED

480 Primary Volts 120/240 Secondary Volts 60 Hz

kVA	Catalog Number	Case Style (Pages 268 - 270)	Max. Secondary Circuits* 120 V (1 Pole)	240 V (2 Pole)	Approx. Dimensions (Inches) Width	Depth	Height	Approx. Weight (Lbs.)	Mtg Type W - Wall F - Floor	Wiring Diagram (Pages 289 - 290)
5	**M1PC005LESF**	PPE1	8	4	11.250	7.750	31.938	127	W	SCD 49
7.5	**M1PC007LESF**	PPE2	8	4	13.875	11.125	31.938	201	W	SCD 49
10	**M1PC010LESF**	PPE3	8	4	13.875	11.125	34.188	210	W	SCD 49
15	**M1PC015LESF**	PPE4	12	6	15.125	12.500	34.188	291	W	SCD 50
25	**M1PC025LESF**	PPE5	20	10	16.250	13.625	41.563	423	W	SCD 51

*Please contact factory for exact number of secondary circuits available
**Contact factory for copper information

ALUMINUM WOUND, SINGLE PHASE 316 STAINLESS STEEL ENCLOSURE

480 Primary Volts 120/240 Secondary Volts 60 Hz

kVA	Catalog Number	Case Style (Pages 268 - 270)	Max. Secondary Circuits* 120 V (1 Pole)	240 V (2 Pole)	Approx. Dimensions (Inches) Width	Depth	Height	Approx. Weight (Lbs.)	Mtg Type W - Wall F - Floor	Wiring Diagram (Pages 289 - 290)
5	**M1PC005LESF7**	PPE1	8	4	11.250	7.750	31.938	127	W	SCD 49
7.5	**M1PC007LESF7**	PPE2	8	4	13.875	11.125	31.938	201	W	SCD 49
10	**M1PC010LESF7**	PPE3	8	4	13.875	11.125	34.188	210	W	SCD 49
15	**M1PC015LESF7**	PPE4	12	6	15.125	12.500	34.188	291	W	SCD 50
25	**M1PC025LESF7**	PPE5	20	10	16.250	13.625	41.563	423	W	SCD 51

*Please contact factory for exact number of secondary circuits available
**Contact factory for copper information

© Hammond Power Solutions Inc.
Data subject to change without notice.

SECTION 10

AUTOTRANSFORMERS

600 Volt Class, Three Phase

Description and Applications 246

Three Phase Standard Specifications 247

Three Phase Selection Tables 248

Enclosure Dimensional Drawings 260

Accessories - Enclosure Mounting Kits, Anti-Vibration Pads & Isolators 271

GENERAL PURPOSE AUTOTRANSFORMERS

HPS three phase autotransformers are available for applications where small voltage corrections are necessary in a distribution system. They are frequently used as an economical alternative to general purpose distribution isolation transformers to adjust the supply voltage to match specific load requirements when load isolation from the supply line is not required. Autotransformers can be used as either a step-up or step-down transformer.

THREE PHASE STANDARD SPECIFICATIONS

3 TO (15)(30)(45) KVA

(30)(45)(75) TO 500 KVA

	3 kVA to (15)(30)(45) kVA	(30)(45)(75) to 500 kVA
UL Listed	File: E258346 (UL1604, Class I, Division 2)	File: E112313
CSA Certified	File: LR3902	File: LR3902
ABS Type Approval	Certificate No.: 04-HS435190/1-PDA	Optional
Frequency	60 Hz	60 Hz
Insulation System	130°C (80°C rise) standard on all units 180°C (115°C rise) standard on all encapsulated units	200°C (130°C rise) or 220°C (150°C rise) available.
Encapsulation	Select units are encapsulated with electrical grade silica sand and resin compounds.	Not Applicable (ventilated core and coil)
Enclosure Type	Heavy Duty NEMA Type 3R Optional NEMA 4, 4X (Stainless steel) and 12.	Heavy Duty NEMA Type 3R Optional NEMA 4, 4X (Stainless steel) and 12.
Termination	Top accessible separate high and low voltage lead wires or copper tabs.	Front accessible compartment with high and low voltage terminals; connectors suitable for copper provided where indicated.
Conduit Knock-Outs	Standard side and rear knock-outs on all units.	Standard side knock-outs on all units.
Impedance	Less than 3%.	Less than 3%.
Mounting	Refer to tables on the next page.	Refer to tables on next page.
Sound Level	Meets NEMA ST-20 standards. (Optional low noise available on request)	Meets NEMA ST-20 standards. (Optional low noise available on request)

Other voltages not listed in this section are available upon request. Please contact customer service for details, price and availability.

Note: Autotransformers incorporate a single winding design without isolation in a Wye configuration.

FOR ACCESSORIES SEE PAGES 271 TO 274

© Hammond Power Solutions Inc.
Data subject to change without notice.

THREE PHASE, NEMA 3R STYLE ENCLOSURE

600Y, 480Y Volts — 60 Hz
480Y, 380Y Volts** (Alternate Rating) — 50/60 Hz**

kVA 60 Hz	kVA 50/60 Hz	Catalog Number	Case Style (Pages 260 - 267)	Approx. Dimensions (Inches) Width	Depth	Height	Approx. Weight (Lbs.)	Mtg Type W - Wall F - Floor	Wiring Diagram (Pages 276 - 288)
3	2.4	**Y003PKCB**	NQT2	9.38	4.94	8.63	19	W	SCD 24
6	4.8	**Y006PKCB**	NQT2	9.38	4.94	8.63	26	W	SCD 24
9	7.2	**Y009PKCB**	NQT3	12.38	5.44	11.13	50	W	SCD 24
15	12	**Y015PKCB**	NQT3	12.38	5.44	11.13	60	W	SCD 24
30	24	**Y030PKCF**	NQT4	15.19	6.94	16.39	135	W	SCD 24
45	36	**Y045PKCN**	NH5	19.40	20.20	21.50	130	F or W*	SCD 24
75	60	**Y075PKCN**	NH5	19.40	20.20	21.50	170	F or W*	SCD 24
112.5	90	**Y112PKC**	NH6	23.90	25.00	28.75	245	F or W*	SCD 24
150	120	**Y150PKC**	NH6	23.90	25.00	28.75	285	F or W*	SCD 24
225	180	**Y225PKC**	NH6	23.90	25.00	28.75	360	F or W*	SCD 24
300	240	**Y300PKC**	NH3	26.00	21.00	38.00	500	F or W*	SCD 24
500	400	**Y500PKC**	NH3	26.00	21.00	38.00	650	F or W*	SCD 24

***Note: The kVA rating must be reduced for operation at the Alternative Rating 480Y, 380Y (50/60 Hz). Please refer to the 50/60 Hz column under kVA in the above table.*
Above units from 3 kVA to 30 kVA are encapsulated.
Optional neutral available upon request.

*Wall mounting kit and/or drip plate kit required. Refer to pages 271 to 273 for details.

600Y, 480Y, 400Y, 240Y 208Y Volts — 60 Hz

kVA	Catalog Number	Case Style (Pages 260 - 267)	Approx. Dimensions (Inches) Width	Depth	Height	Approx. Weight (Lbs.)	Mtg Type W - Wall F - Floor	Wiring Diagram (Pages 276 - 288)
3	**Y003QTCB**	NQT3	12.38	5.44	11.13	49	W	SCD 14
6	**Y006QTCB**	NQT3	12.38	5.44	11.13	69	W	SCD 14
9	**Y009QTCF**	NQT4	15.19	6.94	16.39	138	W	SCD 14
15	**Y015QTCF**	NQT4	15.19	6.94	16.39	170	W	SCD 14
30	**Y030QTCN**	NH5	19.40	20.20	21.50	210	F or W*	SCD 14
45	**Y045QTC**	NH6	23.90	25.00	28.75	305	F or W*	SCD 14
75	**Y075QTC**	NH6	23.90	25.00	28.75	400	F or W*	SCD 14
112.5	**Y112QTC**	NH3	26.00	21.00	38.00	585	F or W*	SCD 14
150	**Y150QTC**	NH3	26.00	21.00	38.00	685	F or W*	SCD 14
225	**Y225QTC**	NH4	32.00	29.50	41.00	980	F	SCD 14

Above units from 3 kVA to 15 kVA are encapsulated.
Optional neutral available upon request.

*Wall mounting kit and/or drip plate kit required. Refer to pages 271 to 273 for details.

240Y, 216Y, 208Y — 60 Hz

kVA	Catalog Number	Case Style (Pages 260 - 267)	Approx. Dimensions (Inches) Width	Depth	Height	Approx. Weight (Lbs.)	Mtg Type W - Wall F - Floor	Wiring Diagram (Pages 276 - 288)
3	**Y003CECB**	NQT2	9.38	4.94	8.63	19	W	SCD 15
6	**Y006CECB**	NQT2	9.38	4.94	8.63	28	W	SCD 15
9	**Y009CECB**	NQT3	12.38	5.44	11.13	49	W	SCD 15
15	**Y015CECB**	NQT3	12.38	5.44	11.13	58	W	SCD 15
30	**Y030CECF**	NQT4	15.19	6.94	16.39	115	W	SCD 15
45	**Y045CECF**	NQT4	15.19	6.94	16.39	130	W	SCD 15
75	**Y075CECN**	NH5	19.40	20.20	21.50	170	F or W*	SCD 15

Above units from 3 kVA to 45 kVA are encapsulated.
Optional neutral available upon request.

*Wall mounting kit and/or drip plate kit required. Refer to pages 271 to 273 for details.

Products listed on this page are available as 'CE Mark' products. Please consult our sales office.

For accessories see pages 271 to 274

© Hammond Power Solutions Inc.
Data subject to change without notice.

© Hammond Power Solutions Inc.

For accessories see pages 271 to 274

Data subject to change without notice.

SECTION 11

HPS MILLENNIUM™ GENERAL PURPOSE MEDIUM VOLTAGE DISTRIBUTION TRANSFORMERS

1.2 KV to 5KV Class Dry Type Single Phase and Three Phase

Medium Voltage Energy Efficient Guidelines 250

Energy Efficient Guidelines for U.S. 250

Energy Efficient Guidelines for Canada 251

Aluminum and Copper Standard Specifications..... 252

Single Phase Aluminum Selection Tables 253

Single Phase Copper Selection Tables 254

Three Phase Aluminum Selection Tables 255

Three Phase Copper Selection Tables 257

Enclosure Dimensional Drawings 260

Accessories - Enclosure Mounting Kits, Anti-Vibration Pads & Isolators 271

Termination Details 275

MEDIUM VOLTAGE DISTRIBUTION TRANSFORMER ENERGY EFFICIENCY GUIDELINES

In the past several years, there has been an accelerated rate of change to introduce energy efficiency standards for transformers in North America. In addition to the benefits to the environment, energy efficient transformers realize substantial savings in operating costs, thereby having a direct impact on the initial investment evaluated over a period of time.

United States - Energy Efficiency Regulations

In the U.S. all medium voltage dry-type distribution transformers (as defined below) manufactured after January 1st, 2010, must meet the minimum energy efficiency standards outlined in DOE 10 CFR Part 431. The range of product covered by these standards are:

Primary (high) Voltage		601V to 34.5 kV
Secondary (low) Voltage		600V and below
Dry-Type Rating	Single Phase	15-833 kVA
	Three Phase	15-2500 kVA
Frequency		60 Hz only

For transformers exempted from the DOE efficiency regulations please refer to the following DOE link:
http://www.access.gpo.gov/nara/cfr/waisidx_09/10cfr431_09.html

US Department of Energy DOE 10 CFR Part 431 Efficiency Levels Dry-Type Distribution Transformers - Medium Voltage							
Single Phase				Three Phase			
kVA	20 - 45 kV BIL Efficiency (%)	46 - 95 kV BIL Efficiency (%)	≥ 96 kV BIL Efficiency (%)	kVA	20 -45 kV BIL Efficiency (%)	46 - 95 kV BIL Efficiency (%)	≥ 96 kV BIL Efficiency (%)
15	98.10	97.86	-	15	97.50	97.18	-
25	98.33	98.12	-	30	97.90	97.63	-
37.5	98.49	98.30	-	45	98.10	97.86	-
50	98.60	98.42	-	75	98.33	98.12	-
75	98.73	98.57	98.53	112.5	98.49	98.30	-
100	98.82	98.67	98.63	150	98.60	98.42	-
167	98.96	98.83	98.80	225	98.73	98.57	98.53
250	99.07	98.95	98.91	300	98.82	98.67	98.63
333	99.14	99.03	98.99	500	98.96	98.83	98.80
500	99.22	99.12	99.09	750	99.07	98.95	98.91
667	99.27	99.18	99.15	1000	99.14	99.03	98.99
833	99.31	99.23	99.20	1500	99.22	99.12	99.09
				2000	99.27	99.18	99.15
				2500	99.31	99.23	99.20

All efficiency values are at 50% of nameplate-rated load at 75°C reference temperature.

For termination details see page 275

For accessories see pages 271 to 274

© Hammond Power Solutions Inc.
Data subject to change without notice.

MEDIUM VOLTAGE DISTRIBUTION TRANSFORMER ENERGY EFFICIENCY GUIDELINES

Canada - Energy Efficiency Regulations

In Canada, all medium voltage dry-type distribution transformers (as defined below) manufactured after January 1st, 2005, must meet the minimum energy efficiency guidelines as per CSA C802.2. NRCan has recently evaluated the U.S. DOE 10 CFR Part 431 efficiency levels and determined they are more cost effective and thus, suitable for use in Canada. As a result, in 2010 the Canadian Energy Efficiency Act - Energy Efficiency Regulations (SOR/94-651) will be updated and the regulation will harmonize the minimum efficiency levels with those established in the U.S. DOE 10 CFR Part 431. At the time of printing of this catalog, these harmonized efficiency levels were proposed only; but HPS believes these efficiency standards will be added to the Canadian Efficiency Regulations in the near future.

The range of product covered by these standards are:

Primary Voltage BIL Rating		> 1.2 kV class (≥ 20 kV BIL)
Secondary (low) Voltage Line Current		Less than 4000 Amps
Dry-Type Rating	Single Phase	15-833 kVA
	Three Phase	15-7500 kVA
Frequency		60 Hz only

For transformers exempted from the Canadian Efficiency Regulations please refer to the following NRCan link:
http://laws.justice.gc.ca/eng/sor-94-651/page-1.html

Canadian Energy Efficiency Act - Energy Efficiency Regulations
Efficiency Levels*
Dry-Type Distribution Transformers - Medium Voltage

Single Phase				Three Phase			
kVA	20 - 45 kV BIL Efficiency (%)	46 - 95 kV BIL Efficiency (%)	≥ 96 kV BIL Efficiency (%)	kVA	20 - 45 kV BIL Efficiency (%)	46 - 95 kV BIL Efficiency (%)	≥ 96 kV BIL Efficiency (%)
15	98.10	97.86	97.80	15	97.50	97.18	97.11
25	98.33	98.12	98.07	30	97.90	97.63	97.57
37.5	98.49	98.30	98.25	45	98.10	97.86	97.80
50	98.60	98.42	98.37	75	98.33	98.12	98.07
75	98.73	98.57	98.53	112.5	98.49	98.30	98.25
100	98.82	98.67	98.63	150	98.60	98.42	98.37
167	98.96	98.83	98.80	225	98.73	98.57	98.53
250	99.07	98.95	98.91	300	98.82	98.67	98.63
333	99.14	99.03	98.99	500	98.96	98.83	98.80
500	99.22	99.12	99.09	750	99.07	98.95	98.91
667	99.27	99.18	99.15	1000	99.14	99.03	98.99
833	99.31	99.23	99.20	1500	99.22	99.12	99.09
				2000	99.27	99.18	99.15
				2500	99.31	99.23	99.20
				3000	99.34	99.26	99.24
				3750	99.38	99.30	99.28
				5000	99.42	99.35	99.33
				7500	99.48	99.41	99.39

All efficiency values are at 50% of nameplate-rated load at 75°C reference temperature.

For termination details see page 275
For accessories see pages 271 to 274

© Hammond Power Solutions Inc.
Data subject to change without notice.

1.2KV to 5KV CLASS DISTRIBUTION TRANSFORMERS

HPS Millennium™ energy efficient medium voltage distribution transformers are designed for stepping down incoming higher voltage power to utilize voltages for commercial, institutional or industrial applications. The standard NEMA 3R ventilated construction is suitable for indoor or outdoor applications.

ALUMINUM & COPPER WOUND STANDARD SPECIFICATIONS

SINGLE PHASE

THREE PHASE

	15 to 333 kVA	15 to 1500 kVA
Efficiency (where applicable)	Meets U.S. DOE CFR Part 431 and the Canadian Efficiency Regulations efficiency levels at 50% of rated load. Efficiencies are calculated under a linear load profile.	
UL Listed	File: E147879	File: E147879
CSA Certified	File: LR3902	File: LR3902
Frequency	60 Hz	60 Hz
Insulation System	220°C (150°C rise) 180°C (115°C rise) on some units (Optional 115°C and 80°C rise available)	220°C (150°C rise) 180°C (115°C rise) on some units (Optional 115°C and 80°C rise available)
Enclosure Type	Heavy Duty Ventilated NEMA Type 3R (Optional NEMA 4, 4X and 12 available)	Heavy Duty Ventilated NEMA Type 3R (Optional NEMA 4, 4X and 12 available)
Enclosure Finish	ANSI 61 Grey, UL50	ANSI 61 Grey, UL50
Standard Primary Taps	Refer to wiring diagrams for details.	Refer to wiring diagrams for details.
Termination	Front accessible separate high and low voltage terminals; connectors suitable for aluminum and copper are provided for easy cable installation.	Front accessible separate high and low voltage terminals; connectors suitable for aluminum and copper are provided for easy cable installation.
Conduit Knock-Outs	Standard on most units up to 100 kVA.	Standard on units up to 150 kVA
Impedance	Typically 2 to 5%	Typically 3 to 6%
Mounting	Floor or wall/ceiling mounting available. Refer to selection tables for details.	Floor or wall/ceiling mounting available. Refer to selection tables for details.
Seismic	Seismically certified in accordance with IBC 2009; Section 1613 Earthquake Loads, for S_{DS} <= 2.00g , z/h = 1.0, and I_P = 1.5	Seismically certified in accordance with IBC 2009; Section 1613 Earthquake Loads, for S_{DS} <= 2.00g , z/h = 1.0, and I_P = 1.5

Other voltages not listed in this section are available upon request for both aluminum and copper wound units. Please contact customer service for details, price and availability.

For termination details see page 275

For accessories see pages 271 to 274

© Hammond Power Solutions Inc.

Data subject to change without notice.

ALUMINUM WOUND, SINGLE PHASE, NEMA 3R STYLE ENCLOSURE

2400 Primary Volts 120/240 Secondary Volts 60 Hz

kVA	Catalog Number	Case Style (Pages 260 - 267)	Approx. Dimensions (Inches) Width	Depth	Height	Approx. Weight (Lbs.)	Mtg Type W - Wall F - Floor	Wiring Diagram (Pages 276 - 288)
15	**MV1S015REAF**	NH6	23.90	25.00	28.75	290	F or W *	SCD 6
25	**MV1S025RE**	NH6	23.90	25.00	28.75	350	F or W *	SCD 6
37.5	**MV1S037RE**	NH6	23.90	25.00	28.75	420	F or W *	SCD 6
50	**MV1S050RE**	NH3	26.00	25.00	38.00	570	F or W *	SCD 6
75	**MV1S075RE**	NH3	26.00	25.00	38.00	660	F or W *	SCD 6
100	**MV1S100RE**	NH4	32.00	29.50	41.00	810	F	SCD 6
150	**MV1S150RE**	NJ4	32.00	32.50	50.00	1280	F	SCD 6
167	**MV1S167RE**	NJ4	32.00	32.50	50.00	1320	F	SCD 6
250	**MV1S250RE**	NJ4	32.00	32.50	50.00	1560	F	SCD 6
333	**MV1S333RE**	NJ2	48.50	38.40	59.00	1980	F	SCD 6

For shielded units, please add the suffix "S" to the above part numbers.

*Wall mounting kit and/or drip plate kit required. Refer to pages 271 to 273 for details.

4160 Primary Volts 120/240 Secondary Volts 60 Hz

kVA	Catalog Number	Case Style (Pages 260 - 267)	Approx. Dimensions (Inches) Width	Depth	Height	Approx. Weight (Lbs.)	Mtg Type W - Wall F - Floor	Wiring Diagram (Pages 276 - 288)
15	**MV1S015SEAF**	NH6	23.90	25.00	28.75	290	F or W *	SCD 6
25	**MV1S025SEAF**	NH6	23.90	25.00	28.75	350	F or W *	SCD 6
37.5	**MV1S037SE**	NH6	23.90	25.00	28.75	420	F or W *	SCD 6
50	**MV1S050SE**	NH3	26.00	25.00	38.00	570	F or W *	SCD 6
75	**MV1S075SE**	NH3	26.00	25.00	38.00	660	F or W *	SCD 6
100	**MV1S100SE**	NH4	32.00	29.50	41.00	810	F	SCD 6
150	**MV1S150SE**	NJ4	32.00	32.50	50.00	1280	F	SCD 6
167	**MV1S167SE**	NJ4	32.00	32.50	50.00	1320	F	SCD 6
250	**MV1S250SE**	NJ4	32.00	32.50	50.00	1560	F	SCD 6
333	**MV1S333SE**	NJ2	48.50	38.40	59.00	1980	F	SCD 6

For shielded units, please add the suffix "S" to the above part numbers.

*Wall mounting kit and/or drip plate kit required. Refer to pages 271 to 273 for details.

For termination details see page 275

For accessories see pages 271 to 274

© Hammond Power Solutions Inc.
Data subject to change without notice.

COPPER WOUND, SINGLE PHASE, NEMA 3R STYLE ENCLOSURE

2400 Primary Volts 120/240 Secondary Volts 60 Hz

kVA	Catalog Number	Case Style (Pages 260 - 267)	Approx. Dimensions (Inches) Width	Depth	Height	Approx. Weight (Lbs)	Mtg Type W - Wall F - Floor	Wiring Diagram (Pages 276 - 288)
15	**MV1S015RECF**	NH6	23.90	25.00	28.75	320	F or W *	SCD 6
25	**MV1S025RECF**	NH6	23.90	25.00	28.75	390	F or W *	SCD 6
37.5	**MV1S037RECF**	NH6	23.90	25.00	28.75	480	F or W *	SCD 6
50	**MV1S050RECF**	NH3	26.00	25.00	38.00	660	F or W *	SCD 6
75	**MV1S075REC**	NH3	26.00	25.00	38.00	770	F	SCD 6
100	**MV1S100REC**	NH4	32.00	29.50	41.00	970	F	SCD 6
150	**MV1S150REC**	NJ4	32.00	32.50	50.00	1300	F	SCD 6
167	**MV1S167REC**	NJ4	32.00	32.50	50.00	1440	F	SCD 6
250	**MV1S250REC**	NJ4	32.00	32.50	50.00	1800	F	SCD 6
333	**MV1S333REC**	NJ2	48.50	38.40	59.00	2280	F	SCD 6

For shielded units, please replace the letter "C" with a "K" in the above part numbers..

*WALL MOUNTING KIT AND/OR DRIP PLATE KIT REQUIRED. REFER TO PAGES 271 TO 273 FOR DETAILS.

4160 Primary Volts 120/240 Secondary Volts 60 Hz

kVA	Catalog Number	Case Style (Pages 260 - 267)	Approx. Dimensions (Inches) Width	Depth	Height	Approx. Weight (Lbs)	Mtg Type W - Wall F - Floor	Wiring Diagram (Pages 276 - 288)
15	**MV1S015SECF**	NH6	23.90	25.00	28.75	320	F or W *	SCD 6
25	**MV1S025SECF**	NH6	23.90	25.00	28.75	390	F or W *	SCD 6
37.5	**MV1S037SECF**	NH6	23.90	25.00	28.75	480	F or W *	SCD 6
50	**MV1S050SECF**	NH3	26.00	25.00	38.00	660	F or W *	SCD 6
75	**MV1S075SEC**	NH3	26.00	25.00	38.00	770	F	SCD 6
100	**MV1S100SEC**	NH4	32.00	29.50	41.00	970	F	SCD 6
150	**MV1S150SEC**	NJ4	32.00	32.50	50.00	1300	F	SCD 6
167	**MV1S167SEC**	NJ4	32.00	32.50	50.00	1440	F	SCD 6
250	**MV1S250SEC**	NJ4	32.00	32.50	50.00	1800	F	SCD 6
333	**MV1S333SEC**	NJ2	48.50	38.40	59.00	2280	F	SCD 6

For shielded units, please replace the letter "C" with a "K" in the above part numbers.

*WALL MOUNTING KIT AND/OR DRIP PLATE KIT REQUIRED. REFER TO PAGES 271 TO 273 FOR DETAILS.

FOR TERMINATION DETAILS SEE PAGE 275

FOR ACCESSORIES SEE PAGES 271 TO 274

© Hammond Power Solutions Inc.

Data subject to change without notice.

ALUMINUM WOUND, THREE PHASE, NEMA 3R STYLE ENCLOSURE

2400 Delta Primary Volts — 208Y/120 Secondary Volts — 60 Hz

kVA	Catalog Number	Case Style (Pages 260 - 267)	Approx. Dimensions (Inches) Width	Depth	Height	Approx. Weight (Lbs)	Mtg Type W - Wall F - Floor	Wiring Diagram (Pages 276 - 288)
*15	**MV3S015RBAF**	NH6	23.90	25.00	28.75	350	F or W *	SCD 8
*30	**MV3S030RBAF**	NH6	23.90	25.00	28.75	425	F or W *	SCD 10
45	**MV3S045RBAF**	NH3	26.00	25.00	38.00	600	F or W *	SCD 10
75	**MV3S075RB**	NH4	32.00	29.50	41.00	800	F	SCD 10
112.5	**MV3S112RB**	NH4	32.00	29.50	41.00	1200	F	SCD 10
150	**MV3S150RB**	NJ1	39.50	34.00	51.50	1400	F	SCD 10
225	**MV3S225RB**	NJ1	39.50	34.00	51.50	1600	F	SCD 10
300	**MV3S300RB**	NJ1	39.50	34.00	51.50	1800	F	SCD 10
500	**MV3S500RB**	NJ2	48.50	38.40	59.00	2600	F	SCD 10
750	**MV3S750RB**	NJ6	64.00	44.40	71.00	4200	F	SCD 10
1000	**MV3S1000RB**	NJ6	64.00	44.40	71.00	4500	F	SCD 10
1250	**MV3S1250RB**	NJ6	64.00	44.40	71.00	5300	F	SCD 10
1500	**MV3S1500RB**	NJ7	64.00	51.40	75.00	6300	F	SCD 10

** Aluminum/Copper units have 115°C temperature rise.*
For shielded units, please add the suffix "S" to the above part numbers.

*Wall mounting kit and/or drip plate kit required. Refer to pages 271 to 273 for details.

2400 Delta Primary Volts — 480Y/277 Secondary Volts — 60 Hz

kVA	Catalog Number	Case Style (Pages 260 - 267)	Approx. Dimensions (Inches) Width	Depth	Height	Approx. Weight (Lbs)	Mtg Type W - Wall F - Floor	Wiring Diagram (Pages 276 - 288)
*15	**MV3S015RKAF**	NH6	23.90	25.00	28.75	350	F or W *	SCD 8
*30	**MV3S030RKAF**	NH6	23.90	25.00	28.75	425	F or W *	SCD 10
45	**MV3S045RKAF**	NH3	26.00	25.00	38.00	600	F or W *	SCD 10
75	**MV3S075RK**	NH4	32.00	29.50	41.00	800	F	SCD 10
112.5	**MV3S112RK**	NH4	32.00	29.50	41.00	1200	F	SCD 10
150	**MV3S150RK**	NJ1	39.50	34.00	51.50	1400	F	SCD 10
225	**MV3S225RK**	NJ1	39.50	34.00	51.50	1600	F	SCD 10
300	**MV3S300RK**	NJ1	39.50	34.00	51.50	1800	F	SCD 10
500	**MV3S500RK**	NJ2	48.50	38.40	59.00	2600	F	SCD 10
750	**MV3S750RK**	NJ6	64.00	44.40	71.00	4200	F	SCD 10
1000	**MV3S1000RK**	NJ6	64.00	44.40	71.00	4500	F	SCD 10
1250	**MV3S1250RK**	NJ6	64.00	44.40	71.00	5300	F	SCD 10
1500	**MV3S1500RK**	NJ7	64.00	51.40	75.00	6300	F	SCD 10

** Aluminum/Copper units have 115°C temperature rise.*
For shielded units, please add the suffix "S" to the above part numbers.

*Wall mounting kit and/or drip plate kit required. Refer to pages 271 to 273 for details.

2400 Delta Primary Volts — 600Y/347 Secondary Volts — 60 Hz

kVA	Catalog Number	Case Style (Pages 260 - 267)	Approx. Dimensions (Inches) Width	Depth	Height	Approx. Weight (Lbs)	Mtg Type W - Wall F - Floor	Wiring Diagram (Pages 276 - 288)
*15	**MV3S015RPAF**	NH6	23.90	25.00	28.75	350	F or W *	SCD 8
*30	**MV3S030RPAF**	NH6	23.90	25.00	28.75	425	F or W *	SCD 10
45	**MV3S045RPAF**	NH3	26.00	25.00	38.00	600	F or W *	SCD 10
75	**MV3S075RP**	NH4	32.00	29.50	41.00	800	F	SCD 10
112.5	**MV3S112RP**	NH4	32.00	29.50	41.00	1200	F	SCD 10
150	**MV3S150RP**	NJ1	39.50	34.00	51.50	1400	F	SCD 10
225	**MV3S225RP**	NJ1	39.50	34.00	51.50	1600	F	SCD 10
300	**MV3S300RP**	NJ1	39.50	34.00	51.50	1800	F	SCD 10
500	**MV3S500RP**	NJ2	48.50	38.40	59.00	2600	F	SCD 10
750	**MV3S750RP**	NJ6	64.00	44.40	71.00	4200	F	SCD 10
1000	**MV3S1000RP**	NJ6	64.00	44.40	71.00	4600	F	SCD 10
1250	**MV3S1250RP**	NJ6	64.00	44.40	71.00	5200	F	SCD 10
1500	**MV3S1500RP**	NJ7	64.00	51.40	75.00	6300	F	SCD 10

** Aluminum/Copper units have 115°C temperature rise.*
For shielded units, please add the suffix "S" to the above part numbers.

*Wall mounting kit and/or drip plate kit required. Refer to pages 271 to 273 for details.

For termination details see page 275
For accessories see pages 271 to 274

© Hammond Power Solutions Inc.
Data subject to change without notice.

ALUMINUM WOUND, THREE PHASE, NEMA 3R STYLE ENCLOSURE

4160 Delta Primary Volts 208Y/120 Secondary Volts 60 Hz

kVA	Catalog Number	Case Style (Pages 260 - 267)	Approx. Dimensions (Inches) Width	Depth	Height	Approx. Weight (Lbs)	Mtg Type W - Wall F - Floor	Wiring Diagram (Pages 276 - 288)
*15	**MV3S015SBAF**	NH6	23.90	25.00	28.75	350	F or W *	SCD 8
*30	**MV3S030SBAF**	NH6	23.90	25.00	28.75	425	F or W *	SCD 10
45	**MV3S045SBAF**	NH3	26.00	25.00	38.00	600	F or W *	SCD 10
75	**MV3S075SBAF**	NH4	32.00	29.50	41.00	800	F	SCD 10
112.5	**MV3S112SBAF**	NH4	32.00	29.50	41.00	1200	F	SCD 10
150	**MV3S150SB**	NJ1	39.50	34.00	51.50	1400	F	SCD 10
225	**MV3S225SB**	NJ1	39.50	34.00	51.50	1600	F	SCD 10
300	**MV3S300SB**	NJ1	39.50	34.00	51.50	1800	F	SCD 10
500	**MV3S500SB**	NJ2	48.50	38.40	59.00	2600	F	SCD 10
750	**MV3S750SB**	NJ6	64.00	44.40	71.00	4200	F	SCD 10
1000	**MV3S1000SB**	NJ6	64.00	44.40	71.00	4600	F	SCD 10
1250	**MV3S1250SB**	NJ6	64.00	44.40	71.00	5300	F	SCD 10
1500	**MV3S1500SB**	NJ7	64.00	51.40	75.00	6300	F	SCD 10

** Aluminum/Copper units have 115°C temperature rise.*
For shielded units, please add the suffix "S" to the above part numbers.

*Wall mounting kit and/or drip plate kit required. Refer to pages 271 to 273 for details.

4160 Delta Primary Volts 480Y/277 Secondary Volts 60 Hz

kVA	Catalog Number	Case Style (Pages 260 - 267)	Approx. Dimensions (Inches) Width	Depth	Height	Approx. Weight (Lbs)	Mtg Type W - Wall F - Floor	Wiring Diagram (Pages 276 - 288)
*15	**MV3S015SKAF**	NH6	23.90	25.00	28.75	350	F or W *	SCD 8
*30	**MV3S030SKAF**	NH6	23.90	25.00	28.75	425	F or W *	SCD 10
45	**MV3S045SKAF**	NH3	26.00	25.00	38.00	600	F or W *	SCD 10
75	**MV3S075SKAF**	NH4	32.00	29.50	41.00	800	F	SCD 10
112.5	**MV3S112SKAF**	NH4	32.00	29.50	41.00	1200	F	SCD 10
150	**MV3S150SK**	NJ1	39.50	34.00	51.50	1400	F	SCD 10
225	**MV3S225SK**	NJ1	39.50	34.00	51.50	1600	F	SCD 10
300	**MV3S300SK**	NJ1	39.50	34.00	51.50	1800	F	SCD 10
500	**MV3S500SK**	NJ2	48.50	38.40	59.00	2600	F	SCD 10
750	**MV3S750SK**	NJ6	64.00	44.40	71.00	4200	F	SCD 10
1000	**MV3S1000SK**	NJ6	64.00	44.40	71.00	4500	F	SCD 10
1250	**MV3S1250SK**	NJ6	64.00	44.40	71.00	5300	F	SCD 10
1500	**MV3S1500SK**	NJ7	64.00	51.40	75.00	6300	F	SCD 10

** Aluminum/Copper units have 115°C temperature rise.*
For shielded units, please add the suffix "S" to the above part numbers.

*Wall mounting kit and/or drip plate kit required. Refer to pages 271 to 273 for details.

4160 Delta Primary Volts 600Y/347 Secondary Volts 60 Hz

kVA	Catalog Number	Case Style (Pages 260 - 267)	Approx. Dimensions (Inches) Width	Depth	Height	Approx. Weight (Lbs)	Mtg Type W - Wall F - Floor	Wiring Diagram (Pages 276 - 288)
*15	**MV3S015SPAF**	NH6	23.90	25.00	28.75	350	F or W *	SCD 8
*30	**MV3S030SPAF**	NH6	23.90	25.00	28.75	425	F or W *	SCD 10
45	**MV3S045SPAF**	NH3	26.00	25.00	38.00	600	F or W *	SCD 10
75	**MV3S075SPAF**	NH4	32.00	29.50	41.00	800	F	SCD 10
112.5	**MV3S112SPAF**	NH4	32.00	29.50	41.00	1200	F	SCD 10
150	**MV3S150SP**	NJ1	39.50	34.00	51.50	1400	F	SCD 10
225	**MV3S225SP**	NJ1	39.50	34.00	51.50	1600	F	SCD 10
300	**MV3S300SP**	NJ1	39.50	34.00	51.50	1800	F	SCD 10
500	**MV3S500SP**	NJ2	48.50	38.40	59.00	2600	F	SCD 10
750	**MV3S750SP**	NJ6	64.00	44.40	71.00	4200	F	SCD 10
1000	**MV3S1000SP**	NJ6	64.00	44.40	71.00	4600	F	SCD 10
1250	**MV3S1250SP**	NJ6	64.00	44.40	71.00	5200	F	SCD 10
1500	**MV3S1500SP**	NJ7	64.00	51.40	75.00	6300	F	SCD 10

** Aluminum/Copper units have 115°C temperature rise.*
For shielded units, please add the suffix "S" to the above part numbers.

*Wall mounting kit and/or drip plate kit required. Refer to pages 271 to 273 for details.

For termination details see page 275

For accessories see pages 271 to 274

© Hammond Power Solutions Inc.

Data subject to change without notice.

COPPER WOUND, THREE PHASE, NEMA 3R STYLE ENCLOSURE

2400 Delta Primary Volts 208Y/120 Secondary Volts 60 Hz

kVA	Catalog Number	Case Style (Pages 260 - 267)	Approx. Dimensions (Inches) Width	Depth	Height	Approx. Weight (Lbs)	Mtg Type W - Wall F - Floor	Wiring Diagram (Pages 276 - 288)
15	**MV3S015RBCF**	NH6	23.90	25.00	28.75	400	F or W *	SCD 8
30	**MV3S030RBCF**	NH6	23.90	25.00	28.75	500	F or W *	SCD 10
45	**MV3S045RBCF**	NH3	26.00	25.00	38.00	600	F or W *	SCD 10
75	**MV3S075RBCF**	NH4	32.00	29.50	41.00	900	F	SCD 10
112.5	**MV3S112RBCF**	NH4	32.00	29.50	41.00	1100	F	SCD 10
150	**MV3S150RBC**	NJ1	39.50	34.00	51.50	1500	F	SCD 10
225	**MV3S225RBC**	NJ1	39.50	34.00	51.50	1700	F	SCD 10
300	**MV3S300RBC**	NJ1	39.50	34.00	51.50	1900	F	SCD 10
500	**MV3S500RBC**	NJ2	48.50	38.40	59.00	3000	F	SCD 10
750	**MV3S750RBC**	NJ6	64.00	44.40	71.00	4200	F	SCD 10
1000	**MV3S1000RBC**	NJ6	64.00	44.40	71.00	4800	F	SCD 10
1250	**MV3S1250RBC**	NJ6	64.00	44.40	71.00	6200	F	SCD 10
1500	**MV3S1500RBC**	NJ7	64.00	51.40	75.00	6600	F	SCD 10

For shielded units, please replace the letter "C" with a "K" in the above part numbers.

*Wall mounting kit and/or drip plate kit required. Refer to pages 271 to 273 for details.

2400 Delta Primary Volts 480Y/277 Secondary Volts 60 Hz

kVA	Catalog Number	Case Style (Pages 260 - 267)	Approx. Dimensions (Inches) Width	Depth	Height	Approx. Weight (Lbs)	Mtg Type W - Wall F - Floor	Wiring Diagram (Pages 276 - 288)
15	**MV3S015RKCF**	NH6	23.90	25.00	28.75	400	F or W *	SCD 8
30	**MV3S030RKCF**	NH6	23.90	25.00	28.75	500	F or W *	SCD 10
45	**MV3S045RKCF**	NH3	26.00	25.00	38.00	600	F or W *	SCD 10
75	**MV3S075RKCF**	NH4	32.00	29.50	41.00	900	F	SCD 10
112.5	**MV3S112RKCF**	NH4	32.00	29.50	41.00	1100	F	SCD 10
150	**MV3S150RKC**	NJ1	39.50	34.00	51.50	1500	F	SCD 10
225	**MV3S225RKC**	NJ1	39.50	34.00	51.50	1600	F	SCD 10
300	**MV3S300RKC**	NJ1	39.50	34.00	51.50	1900	F	SCD 10
500	**MV3S500RKC**	NJ2	48.50	38.40	59.00	3000	F	SCD 10
750	**MV3S750RKC**	NJ6	64.00	44.40	71.00	4200	F	SCD 10
1000	**MV3S1000RKC**	NJ6	64.00	44.40	71.00	4800	F	SCD 10
1250	**MV3S1250RKC**	NJ6	64.00	44.40	71.00	6200	F	SCD 10
1500	**MV3S1500RKC**	NJ7	64.00	51.40	75.00	6600	F	SCD 10

For shielded units, please replace the letter "C" with a "K" in the above part numbers.

*Wall mounting kit and/or drip plate kit required. Refer to pages 271 to 273 for details.

2400 Delta Primary Volts 600Y/347 Secondary Volts 60 Hz

kVA	Catalog Number	Case Style (Pages 260 - 267)	Approx. Dimensions (Inches) Width	Depth	Height	Approx. Weight (Lbs)	Mtg Type W - Wall F - Floor	Wiring Diagram (Pages 276 - 288)
15	**MV3S015RPCF**	NH6	23.90	25.00	28.75	400	F or W *	SCD 8
30	**MV3S030RPCF**	NH6	23.90	25.00	28.75	500	F or W *	SCD 10
45	**MV3S045RPCF**	NH3	26.00	25.00	38.00	600	F or W *	SCD 10
75	**MV3S075RPCF**	NH4	32.00	29.50	41.00	900	F	SCD 10
112.5	**MV3S112RPCF**	NH4	32.00	29.50	41.00	1100	F	SCD 10
150	**MV3S150RPC**	NJ1	39.50	34.00	51.50	1500	F	SCD 10
225	**MV3S225RPC**	NJ1	39.50	34.00	51.50	1600	F	SCD 10
300	**MV3S300RPC**	NJ1	39.50	34.00	51.50	1900	F	SCD 10
500	**MV3S500RPC**	NJ2	48.50	38.40	59.00	2900	F	SCD 10
750	**MV3S750RPC**	NJ6	64.00	44.40	71.00	4200	F	SCD 10
1000	**MV3S1000RPC**	NJ6	64.00	44.40	71.00	4800	F	SCD 10
1250	**MV3S1250RPC**	NJ6	64.00	44.40	71.00	6200	F	SCD 10
1500	**MV3S1500RPC**	NJ7	64.00	51.40	75.00	6600	F	SCD 10

For shielded units, please replace the letter "C" with a "K" in the above part numbers.

*Wall mounting kit and/or drip plate kit required. Refer to pages 271 to 273 for details.

For termination details see page 275

For accessories see pages 271 to 274

© Hammond Power Solutions Inc.
Data subject to change without notice.

COPPER WOUND, THREE PHASE, NEMA 3R STYLE ENCLOSURE

4160 Delta Primary Volts 208Y/120 Secondary Volts 60 Hz

kVA	Catalog Number	Case Style (Pages 260 - 267)	Approx. Dimensions (Inches) Width	Depth	Height	Approx. Weight (Lbs)	Mtg Type W - Wall F - Floor	Wiring Diagram (Pages 276 - 288)
15	**MV3S015SBCF**	NH6	23.90	25.00	28.75	400	F or W *	SCD 8
30	**MV3S030SBCF**	NH6	23.90	25.00	28.75	500	F or W *	SCD 10
45	**MV3S045SBCF**	NH3	26.00	25.00	38.00	600	F or W *	SCD 10
75	**MV3S075SBCF**	NH4	32.00	29.50	41.00	900	F	SCD 10
112.5	**MV3S112SBCF**	NH4	32.00	29.50	41.00	1100	F	SCD 10
150	**MV3S150SBCF**	NJ1	39.50	34.00	51.50	1500	F	SCD 10
225	**MV3S225SBC**	NJ1	39.50	34.00	51.50	1700	F	SCD 10
300	**MV3S300SBC**	NJ1	39.50	34.00	51.50	1900	F	SCD 10
500	**MV3S500SBC**	NJ2	48.50	38.40	59.00	3000	F	SCD 10
750	**MV3S750SBC**	NJ6	64.00	44.40	71.00	4200	F	SCD 10
1000	**MV3S1000SBC**	NJ6	64.00	44.40	71.00	4800	F	SCD 10
1250	**MV3S1250SBC**	NJ6	64.00	44.40	71.00	6200	F	SCD 10
1500	**MV3S1500SBC**	NJ7	64.00	51.40	75.00	6600	F	SCD 10

For shielded units, please replace the letter "C" with a "K" in the above part numbers.

*Wall mounting kit and/or drip plate kit required. Refer to pages 271 to 273 for details.

4160 Delta Primary Volts 480Y/277 Secondary Volts 60 Hz

kVA	Catalog Number	Case Style (Pages 260 - 267)	Approx. Dimensions (Inches) Width	Depth	Height	Approx. Weight (Lbs)	Mtg Type W - Wall F - Floor	Wiring Diagram (Pages 276 - 288)
15	**MV3S015SKCF**	NH6	23.90	25.00	28.75	400	F or W *	SCD 8
30	**MV3S030SKCF**	NH6	23.90	25.00	28.75	500	F or W *	SCD 10
45	**MV3S045SKCF**	NH3	26.00	25.00	38.00	600	F or W *	SCD 10
75	**MV3S075SKCF**	NH4	32.00	29.50	41.00	900	F	SCD 10
112.5	**MV3S112SKCF**	NH4	32.00	29.50	41.00	1100	F	SCD 10
150	**MV3S150SKCF**	NJ1	39.50	34.00	51.50	1500	F	SCD 10
225	**MV3S225SKC**	NJ1	39.50	34.00	51.50	1600	F	SCD 10
300	**MV3S300SKC**	NJ1	39.50	34.00	51.50	1900	F	SCD 10
500	**MV3S500SKC**	NJ2	48.50	38.40	59.00	3000	F	SCD 10
750	**MV3S750SKC**	NJ6	64.00	44.40	71.00	4200	F	SCD 10
1000	**MV3S1000SKC**	NJ6	64.00	44.40	71.00	4800	F	SCD 10
1250	**MV3S1250SKC**	NJ6	64.00	44.40	71.00	6200	F	SCD 10
1500	**MV3S1500SKC**	NJ7	64.00	51.40	75.00	6600	F	SCD 10

For shielded units, please replace the letter "C" with a "K" in the above part numbers.

*Wall mounting kit and/or drip plate kit required. Refer to pages 271 to 273 for details.

4160 Delta Primary Volts 600Y/347 Secondary Volts 60 Hz

kVA	Catalog Number	Case Style (Pages 260 - 267)	Approx. Dimensions (Inches) Width	Depth	Height	Approx. Weight (Lbs)	Mtg Type W - Wall F - Floor	Wiring Diagram (Pages 276 - 288)
15	**MV3S015SPCF**	NH6	23.90	25.00	28.75	400	F or W *	SCD 8
30	**MV3S030SPCF**	NH6	23.90	25.00	28.75	500	F or W *	SCD 10
45	**MV3S045SPCF**	NH3	26.00	25.00	38.00	600	F or W *	SCD 10
75	**MV3S075SPCF**	NH4	32.00	29.50	41.00	900	F	SCD 10
112.5	**MV3S112SPCF**	NH4	32.00	29.50	41.00	1100	F	SCD 10
150	**MV3S150SPCF**	NJ1	39.50	34.00	51.50	1500	F	SCD 10
225	**MV3S225SPC**	NJ1	39.50	34.00	51.50	1600	F	SCD 10
300	**MV3S300SPC**	NJ1	39.50	34.00	51.50	1900	F	SCD 10
500	**MV3S500SPC**	NJ2	48.50	38.40	59.00	2900	F	SCD 10
750	**MV3S750SPC**	NJ6	64.00	44.40	71.00	4200	F	SCD 10
1000	**MV3S1000SPC**	NJ6	64.00	44.40	71.00	4800	F	SCD 10
1250	**MV3S1250SPC**	NJ6	64.00	44.40	71.00	6200	F	SCD 10
1500	**MV3S1500SPC**	NJ7	64.00	51.40	75.00	6600	F	SCD 10

For shielded units, please replace the letter "C" with a "K" in the above part numbers.

*Wall mounting kit and/or drip plate kit required. Refer to pages 271 to 273 for details.

For termination details see page 275

For accessories see pages 271 to 274

© Hammond Power Solutions Inc.

Data subject to change without notice.

GENERAL INFORMATION

Enclosure Drawings, Connection Diagrams, Termination Details, Alpha-Numeric Part Number Index

Enclosure Dimensional Drawings 260

Conduit Size vs. Knockout Size Reference Table 264

Accessories - for General Purpose Transformers 271

Termination Details 275

Electrical Connection Diagrams 276

Alpha-Numeric Part Number Index 291

HPS Transformer Literature Request Form 316

NEMA 3R ENCLOSURE DIMENSIONAL DRAWINGS

'NH' SERIES ENCLOSURES

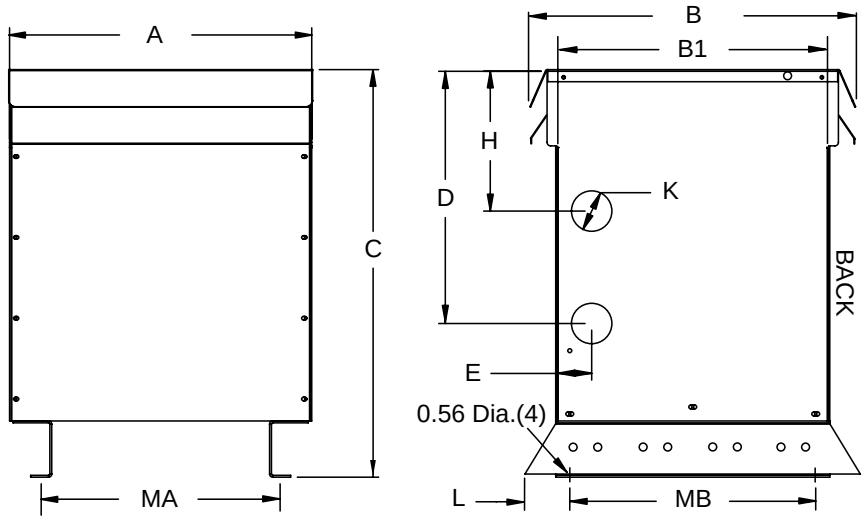

FRONT VIEW

All Dimensions in Inches

SIDE VIEW

Case Style	Dimensions in Inches										
	A	B	B[1]	C	D	E	H	K[1]	L	MA	MB
NH3	26.00	25.00	24.00	38.00	24.00	2.50	14.00	2.00 X 3.00	2.50	21.50	19.00
NH4	32.00	29.50	28.50	41.00	24.00	2.50	12.00	2.00 X 3.00	2.50	23.50	23.50

Note: Mounting hole dimension is 0.56" diameter.

[1] Knockout (K) sizes are actual diameters of knockout, not conduit sizes. Refer to table on page 264 for conduit sizes.

Optional NEMA 4, 12 and Stainless Steel Enclosures are available. See page 266 & 267 for details.

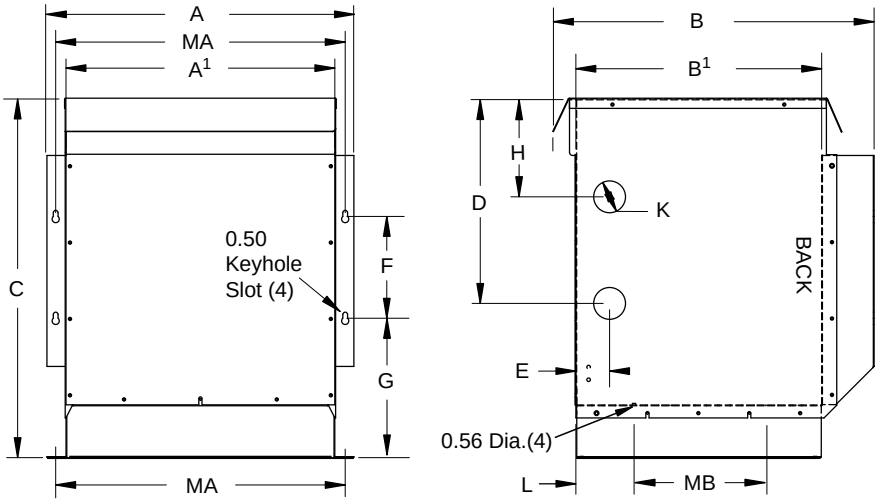

FRONT VIEW

All Dimensions in Inches

SIDE VIEW

Case Style	Dimensions in Inches													
	A	A[1]	B	B[1]	C	D	E	F	G	H	K[1]	L	MA	MB
NH5	19.40	16.75	20.20	15.00	21.50	12.00	2.00	7.00	7.81	6.00	1.38 X 1.75	2.80	18.00	9.00
NH6	23.90	21.50	25.00	19.50	28.75	17.00	2.00	8.00	10.29	8.50	1.75 X 2.50	5.20	22.75	9.00

Note: Mounting hole dimension is 0.56" diameter.

[1] Knockout (K) sizes are actual diameters of knockout, not conduit sizes. Refer to table on page 264 for conduit sizes.

Optional NEMA 4, 12 and Stainless Steel Enclosures are available. See page 266 & 267 for details.

© Hammond Power Solutions Inc.

Data subject to change without notice.

NEMA 3R ENCLOSURE DIMENSIONAL DRAWINGS

'NJ' SERIES ENCLOSURES

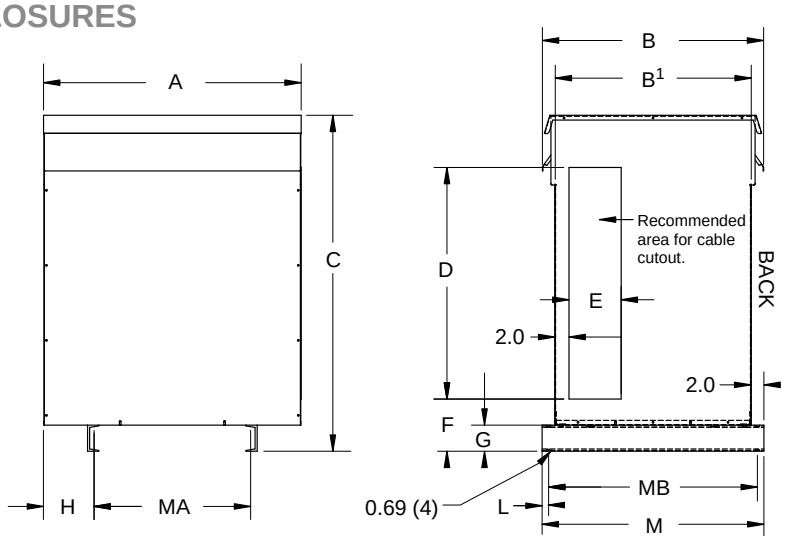

FRONT VIEW

All Dimensions in Inches

SIDE VIEW

Case Style	Dimensions in Inches												
	A	B	B1	C	D	E	F	G	H	L	M	MA	MB
NJ1	39.50	34.00	30.00	51.50	35.50	6.00	8.00	4.00	7.75	1.00	34.00	24.00	32.00
NJ2	48.50	38.40	34.00	59.00	40.00	8.00	8.00	4.00	10.50	1.00	38.00	27.50	36.00
NJ4	32.00	32.50	28.50	50.00	34.00	8.00	8.00	4.00	5.00	1.00	32.50	22.00	30.50

Note: Mounting hole dimension is 0.69" diameter.

Optional NEMA 4, 12 and Stainless Steel Enclosures are available. See page 266 & 267 for details.

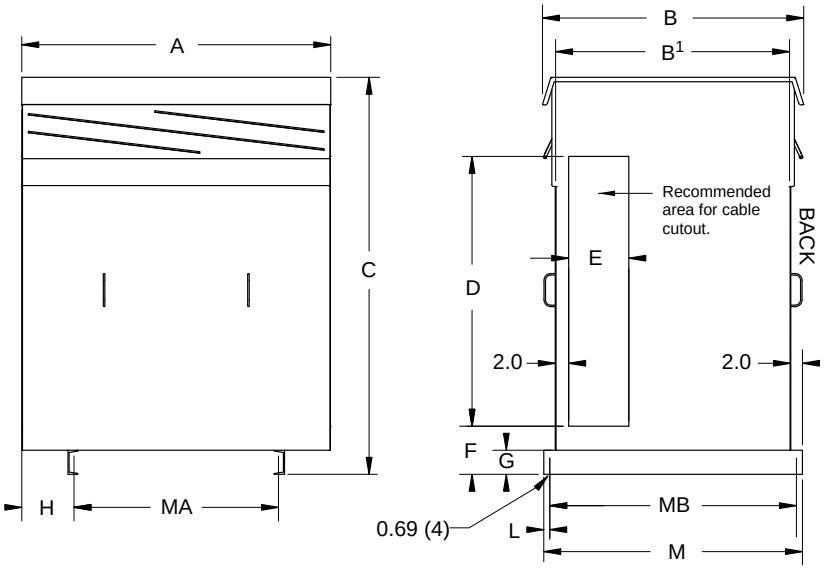

FRONT VIEW

All Dimensions in Inches

SIDE VIEW

Case Style	Dimensions in Inches												
	A	B	B1	C	D	E	F	G	H	L	M	MA	MB
NJ3	51.50	43.40	39.00	66.00	47.00	10.00	8.00	4.00	8.75	1.00	43.00	34.00	41.00
NJ6	64.00	44.40	40.00	71.00	50.00	11.50	9.00	5.00	12.00	1.00	44.00	40.00	42.00
NJ7	64.00	51.40	47.00	75.00	54.00	11.50	9.00	5.00	12.00	1.00	51.00	40.00	49.00

Note: Mounting hole dimension is 0.69" diameter.

Optional NEMA 4, 12 and Stainless Steel Enclosures are available. See page 266 & 267 for details.

© Hammond Power Solutions Inc.

Data subject to change without notice.

NEMA 3R ENCLOSURE DIMENSIONAL DRAWINGS

'NQ' SERIES ENCLOSURES

Figure 1

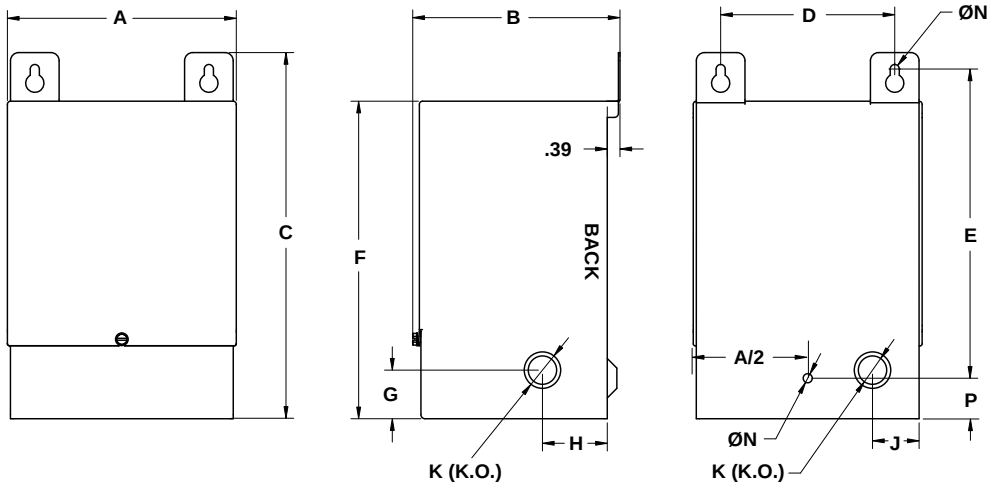

FRONT VIEW SIDE VIEW BACK VIEW

Case Style	Fig #	Dimensions in Inches														
		A	B	C	D	E	F	G	H	J	K[1]	L	M	N	P	R
NQ0	1	3.75	5.25	7.25	2.50	5.63	6.25	1.50	2.00	--	0.88	--	--	0.22	1.25	--
NQ1	1	4.50	5.75	7.25	3.13	5.63	6.25	1.50	2.00	0.81	0.88	--	--	0.22	1.25	--
NQ2	1	5.00	4.75	9.25	3.88	7.75	8.25	1.50	2.00	1.00	0.88 X 1.13 X 1.38	--	--	0.22	1.25	--
NQ3	1	5.88	5.50	10.50	4.13	8.25	9.00	1.50	2.00	1.25	0.88 X 1.13 X 1.38	--	--	0.28	1.25	--
NQ4	1	7.00	6.50	11.75	5.38	9.50	10.25	1.75	2.00	1.50	0.88 X 1.13 X 1.38	--	--	0.28	1.25	--
NQ5	2	10.00	7.75	17.25	7.38	15.38	15.25	2.375	2.00	4.00	1.13 X 1.38	6.00	0.75	0.44	1.25	1.68
NQ6A	2	12.25	9.25	17.63	9.38	14.88	15.56	2.00	2.00	5.00	1.38 X 2.50	8.00	0.75	0.44	2.00	1.68
NQ6	2	12.25	9.25	20.88	9.38	18.13	18.88	2.00	2.00	5.00	1.38 X 2.50	8.00	0.75	0.44	2.00	1.68
NQ7	2	14.50	10.75	21.38	11.63	18.63	19.38	2.00	2.00	6.00	1.38 X 2.50	10.00	0.75	0.44	2.00	1.81
NQ8	2	14.50	10.75	27.38	11.13	24.50	24.88	2.00	2.00	6.00	1.38 X 2.50	10.00	0.75	0.56	2.00	1.81

[1] Knockout (K) sizes are actual diameters of knockout, not conduit sizes.
Refer to table on page 264 for conduit sizes.

OPTIONAL STAINLESS STEEL ENCLOSURES ARE AVAILABLE.

Figure 2

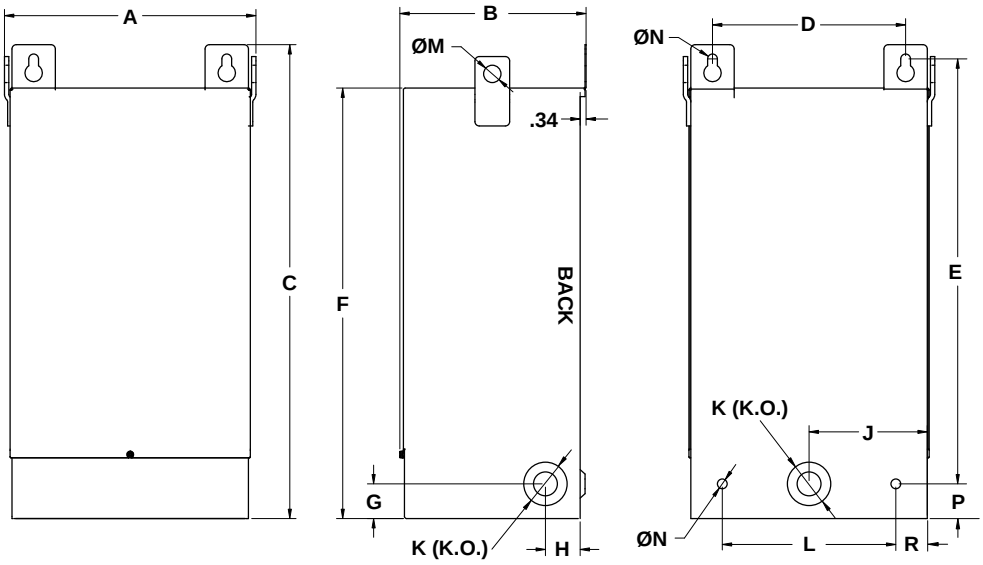

FRONT VIEW SIDE VIEW BACK VIEW

© Hammond Power Solutions Inc.
Data subject to change without notice.

NEMA 3R ENCLOSURE DIMENSIONAL DRAWINGS

'NQT & NQS' SERIES ENCLOSURES

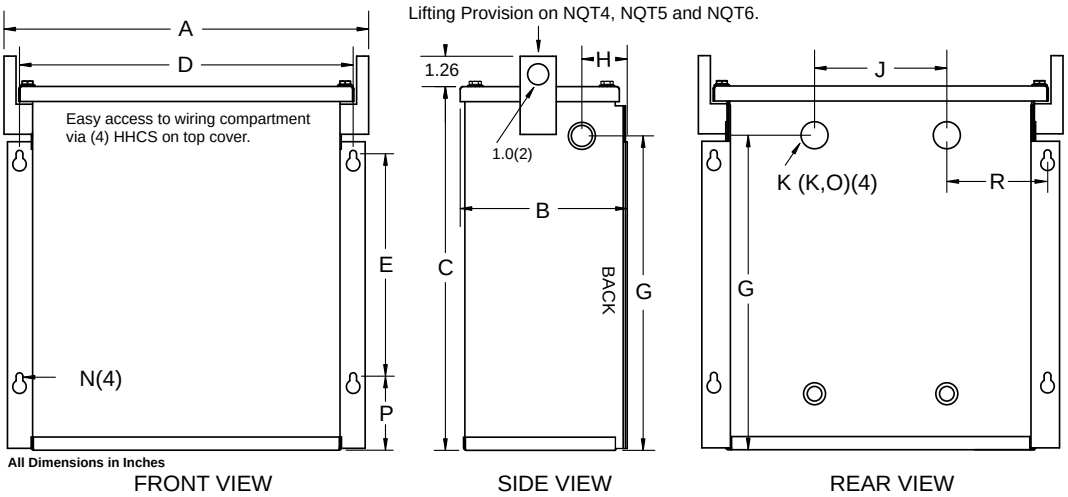

Figure 1

Case Style	Fig #	Dimensions in Inches														
		A	B	C	D	E	F	G	H	J	K[1]	L	M	N	P	R
NQT2	1	9.38	4.94	8.63	8.38	4.00	-	7.06	2.38	4.50	0.88 X 1.13	-	-	0.28	1.81	2.44
NQT3	1	12.38	5.44	11.13	11.38	6.50	-	9.50	2.38	5.50	0.88 X 1.13	-	-	0.28	1.81	3.44
NQT4	1	15.19	6.94	15.13	13.88	9.25	-	13.56	1.88	5.50	0.88 X 1.13	-	-	0.28	3.06	4.19
NQT5	1	16.63	10.25	16.63	14.50	8.25	-	13.88	2.69	10.00	1.38 X 1.75	-	-	0.41	4.50	2.25
NQT6	1	19.25	10.44	16.63	17.50	8.25	-	13.56	2.69	12.50	1.38 X 2.50	-	-	0.41	4.50	2.50
NQT7	2	20.25	13.00	23.38	12.00	11.75	11.38	17.94	2.50	13.75	1.38 X 2.50	4.25	17.94	0.56	-	2.13
NQT8	2	22.25	13.00	28.38	14.00	11.75	11.38	21.94	2.50	15.75	1.38 X 2.50	4.25	21.94	0.56	-	2.13
NQT9	2	31.25	16.00	29.88	18.00	14.75	14.13	23.94	2.75	22.75	2.00 X 3.00	6.50	23.94	0.56	-	3.13
NQT9A	2	34.63	18.50	36.75	22.50	17.25	16.50	30.38	4.69	27.25	2.00 X 3.00	6.50	30.38	0.56	-	3.31
NQS10	2	21.88	18.50	31.00	13.50	17.25	16.50	24.63	4.91	13.13	1.75 X 2.50	6.50	24.63	0.56	-	4.00
NQT10	3	38.44	26.00	39.13	23.50	24.00	20.80	32.50	6.40	24.75	2.50 X 3.63	8.00	32.50	0.69	-	6.84
NQT11	3	37.38	30.00	45.63	23.50	28.00	22.00	39.00	6.95	24.75	2.50 X 3.63	8.00	39.00	0.69	-	6.31

[1] Knockout (K) sizes are actual diameters of knockout, not conduit sizes.
Refer to table on page 264 for conduit sizes.

OPTIONAL STAINLESS STEEL ENCLOSURES ARE AVAILABLE.

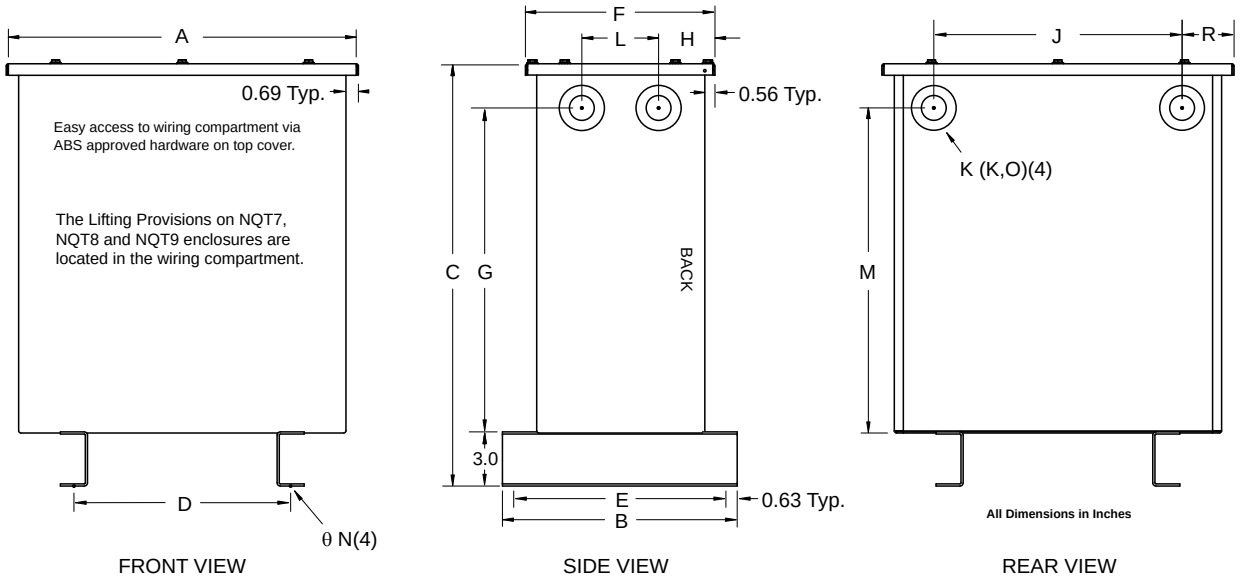

Figure 2

© Hammond Power Solutions Inc.
Data subject to change without notice.

NEMA 3R ENCLOSURE DIMENSIONAL DRAWINGS CONTINUED

'NQT & NQS' SERIES ENCLOSURES

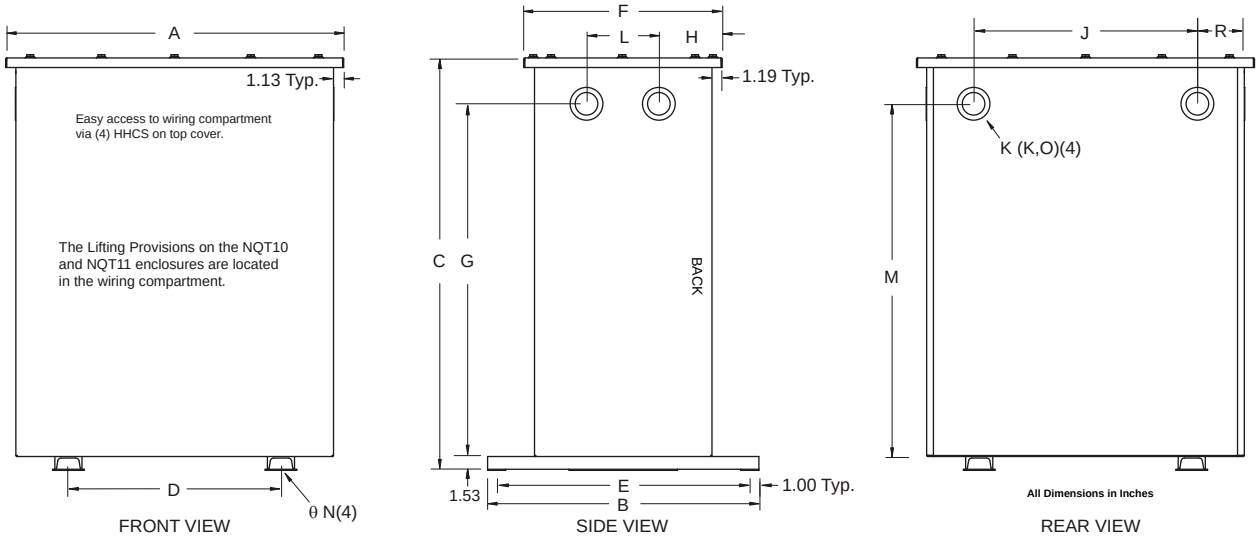

Figure 3

NEMA 2 ENCLOSURE DIMENSIONAL DRAWINGS

'N1' SERIES ENCLOSURE

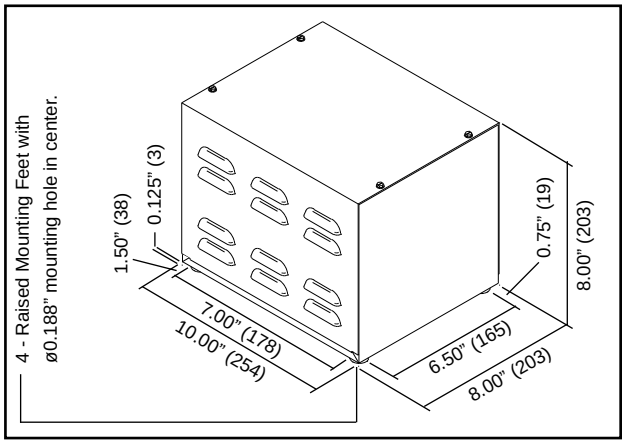

'N2' SERIES ENCLOSURE

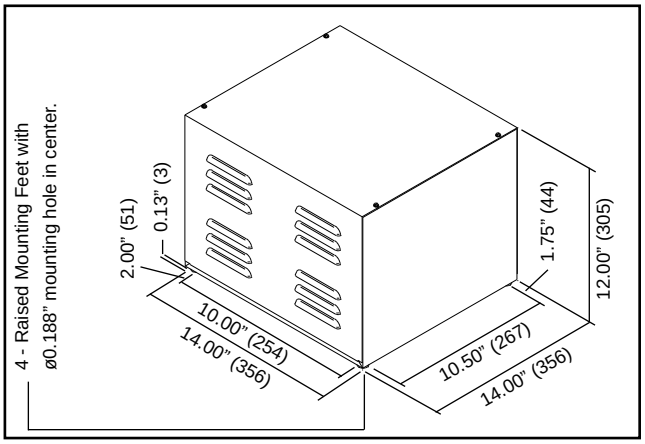

Conduit Size vs. Actual Knockout Size Reference Table

Standard Conduit Size	Actual Kockout Diameter
1/2"	7/8"
3/4"	1 1/8"
1"	1 3/8"
1 1/4"	1 3/4"
1 1/2"	2"
2"	2 1/2"
2 1/2"	3"
3"	3 5/8"
3 1/2"	4 1/8"

© Hammond Power Solutions Inc.
Data subject to change without notice.

TYPE 3RE ENHANCED ENCLOSURE DIMENSIONAL DRAWINGS

'NH' SERIES ENCLOSURES

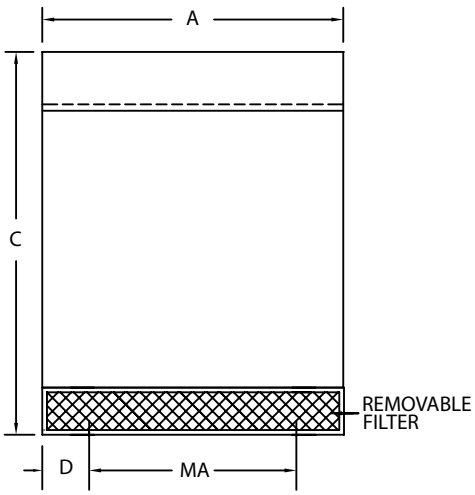

FRONT VIEW

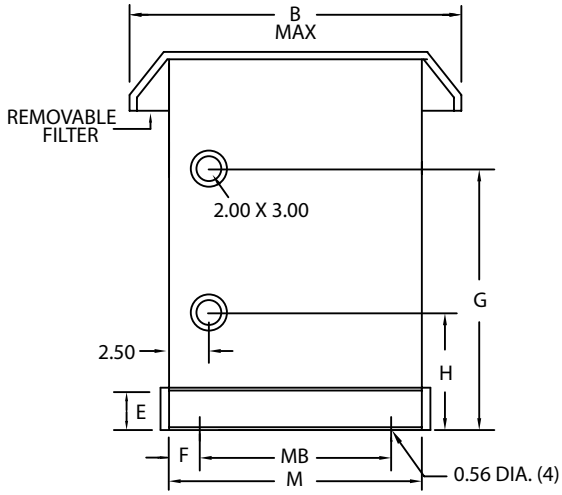

SIDE VIEW

All Dimensions in Inches

Case Style	Dimensions in Inches										
	A	B	C	D	E	F	G	H	MA	MB	M
NH3-N3RE	26.00	38.00	42.00	2.25	8.00	0.75	26.00	18.00	21.50	19.00	20.63
NH4-N3RE	32.00	42.00	45.00	4.25	8.00	0.75	29.00	18.00	23.50	23.50	25.13

'NJ' SERIES ENCLOSURES

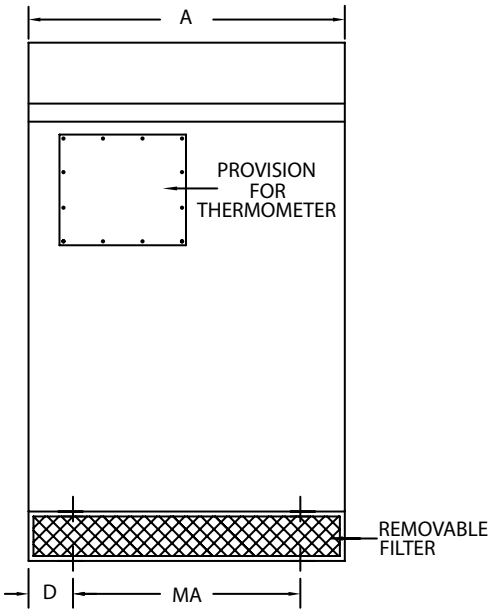

FRONT VIEW

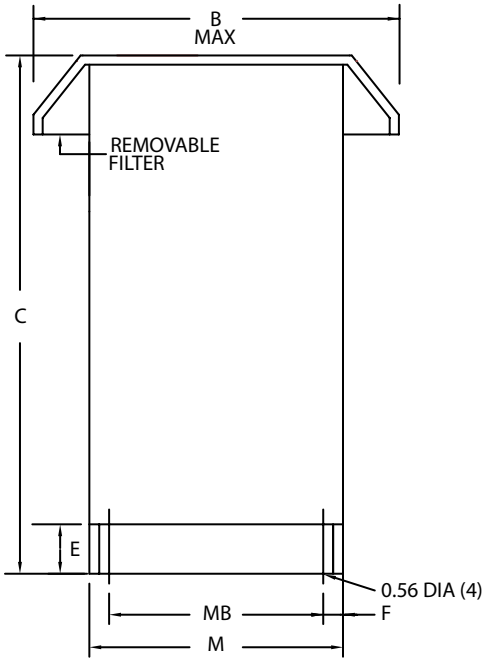

SIDE VIEW

All Dimensions in Inches

Case Style	Dimensions in Inches								
	A	B	C	D	E	F	MA	MB	M
NJ1-N3RE	39.50	55.00	57.50	7.63	10.00	1.00	24.00	32.00	34.00
NJ2-N3RE	48.50	60.00	65.00	10.38	10.00	1.00	27.50	36.00	38.00
NJ3-N3RE	51.50	65.00	72.00	8.52	10.00	1.00	34.00	41.00	43.00
NJ4-N3RE	32.00	54.00	56.00	4.88	10.00	1.00	22.00	30.50	32.50
NJ6-N3RE	64.00	70.00	83.00	12.00	12.00	1.00	40.00	42.00	44.00
NJ7-N3RE	64.00	77.00	83.00	12.00	12.00	1.00	40.00	49.00	51.00

© Hammond Power Solutions Inc.
Data subject to change without notice.

OPTIONAL NEMA 4 & 12 ENCLOSURE DIMENSIONAL DRAWINGS

‘NH-N4 & NH-N12’ SERIES ENCLOSURES

All Dimensions in Inches

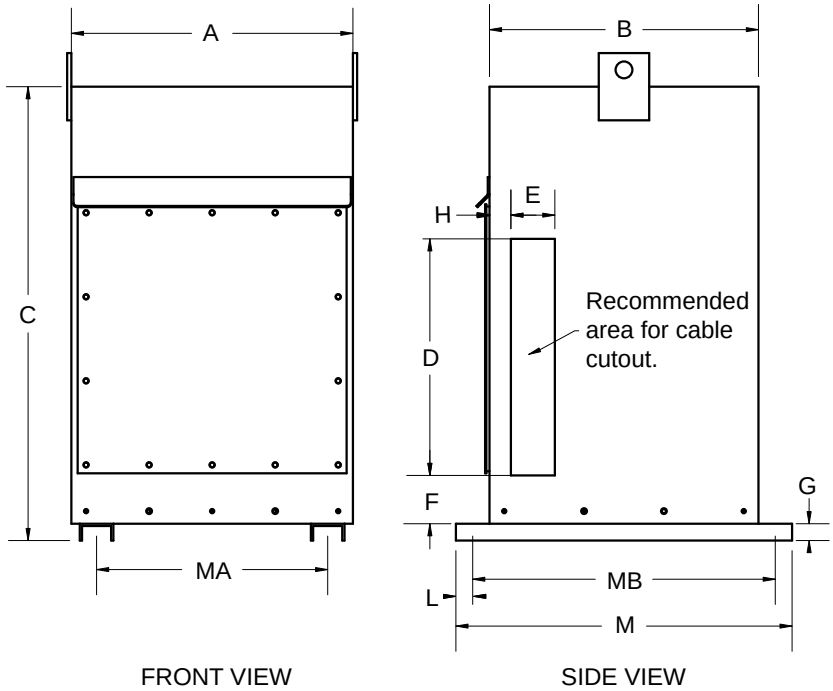

Case Style	Dimensions in Inches											
	A	B	C	D	E	F	G	H	L	M	MA	MB
NH5-N4, NH5-N12	16.75	16.00	27.00	16.00	4.00	4.00	1.00	2.00	1.00	20.00	13.75	18.00
NH6-N4, NH6-N12	21.50	21.00	41.00	24.00	5.00	4.00	1.00	2.00	1.00	25.00	17.00	23.00
NH3-N4, NH3-N12	28.00	23.00	55.50	32.00	6.00	4.00	1.50	2.00	1.00	27.00	21.50	25.00
NH4-N4, NH4-N12	34.00	27.00	61.50	36.00	7.00	4.00	1.50	2.00	1.00	31.00	23.50	29.00

Note: Mounting hole dimension is 0.69” diameter.

Optional NEMA 4 & 12 Stainless Steel Enclosures

Optional NEMA 4 and 12 rated stainless steel enclosures are available and are designed using either type 304 or 316 stainless steel in accordance with ANSI, NEMA, UL and ABS requirements for indoor, outdoor and marine duty applications.

© Hammond Power Solutions Inc.
Data subject to change without notice.

OPTIONAL NEMA 4 & 12 ENCLOSURE DIMENSIONAL DRAWINGS

'NJ-N4 & NJ-N12' SERIES ENCLOSURES

All Dimensions in Inches

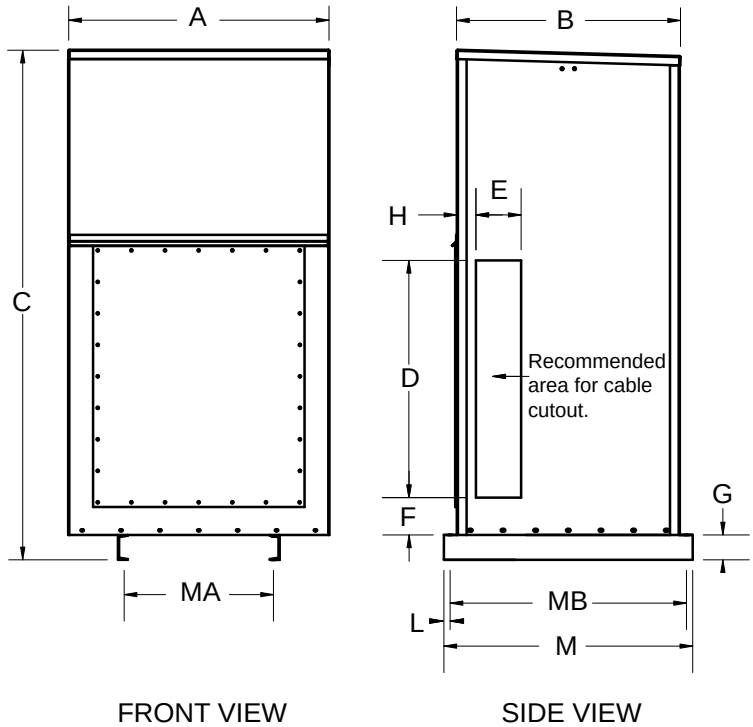

Case Style	Dimensions in Inches											
	A	B	C	D	E	F	G	H	L	M	MA	MB
NJ1-N4, NJ1-N12	42.00	36.00	82.00	40.00	8.00	6.00	4.00	3.00	1.00	40.00	24.00	38.00

Note: Mounting hole dimension is 0.69" diameter.

Optional NEMA 4 & 12 Stainless Steel Enclosures

Optional NEMA 4 and 12 rated stainless steel enclosures are available and are designed using either type 304 or 316 stainless steel in accordance with ANSI, NEMA, UL and ABS requirements for indoor, outdoor and marine duty applications.

© Hammond Power Solutions Inc.
Data subject to change without notice.

NEMA 3R ENCLOSURE DIMENSIONAL DRAWINGS

'PPE1 - PPE5' SERIES ENCLOSURES

PPE1

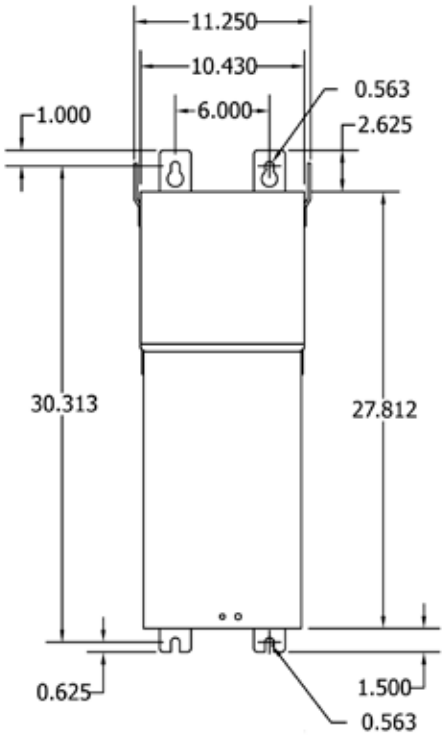

FRONT VIEW

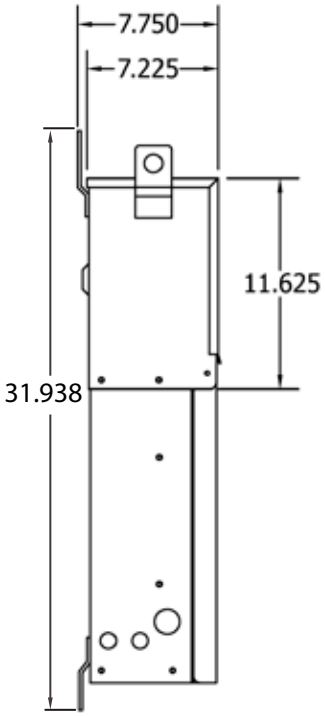

SIDE VIEW

PPE2

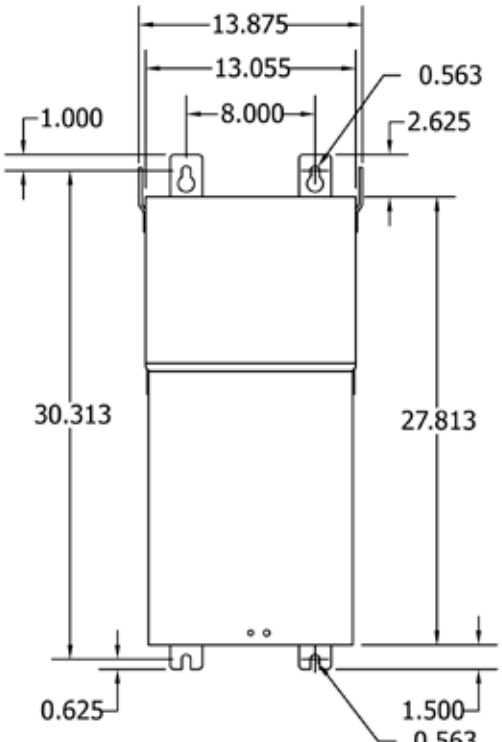

FRONT VIEW

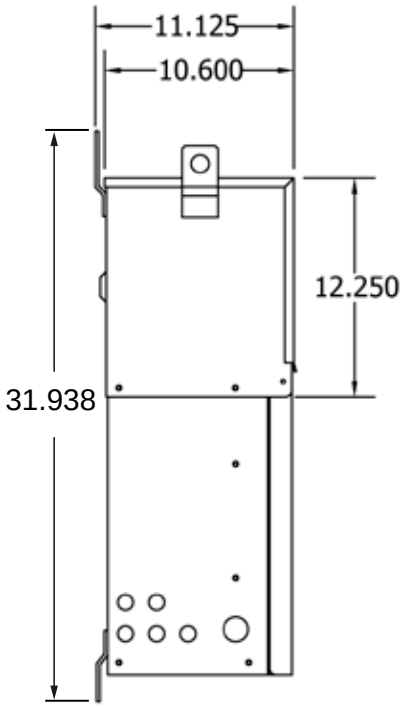

SIDE VIEW

© Hammond Power Solutions Inc.

Data subject to change without notice.

NEMA 3R ENCLOSURE DIMENSIONAL DRAWINGS

'PPE1 - PPE5' SERIES ENCLOSURES CONTINUED

PPE3

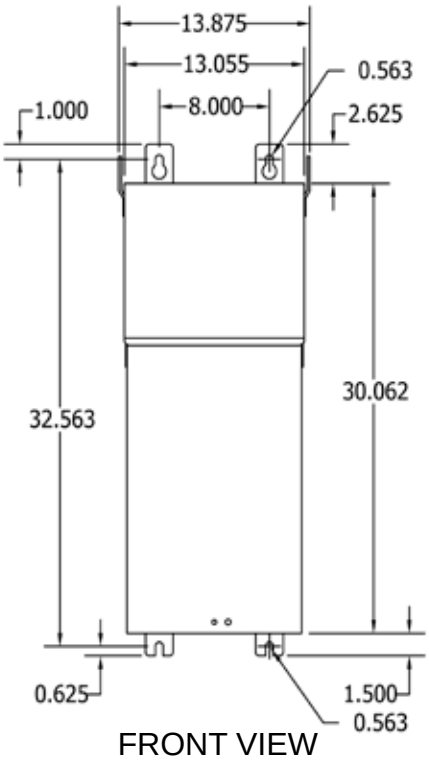

FRONT VIEW

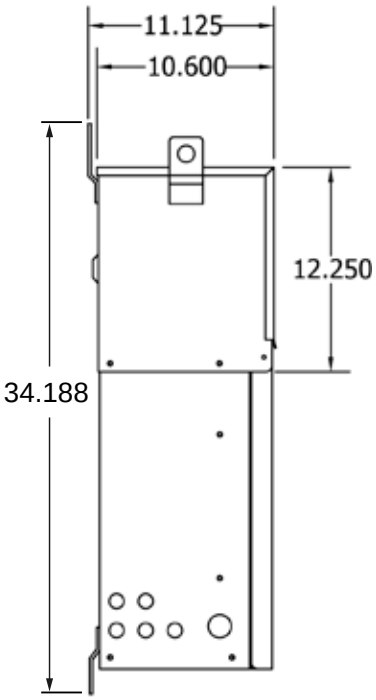

SIDE VIEW

PPE4

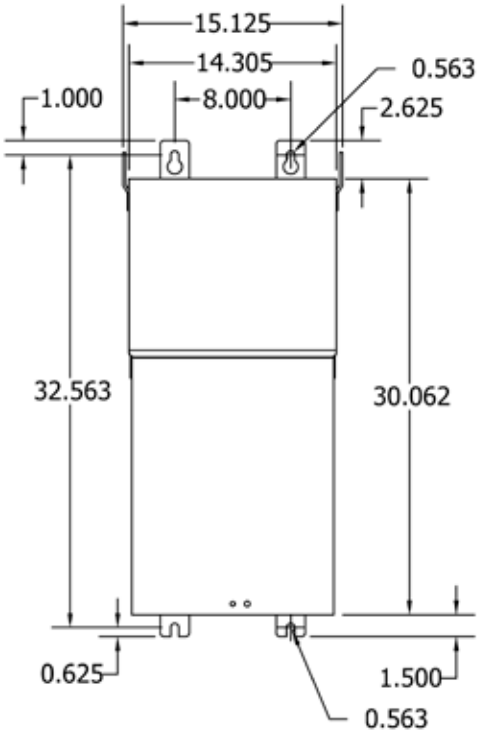

FRONT VIEW

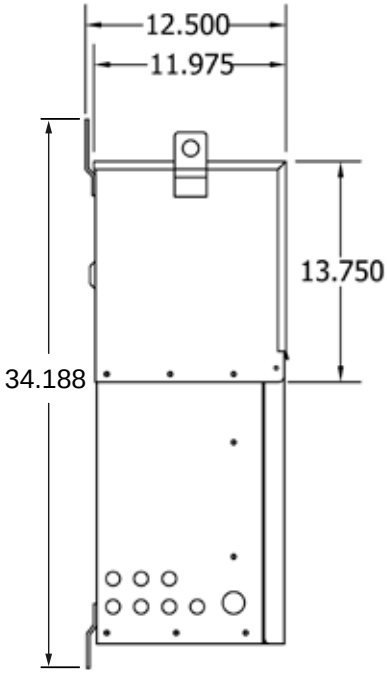

SIDE VIEW

© Hammond Power Solutions Inc.

Data subject to change without notice.

NEMA 3R ENCLOSURE DIMENSIONAL DRAWINGS

'PPE1 - PPE5' SERIES ENCLOSURES CONTINUED

PPE5

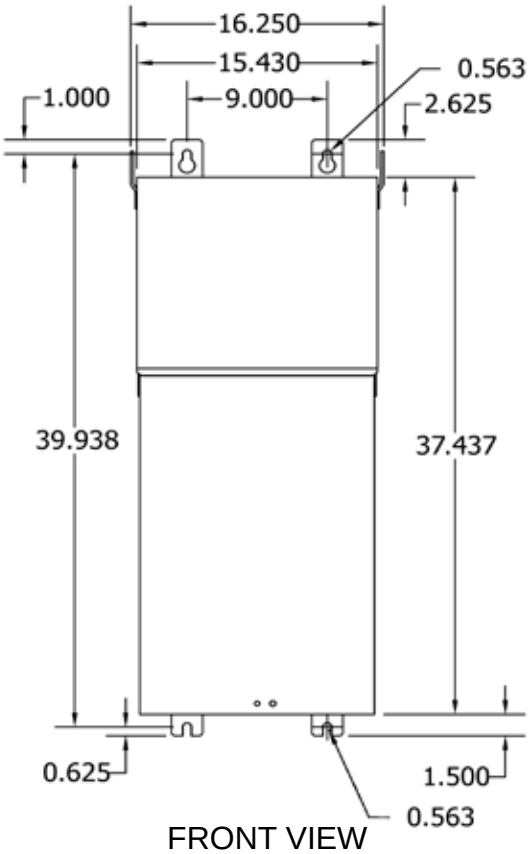

FRONT VIEW

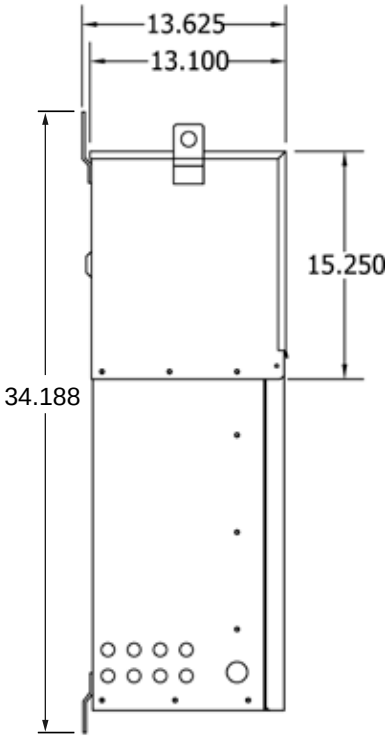

SIDE VIEW

© Hammond Power Solutions Inc.

Data subject to change without notice.

ACCESSORIES (for transformers listed in sections 3, 4, 7, 10 and 11)

ENCLOSURE MOUNTING KITS

If wall and/or ceiling mounting is desired for a transformer, optional mounting kits can be ordered separately. These mounting kits are NOT available for all enclosure case styles. Therefore, it is important that you confirm your enclosure case style, then use the selection table to the right to determine if A) a mounting kit is available and B) determine the correct HPS "Mounting Kit" part number that you must order. One kit is required for each transformer.

Enclosure Case Style	Wall Mount Available	Ceiling Mount Available	HPS Mounting Kit P/N
N1	No	No	N/A
N2	No	No	N/A
NH3	Yes	Yes	NW2
NH4	No	No	N/A
NH5	Yes	Yes	NH5DP
NH6	Yes	Yes	NH6DP
NJ Series	No	No	N/A

Note: Some of the mounting kits can be used for both wall and ceiling mount, while others are for wall mounting only. The table indicates which mounting methods are available for each kit. The NW2 wall/ceiling mounting kit also includes a drip plate.

The NW2 wall/ceiling mounting kit is only designed for units up to 750 pounds (341 kg) maximum.

NW2 WALL/CEILING MOUNTING KITS

The following drawings detail the wall and ceiling mounting dimensions required and method by which the NW2 kits are installed on the NH3 enclosures.

NW2 WALL MOUNT - MOUNTING DIMENSIONS

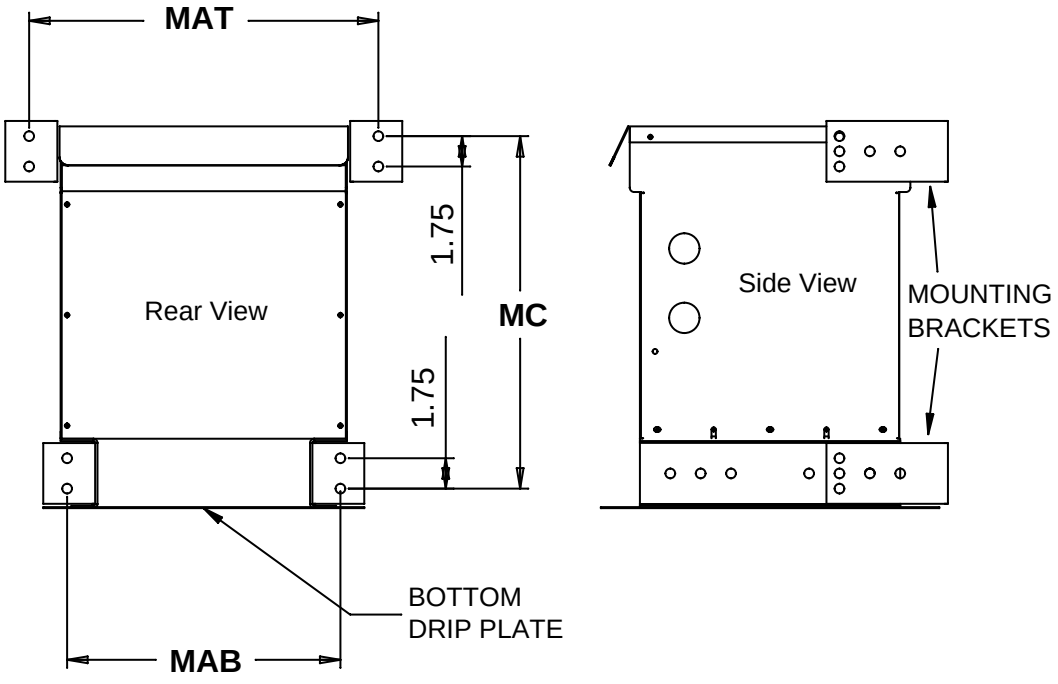

Wall Mounting Dimensions				
Part No.	Enclosure	MAT	MAB	MC
NW2	NH3	29.375	23.50	36.50

NOTE: Please refer to enclosure dimensional drawings on page 260 for more detailed dimensional information.

© Hammond Power Solutions Inc.
Data subject to change without notice.

ACCESSORIES (for transformers listed in sections 3, 4, 7, 10 and 11)

NW2 CEILING MOUNT - MOUNTING DIMENSIONS

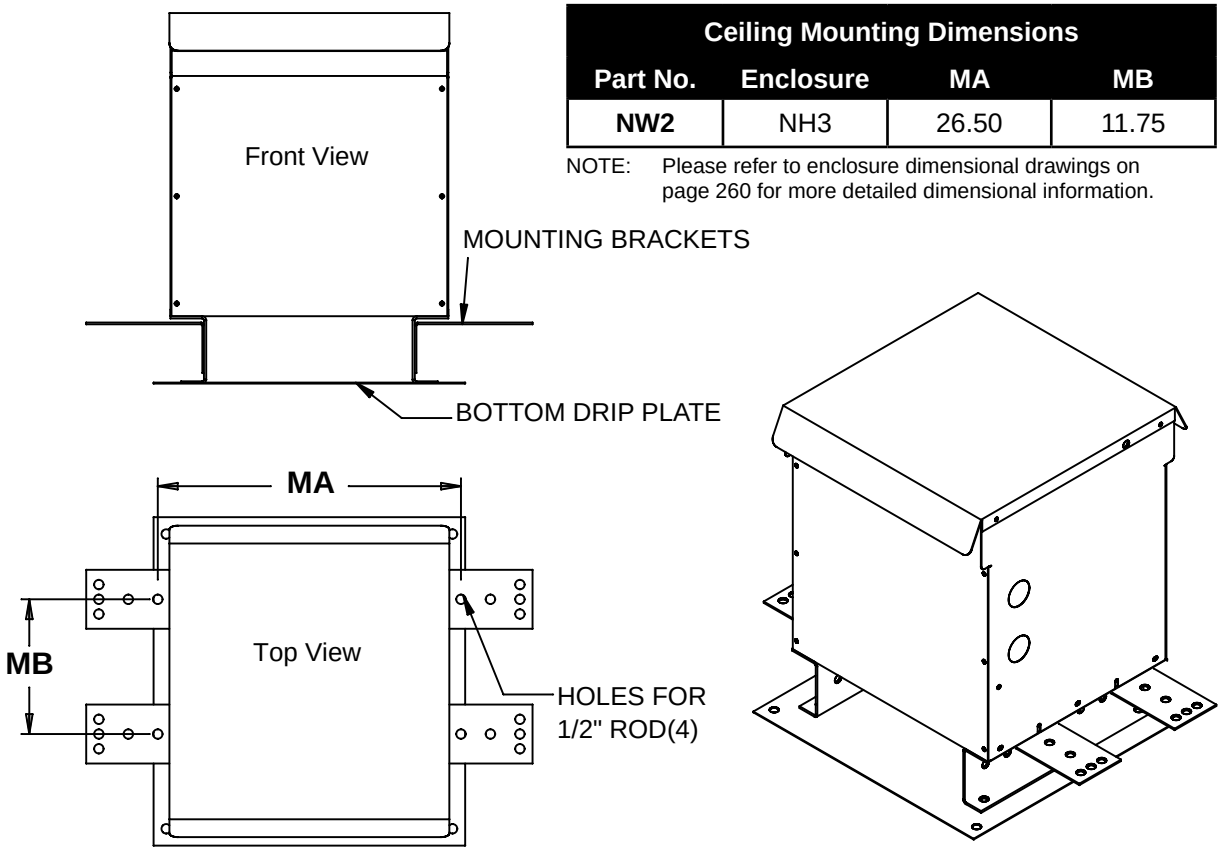

Ceiling Mounting Dimensions			
Part No.	**Enclosure**	**MA**	**MB**
NW2	NH3	26.50	11.75

NOTE: Please refer to enclosure dimensional drawings on page 260 for more detailed dimensional information.

NH5DP & NH6DP WALL/CEILING MOUNTING KITS

The NH5 and NH6 enclosures are designed with integral wall mounting capabilities. However, when you wall mount them, you must also install the bottom drip plate as shown below. The “MB” dimensions listed in the table below indicate the location for the wall mounting hardware.

For ceiling mounting of the NH5 and NH6, refer to the “MA” dimensions listed in the table below and hang the enclosure using appropriate sized ceiling hanger rods. However, you must be sure to install the bottom drip plate to the bottom of the enclosure, then bring the hanger rod down through both the enclosure bottom mounting holes and through the drip plate mounting holes and install mounting hardware.

NOTE: Do not ceiling mount either the NH5 or NH6 enclosures without installing the bottom drip plate. All mounting hardware should be rated Grade 8 or higher.

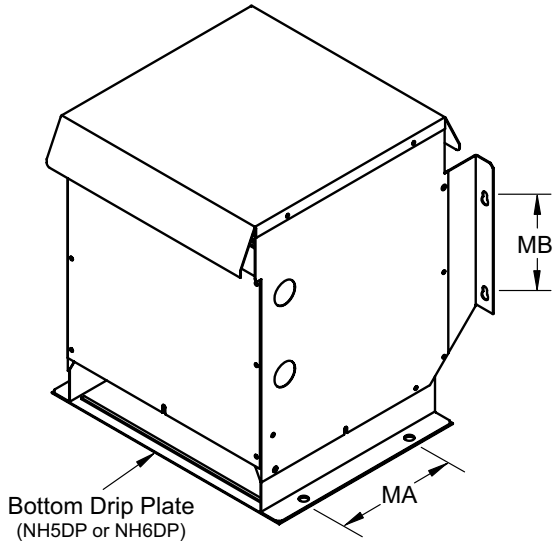

Mounting Kit P/N	Enclosure Style	MA Dimension	MB Dimension
NH5DP	NH5	9.00	7.00
NH6DP	NH6	9.00	8.00

NOTE: Please refer to enclosure dimensional drawings on page 260 for more detailed dimensional information.

© Hammond Power Solutions Inc.
Data subject to change without notice.

ACCESSORIES (for transformers listed in sections 3, 4, 7, 10 and 11)

ANTI-VIBRATION PAD AND VIBRATION ISOLATOR KITS

All standard transformers come with installed internal vibration absorbing pads to minimize noise during operation. Optional external “anti-vibration” pad and “vibration isolator” (for higher noise dampening) kits can be used to reduce operating noise even further. All are resistant to industrial contaminants like oils, acids and alkalies.

ANTI-VIBRATION PAD KITS

Part No.	Case Style	Description
P1	NH Series	Set of four (4) rubber anti-vibration pads which replace the standard steel enclosure washers.
P2	NJ Series	

All Anti-Vibration Pad kits and Vibration Isolator kits contain a set of four (4) pads or isolators. Therefore only one kit is required per transformer.

VIBRATION ISOLATOR KITS

Part No.	Transformer Weight (Lb)	Description
NMP1	Up to 340 lbs	Set of four (4) molded neoprene and steel plate assemblies that virtually eliminate vibration noise between the transformer and the mounting surface.
NMP2	341 to 680 lbs	
NMP3	681 to 1040 lbs	
NMP4	1041 to 1740 lbs	
NMP5	1741 to 2330 lbs	
NMP6	2331 to 3450 lbs	
NMP7	3451 to 4690 lbs	

ACCESSORIES (for transformers listed in sections 8 and 10)

NQTW1 and NQTW2 Wall Mounting Kits

The **NQTW1 and NQTW2** wall mounting kits are specifically designed for HPS commercial or industrial encapsulated (potted) distribution transformer units up to a maximum of 45kVA or 800 pounds (363 kg). These mounting kits are designed for encapsulated (potted) units only, no drip plate is included/required. Please contact HPS customer service if you have any questions.

Note: Always measure and secure mounting brackets to the wall surface first, then lift the transformer (using appropriate lifting equipment) onto the brackets and attach using minimum Grade 8 hardware.

Enclosure Case Style	Mounting Type	Wall Mounting Kit Part Number
NQ0-NQ8	Wall	**Included**
NQS10	Wall or Floor	**NQTW2**
NQT3-NQT6	Wall	**Included**
NQT7-NQT8	Wall or Floor	**NQTW1**
NQT9A	Floor	**N/A**
NQT9*	Wall or Floor	**NQTW2**

*Applies to HPS Fortress line only.

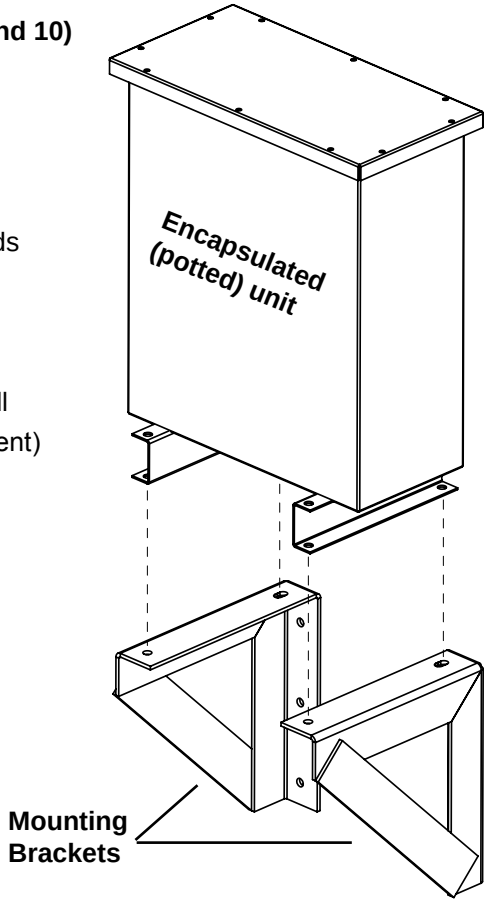

© Hammond Power Solutions Inc.
Data subject to change without notice.

ACCESSORIES (for transformers listed in sections 8 and 10)

NQT ENCLOSURE SERIES NEMA 4/12 GASKET KITS

The following options and accessories offered are available on all standard and custom three phase HPS Titan® industrial encapsulated distribution transformers for harsh environments and hazardous locations (see section 8), HPS Fortress™ commercial encapsulated distribution transformers (see section 8) and encapsulated autotransformers (see section 10).

Optional NEMA 4/12 Gasket Kits

Standard NEMA 3R rated NQT enclosures can easily be converted to a NEMA 4 or 12 rating by ordering and installing the appropriate gasket kit as listed in the table below.

Enclosure Style	Gasket Kit P/N	Enclosure Style	Gasket Kit P/N
NQT2	**NQT2GK**	NQT8	**NQT8GK**
NQT3	**NQT3GK**	NQT9	**NQT9GK**
NQT4	**NQT4GK**	NQT9A	**NQT9AGK**
NQT5	**NQT5GK**	NQT10	**NQT10GK**
NQT6	**NQT6GK**	NQT11	**NQT11GK**
NQT7	**NQT7GK**		

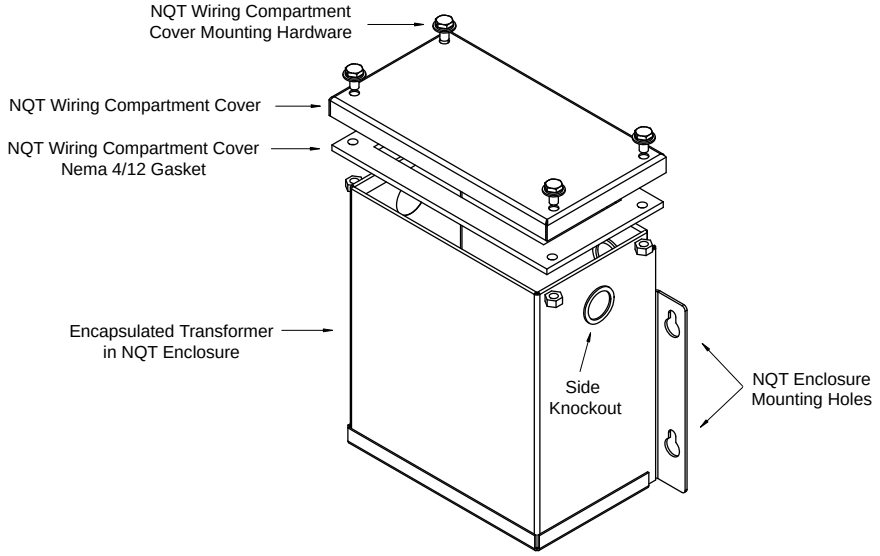

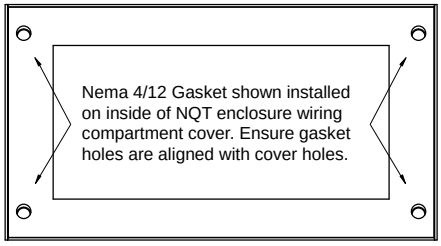

Optional Stainless Steel Enclosures

Optional NEMA 4 and 12 rated stainless steel enclosures for encapsulated transformers are identical to the standard steel enclosure designs but are designed using either type 304 or 316 stainless steel in accordance with ANSI, NEMA, UL and ABS requirements for indoor, outdoor and marine duty applications.

© Hammond Power Solutions Inc.
Data subject to change without notice.

TERMINATION DETAILS - NEMA 3R

The following termination details are for standard 150°C temperature rise HPS Sentinel (section 7), HPS SuperSentinel (section 7) and general purpose medium voltage transformer (section 11) units only.

SINGLE PHASE, ALUMINUM AND COPPER TERMINATION - LUGS OR PADS

kVA	VOLTAGE											
	120	120/240	208	240	277	347	380	416	480	600	2400	4160
0.25	Leads	Leads	Leads	Leads	Leads	Leads	Leads	Leads	Leads	Leads	-	-
0.5	Leads	Leads	Leads	Leads	Leads	Leads	Leads	Leads	Leads	Leads	-	-
0.75	Leads	Leads	Leads	Leads	Leads	Leads	Leads	Leads	Leads	Leads	-	-
1	Leads	Leads	Leads	Leads	Leads	Leads	Leads	Leads	Leads	Leads	-	-
1.5	Leads	Leads	Leads	Leads	Leads	Leads	Leads	Leads	Leads	Leads	-	-
2	Leads	Leads	Leads	Leads	Leads	Leads	Leads	Leads	Leads	Leads	-	-
3	Leads	Leads	Leads	Leads	Leads	Leads	Leads	Leads	Leads	Leads	-	-
5	Leads	Leads	Leads	Leads	Leads	Leads	Leads	Leads	Leads	Leads	-	-
7.5	Lugs	Lugs	Lugs	Lugs	Lugs	Lugs	Lugs	Lugs	Lugs	Lugs	-	-
10	Lugs	Lugs	Lugs	Lugs	Lugs	Lugs	Lugs	Lugs	Lugs	Lugs	-	-
15	Lugs	Lugs	Lugs	Lugs	Lugs	Lugs	Lugs	Lugs	Lugs	Lugs	Dia. 1A	Dia. 1A
25	Lugs	Lugs	Lugs	Lugs	Lugs	Lugs	Lugs	Lugs	Lugs	Lugs	Dia. 1A	Dia. 1A
37.5	Dia. 2	Lugs	Lugs	Lugs	Lugs	Lugs	Lugs	Lugs	Lugs	Lugs	Dia. 1A	Dia. 1A
50	Dia. 2	Lugs	Lugs	Lugs	Lugs	Lugs	Lugs	Lugs	Lugs	Lugs	Dia. 1A	Dia. 1A
75	Dia. 3	Dia. 2	Dia. 2	Dia. 2	Lugs	Lugs	Lugs	Lugs	Lugs	Lugs	Dia. 1A	Dia. 1A
100	Dia. 3	Dia. 2	Dia. 2	Dia. 2	Dia. 2	Dia. 2	Lugs	Lugs	Lugs	Lugs	Dia. 1A	Dia. 1A
150	Dia. 3	Dia. 3	Dia. 3	Dia. 3	Dia. 2	Dia. 2	Dia. 2	Dia. 2	Dia. 2	Lugs	Dia. 1A	Dia. 1A
167	Dia. 3	Dia. 3	Dia. 3	Dia. 3	Dia. 3	Dia. 2	Dia. 2	Dia. 2	Dia. 2	Dia. 2	Dia. 1A	Dia. 1A

THREE PHASE, ALUMINUM AND COPPER TERMINATION - LUGS OR PADS

kVA	VOLTAGE									
	208	230	240	277	380	416	480	600	2400	4160
2	Leads	Leads	Leads	Leads	Leads	Leads	Leads	Leads	-	-
3	Leads	Leads	Leads	Leads	Leads	Leads	Leads	Leads	-	-
6	Leads	Leads	Leads	Leads	Leads	Leads	Leads	Leads	-	-
9	Lugs	Lugs	Lugs	Lugs	Lugs	Lugs	Lugs	Lugs	-	-
15	Lugs	Lugs	Lugs	Lugs	Lugs	Lugs	Lugs	Lugs	Dia. 1A	Dia. 1A
30	Lugs	Lugs	Lugs	Lugs	Lugs	Lugs	Lugs	Lugs	Dia. 1A	Dia. 1A
45	Lugs	Lugs	Lugs	Lugs	Lugs	Lugs	Lugs	Lugs	Dia. 1A	Dia. 1A
75	Lugs	Lugs	Lugs	Lugs	Lugs	Lugs	Lugs	Lugs	Dia. 1A	Dia. 1A
112.5	Lugs**	Dia. 1B	Lugs	Lugs	Lugs	Lugs	Lugs	Lugs	Dia. 1A	Dia. 1A
150	Dia. 1B	Dia. 1B	Dia. 1B	Dia. 1B	Lugs	Lugs	Lugs	Lugs	Dia. 1A	Dia. 1A
225	Dia. 2	Dia. 1B	Dia. 1B	Dia. 1B	Dia. 1B	Dia. 1B	Lugs	Lugs	Dia. 1A	Dia. 1A
300	Dia. 2	Dia. 2	Dia. 2	Dia. 2	Dia. 1B	Dia. 1B	Dia. 1B	Dia. 1B	Dia. 1A	Dia. 1A
500	Dia. 3	Dia. 3	Dia. 3	Dia. 3	Dia. 3	Dia. 2	Dia. 2	Dia. 1B	Dia. 1A	Dia. 1A
600	Dia. 3	Dia. 3	Dia. 3	Dia. 3	Dia. 3	Dia. 2	Dia. 2	Dia. 1B	Dia. 1A	Dia. 1A
750	Dia. 3	Dia. 3	Dia. 3	Dia. 3	Dia. 3	Dia. 3	Dia. 3	Dia. 2	Dia. 1B	Dia. 1A

** Lugs only supplied standard on 600V primary to 208Y/120V secondary units.(excluding K-Factor transformers)
All other voltages supplied standard with Diagram 1B pads.

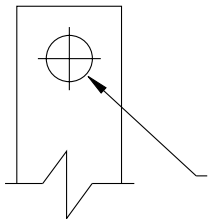

DIAGRAM 1

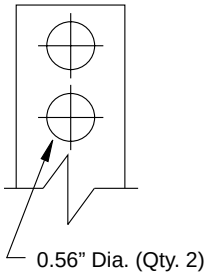

DIAGRAM 2

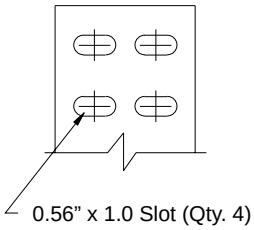

DIAGRAM 3

© Hammond Power Solutions Inc.
Data subject to change without notice.

ELECTRICAL SCHEMATICS AND CONNECTION DIAGRAMS

SCD 1

SCHEMATIC

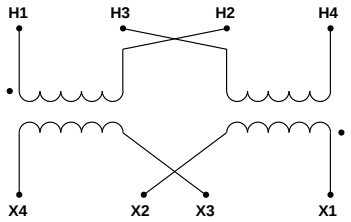

CONNECTIONS

Primary Volts			Connect lines to	Inter-connect
240	480	416	H1, H4	H2-H3
120	240	208	H1, H4	H1-H3, H2-H4

Secondary Volts				Connect lines to	Inter-connect
24	32	48	240	X1, X4	X2-X3
12/24	16/32	24/48	120/240	X1, X2, X4	X2-X3
12	16	24	120	X1, X2	X2-X4, X1-X3

SCD 2

SCHEMATIC

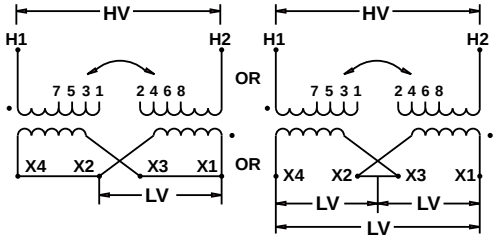

CONNECTIONS

Primary Volts							Connect lines to	Inter-connect
504	440	437	218	291	277	440	H1, H2	1-2
492		426	213	284			H1, H2	2-3
480	416	416	208	277	240	416	H1, H2	3-4
468		406	203	270			H1, H2	4-5
456	400	395	198	263	208	400	H1, H2	5-6
444		385	192	256			H1, H2	6-7
432	380	374	187	249	120	380	H1, H2	7-8
	220						H1, H2	H1-2, H2-1
240	208	208					H1, H2	H1-4, H2-3
228	200	198					H1, H2	H1-6, H2-5
216	190	187					H1, H2	H1-8, H2-7

Secondary Volts	Connect lines to	Inter-connect
240	X1, X4	X2- X3
120	X1, X2	X2-X4, X1-X3
120/240	X1, X2, X4	X2-X3

SCD 3

SCHEMATIC

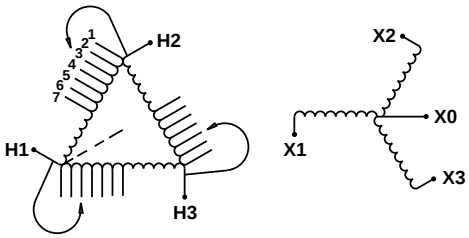

CONNECTIONS

Primary Volts	Connect lines to	Inter-connect
630	H1, H2, H3	1-H1, 1-H2, 1-H3
615	H1, H2, H3	2-H1, 2-H2, 2-H3
600	H1, H2, H3	3-H1, 3-H2, 3-H3
585	H1, H2, H3	4-H1, 4-H2, 4-H3
570	H1, H2, H3	5-H1, 5-H2, 5-H3
480	H1, H2, H3	6-H1, 6-H2, 6-H3
456	H1, H2, H3	7-H1, 7-H2, 7-H3
432	H1, H2, H3	8-H1, 8-H2, 8-H3

Secondary Volts		Connect lines to	Inter-connect
208	480	X1, X2, X3	-
120	120	X1, X0	-
		X2, X0	-
		X3, X0	-

© Hammond Power Solutions Inc.
Data subject to change without notice.

ELECTRICAL SCHEMATICS AND CONNECTION DIAGRAMS

SCD 4

SCHEMATIC

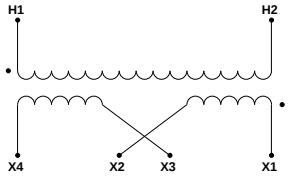

CONNECTIONS

Primary Volts	Connect lines to	Inter-connect
208 277 347 380 416 600 2400 3300 4160 4800 6600 7200	H1, H2	---

Secondary Volts		Connect lines to	Inter-connect
240	24	X1, X4	X2-X3
120/240	12/24	X1, X2, X4	X2-X3
120	12	X1, X2	X2-X4, X1-X3

SCD 5

SCHEMATIC

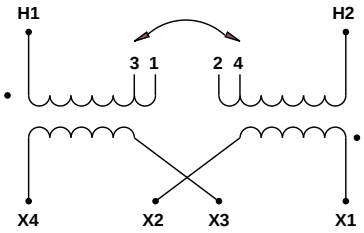

CONNECTIONS

Primary Volts	Connect lines to	Inter-connect
120 208 240 277 380 416 480 600	H1, H2	1-2
114 198 228 263 361 395 456 570	H1, H2	2-3
108 188 216 249 347 374 432 540	H1, H2	3-4

Secondary Volts	Connect lines to	Inter-connect
240	X1, X4	X2-X3
120/240	X1, X2, X4	X2-X3
120	X1, X2	X2-X4, X1-X3

SCD 6

SCHEMATIC

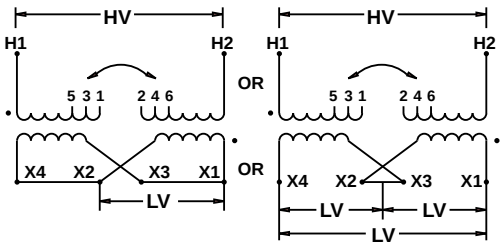

CONNECTIONS

Primary Volts	Connect lines to	Inter-connect
218 277 291 437 504 630 2520 4368	H1, H2	1-2
213 - 284 426 492 615 2460 4264	H1, H2	2-3
208 240 277 416 480 600 2400 4160	H1, H2	3-4
203 - 270 406 468 585 2340 4056	H1, H2	4-5
198 208 263 395 456 570 2280 3952	H1, H2	5-6

Secondary Volts	Connect lines to	Inter-connect
240	X1, X4	X2-X3
120/240	X1, X2, X4	X2-X3
120	X1, X2	X2-X4, X1-X3

SCD 7

SCHEMATIC

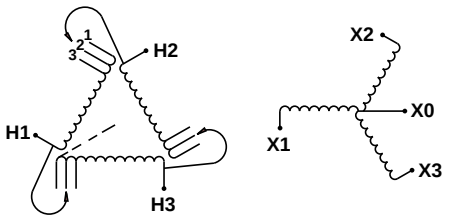

CONNECTIONS

Primary Volts	Connect lines to	Inter-connect
208 218 242 252 437 480 483 504 604 630	H1, H2, H3	1
198 208 230 240 416 456 460 480 575 600	H1, H2, H3	2
187 198 219 228 395 432 437 456 546 570	H1, H2, H3	3

Secondary Volts	Connect lines to
208 230 240 380 416 460 480 600	X1, X2, X3
120 133 139 220 240 265 277 347	X1, X0 X2, X0 X3, X0

© Hammond Power Solutions Inc.
Data subject to change without notice.

ELECTRICAL SCHEMATICS AND CONNECTION DIAGRAMS

SCD 8

SCHEMATIC

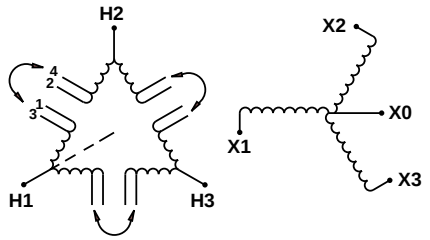

CONNECTIONS

Primary Volts										Connect lines to	Inter-connect
218	242	252	437	483	504	604	630	2520	4368	H1, H2, H3	1-2
208	230	240	416	460	480	575	600	2400	4160	H1, H2, H3	2-3
198	219	228	395	437	456	546	570	2280	3952	H1, H2, H3	3-4

Secondary Volts								Connect lines to
208	230	240	380	416	460	480	600	X1, X2, X3
120	133	139	220	240	265	277	347	X1, X0 X2, X0 X3, X0

SCD 9

SCHEMATIC

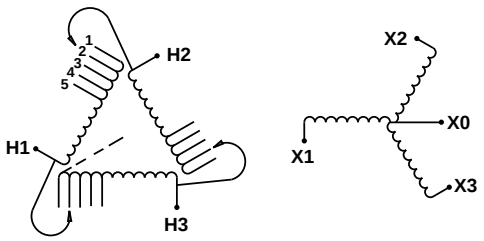

CONNECTIONS

Primary Volts								Connect lines to	Inter-connect
218	242	252	437	483	504	604	630	H1, H2, H3	1
213	236	246	426	472	492	589	615	H1, H2, H3	2
208	230	240	416	460	480	575	600	H1, H2, H3	3
203	224	234	406	449	468	561	585	H1, H2, H3	4
198	219	228	395	437	456	546	570	H1, H2, H3	5

Secondary Volts					Connect lines to	Inter-connect
208	380	416	480	600	X1, X2, X3	-
120	220	240	277	347	X1, X0	-
					X2, X0	-
					X3, X0	-

SCD 10

SCHEMATIC

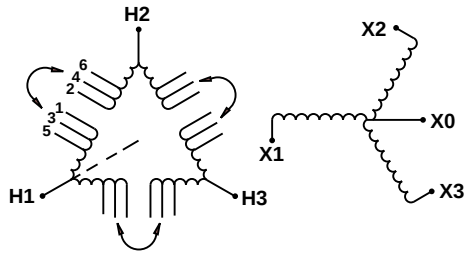

CONNECTIONS

Primary Volts										Connect lines to	Inter-connect
218	242	252	437	483	504	604	630	2520	4368	H1, H2, H3	1-2
213	236	246	426	472	492	589	615	2460	4264	H1, H2, H3	2-3
208	230	240	416	460	480	575	600	2400	4160	H1, H2, H3	3-4
203	224	234	406	449	468	561	585	2340	4056	H1, H2, H3	4-5
198	219	228	395	437	456	546	570	2280	3952	H1, H2, H3	5-6

Secondary Volts					Connect lines to	Inter-connect
208	380	416	480	600	X1, X2, X3	-
120	220	240	277	347	X1, X0	-
					X2, X0	-
					X3, X0	-

© Hammond Power Solutions Inc.
Data subject to change without notice.

ELECTRICAL SCHEMATICS AND CONNECTION DIAGRAMS

SCD 11

SCHEMATIC

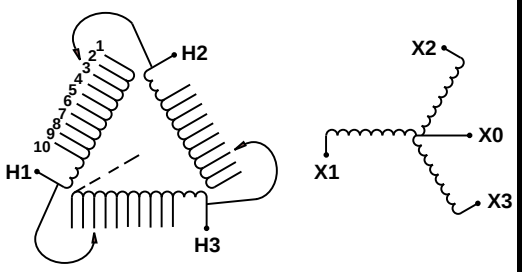

CONNECTIONS

Primary Volts	Connect lines to	Inter-connect
630	H1, H2, H3	1-H1, 1-H2, 1-H3
615	H1, H2, H3	2-H1, 2-H2, 2-H3
600	H1, H2, H3	3-H1, 3-H2, 3-H3
585	H1, H2, H3	4-H1, 4-H2, 4-H3
570	H1, H2, H3	5-H1, 5-H2, 5-H3
504	H1, H2, H3	6-H1, 6-H2, 6-H3
492	H1, H2, H3	7-H1, 7-H2, 7-H3
480	H1, H2, H3	8-H1, 8-H2, 8-H3
468	H1, H2, H3	9-H1, 9-H2, 9-H3
456	H1, H2, H3	10-H1, 10-H2, 10-H3

Secondary Volts		Connect lines to	Inter-connect
208	480	X1, X2, X3	-
120	277	X1, X0	-
		X2, X0	-
		X3, X0	-

SCD 12

SCHEMATIC

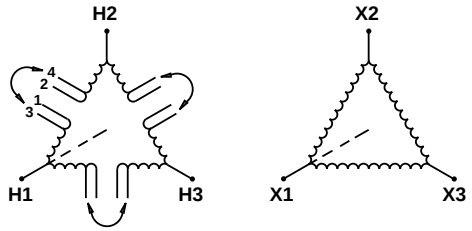

CONNECTIONS

Primary Volts		Connect lines to	Inter-connect
480	600	H1, H2, H3	1-2
456	570	H1, H2, H3	2-3
432	540	H1, H2, H3	3-4

Secondary Volts	Connect lines to	Inter-connect
240	X1, X2, X3	-

SCD 13

SCHEMATIC

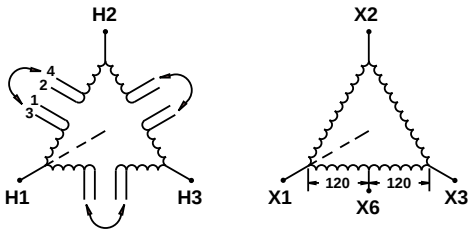

CONNECTIONS

Primary Volts		Connect lines to	Inter-connect
480	600	H1, H2, H3	1-2
456	570	H1, H2, H3	2-3
432	540	H1, H2, H3	3-4

Secondary Volts	Connect lines to	Inter-connect
240	X1, X2, X3	-
120	X1, X6	-
	X3, X6	-

SCD 14

SCHEMATIC

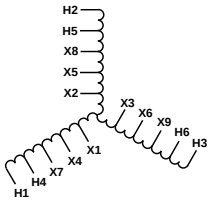

CONNECTIONS

Connect to	Step Down	Step Up
Lines from Supply	H1, H2, H3	X1, X2, X3
Lines to Load	X1, X2, X3	H1, H2, H3

© Hammond Power Solutions Inc.
Data subject to change without notice.

ELECTRICAL SCHEMATICS AND CONNECTION DIAGRAMS

SCD 15

SCHEMATIC

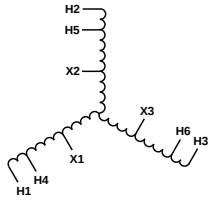

CONNECTIONS

Connect to	Step Down	Step Up
Lines from Supply	H1, H2, H3	X1, X2, X3
Lines to Load	X1, X2, X3	H1, H2, H3

SCD 16

SCHEMATIC

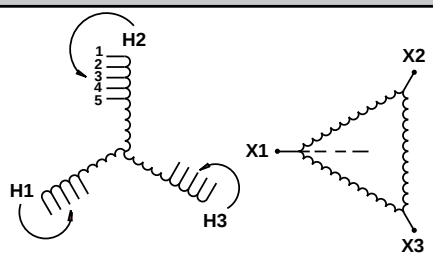

CONNECTIONS

Primary Volts		Connect lines to	Inter-connect
504	630	H1, H2, H3	1
492	615	H1, H2, H3	2
480	600	H1, H2, H3	3
468	585	H1, H2, H3	4
456	570	H1, H2, H3	5
Secondary Volts		**Connect lines to**	**Inter-connect**
240		X1, X2, X3	

SCD 17

SCHEMATIC

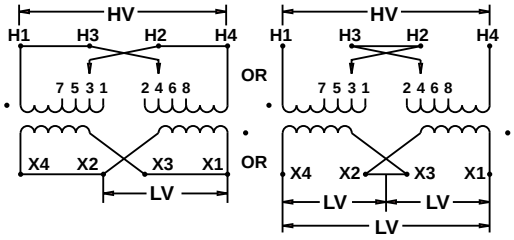

CONNECTIONS

Primary Volts	Connect lines to	Inter-connect
504	H1, H4	1-H2, 2-H3, H2-H3
492	H1, H4	3-H2, 2-H3, H2-H3
480	H1, H4	3-H2, 4-H3, H2-H3
468	H1, H4	5-H2, 4-H3, H2-H3
456	H1, H4	5-H2, 6-H3, H2-H3
444	H1, H4	7-H2, 6-H3, H2-H3
432	H1, H4	7-H2, 8-H3, H2-H3
252	H1, H4	1-H2, 2-H3, H1-H3, H2-H4
240	H1, H4	3-H2, 4-H3, H1-H3, H2-H4
228	H1, H4	5-H2, 6-H3, H1-H3, H2-H4
216	H1, H4	7-H2, 8-H3, H1-H3, H2-H4
Secondary Volts	**Connect lines to**	**Inter-connect**
240	X1, X4	X2- X3
120	X1, X2	X2-X4, X1-X3
120/240	X1, X2, X4	X2-X3

SCD 18

SCHEMATIC

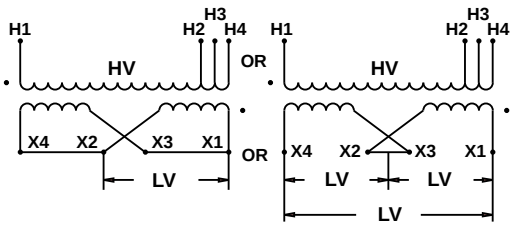

CONNECTIONS

Primary Volts							Connect lines to	Inter-connect
218	252	277	291	437	504	630	H1, H4	-
208	240	240	277	416	480	600	H1, H3	-
198	228	208	263	395	456	570	H1, H2	-
Secondary Volts							**Connect lines to**	**Inter-connect**
240							X1, X4	X2-X3
120							X1, X2	X2-X4, X1-X3
120/240							X1, X2, X4	X2-X3

© Hammond Power Solutions Inc.
Data subject to change without notice.

ELECTRICAL SCHEMATICS AND CONNECTION DIAGRAMS

SCD 19

SCHEMATIC

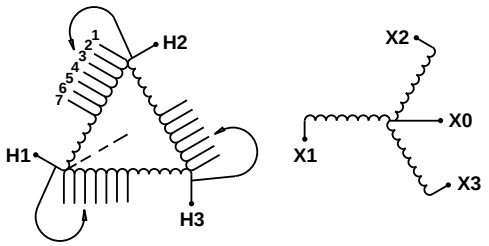

CONNECTIONS

Primary Volts			Connect lines to	Inter-connect
218	504	630	H1, H2, H3	1-H1, 1-H2, 1-H3
213	492	615	H1, H2, H3	2-H1, 2-H2, 2-H3
208	480	600	H1, H2, H3	3-H1, 3-H2, 3-H3
203	468	585	H1, H2, H3	4-H1, 4-H2, 4-H3
198	456	570	H1, H2, H3	5-H1, 5-H2, 5-H3
193	444	556	H1, H2, H3	6-H1, 6-H2, 6-H3
188	432	542	H1, H2, H3	7-H1, 7-H2, 7-H3
Secondary Volts			**Connect lines to**	**Inter-connect**
208	480		X1, X2, X3	-
120	277		X1,X0 | X2,X0 | X3,X0	-

SCD 20

SCHEMATIC

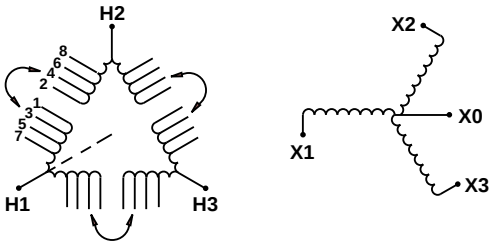

CONNECTIONS

Primary Volts			Connect lines to	Inter-connect
218	504	630	H1, H2, H3	1-2
213	492	600	H1, H2, H3	2-3
208	480	570	H1, H2, H3	3-4
203	468		H1, H2, H3	4-5
198	456	504	H1, H2, H3	5-6
193	444	480	H1, H2, H3	6-7
188	432	456	H1, H2, H3	7-8
Secondary Volts			**Connect lines to**	**Inter-connect**
208	480		X1, X2, X3	-
120	277		X1,X0 | X2,X0 | X3,X0	-

SCD 21

SCHEMATIC

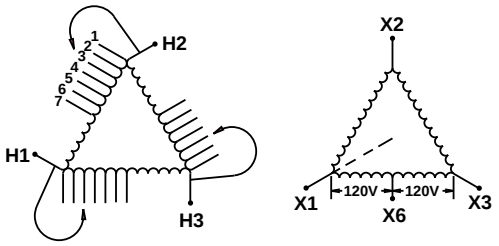

CONNECTIONS

Primary Volts	Connect lines to	Inter-connect
504	H1, H2, H3	1-H1, 1-H2, 1-H3
492	H1, H2, H3	2-H1, 2-H2, 2-H3
480	H1, H2, H3	3-H1, 3-H2, 3-H3
468	H1, H2, H3	4-H1, 4-H2, 4-H3
456	H1, H2, H3	5-H1, 5-H2, 5-H3
444	H1, H2, H3	6-H1, 6-H2, 6-H3
432	H1, H2, H3	7-H1, 7-H2, 7-H3
Secondary Volts	**Connect lines to**	**Inter-connect**
240	X1, X2, X3	-
120	X1, X6	-
	X3, X6	-

SCD 22

SCHEMATIC

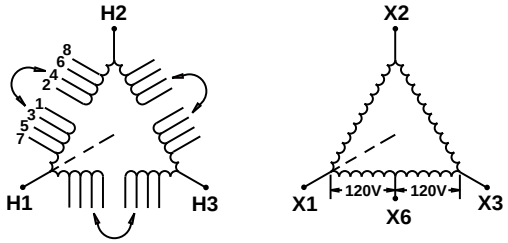

CONNECTIONS

Primary Volts	Connect lines to	Inter-connect
504	H1, H2, H3	1-2
492	H1, H2, H3	2-3
480	H1, H2, H3	3-4
468	H1, H2, H3	4-5
456	H1, H2, H3	5-6
444	H1, H2, H3	6-7
432	H1, H2, H3	7-8
Secondary Volts	**Connect lines to**	**Inter-connect**
240	X1, X2, X3	-
120	X1, X6	-
	X3, X6	-

© Hammond Power Solutions Inc.
Data subject to change without notice.

ELECTRICAL SCHEMATICS AND CONNECTION DIAGRAMS

SCD 23

SCHEMATIC

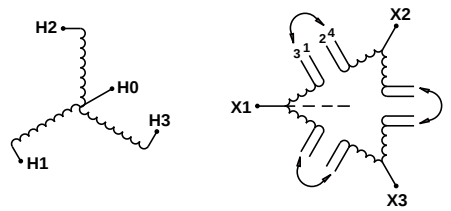

CONNECTIONS

Primary Volts			Connect lines to	Inter-connect
208	240	252	X1, X2, X3	1-2
198	228	240	X1, X2, X3	2-3
188	216	228	X1, X2, X3	3-4

Secondary Volts				Connect lines to
230	260	460	480	H1, H2, H3
133	139	265	277	H1, H0 H2, H0 H3, H0

SCD 24

SCHEMATIC

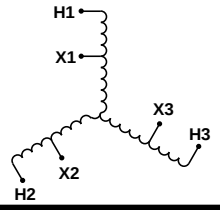

CONNECTIONS

Connect to	Step Down	Step Up
Lines from Supply	H1, H2, H3	X1, X2, X3
Lines to Load	X1, X2, X3	H1, H2, H3

SCD 25

SCHEMATIC

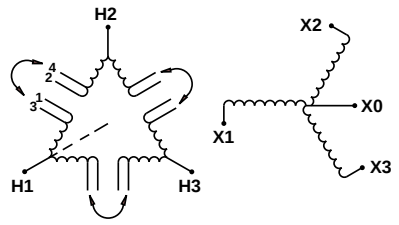

CONNECTIONS

Primary Volts					Connect lines to	Inter-connect
208	240	416	480	600	H1, H2, H3	1-2
198	228	395	456	570	H1, H2, H3	2-3
187	216	374	432	540	H1, H2, H3	3-4

Secondary Volts					Connect lines to	Inter-connect
208	380	416	480	600	X1, X2, X3	-
120	220	240	277	347	X1, X0 X2, X0 X3, X0	-

SCD 26

SCHEMATIC

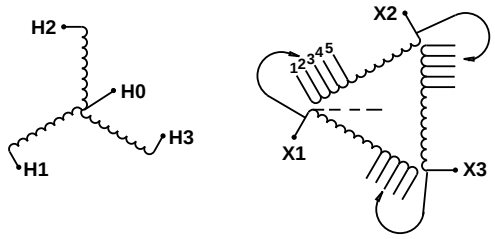

CONNECTIONS

Primary Volts		Connect lines to	Inter-connect
218	252	X1, X2, X3	1
213	246	X1, X2, X3	2
208	240	X1, X2, X3	3
203	234	X1, X2, X3	4
198	228	X1, X2, X3	5

Secondary Volts			Connect lines to	Inter-connect
460	480	600	H1, H2, H3	-
265	277	347	H1, H0 H2, H0 H3, H0	-

SCD 27

SCHEMATIC

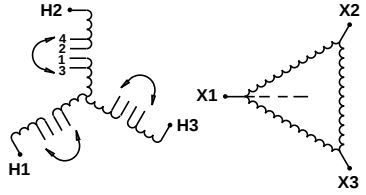

CONNECTIONS

Primary Volts	Connect lines to	Inter-connect
630	H1, H2, H3	1-2
600	H1, H2, H3	2-3
570	H1, H2, H3	3-4

Secondary Volts	Connect lines to	Inter-connect
240	X1, X2, X3	-

© Hammond Power Solutions Inc.
Data subject to change without notice.

ELECTRICAL SCHEMATICS AND CONNECTION DIAGRAMS

SCD 28

SCHEMATIC

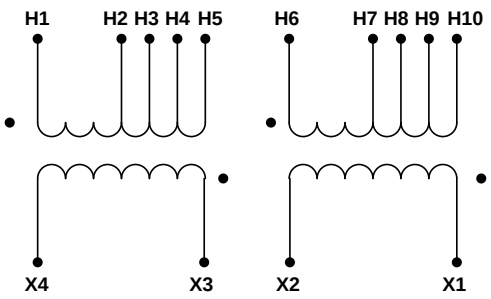

CONNECTIONS

Primary Volts	Connect lines to	Inter-connect
480 (60Hz)	H1, H10	H5-H6
440	H1, H10	H5-H6
416	H1, H9	H4-H6
400	H1, H8	H3-H6
380	H1, H7	H2-H6
240 (60 Hz)	H1, H10	H1-H6, H5-H10
220	H1, H10	H1-H6, H5-H10
208	H1, H9	H1-H6, H4-H9
200	H1, H8	H1-H6, H3-H8
190	H1, H7	H1-H6, H2-H7
Secondary Volts	**Connect lines to**	**Inter-connect**
240	X1, X4	X2-X3
120/240	X1, X2, X4	X2-X3
120	X1, X4	X2-X4, X1-X3

SCD 29

SCHEMATIC

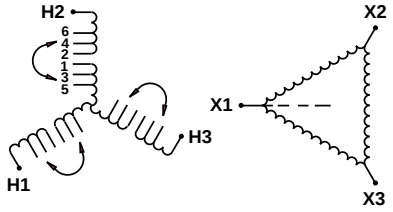

CONNECTIONS

Primary Volts		Connect lines to	Inter-connect
630	504	H1, H2, H3	1-2
615	492	H1, H2, H3	2-3
600	480	H1, H2, H3	3-4
585	468	H1, H2, H3	4-5
570	456	H1, H2, H3	5-6
Secondary Volts		**Connect lines to**	**Inter-connect**
240		X1, X2, X3	

SCD 30

SCHEMATIC

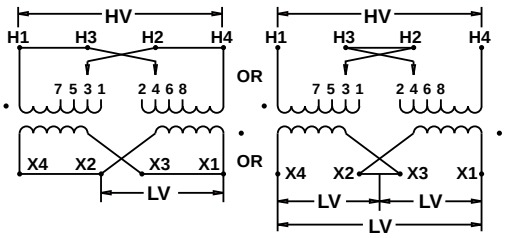

CONNECTIONS

Primary Volts	Connect lines to	Inter-connect
440	H1, H4	1-H2, 2-H3, H2-H3
416	H1, H4	3-H2, 4-H3, H2-H3
400	H1, H4	5-H2, 6-H3, H2-H3
380	H1, H4	7-H2, 8-H3, H2-H3
220	H1, H4	1-H2, 2-H3, H1-H3, H2-H4
208	H1, H4	3-H2, 4-H3, H1-H3, H2-H4
200	H1, H4	5-H2, 6-H3, H1-H3, H2-H4
190	H1, H4	7-H2, 8-H3, H1-H3, H2-H4
Secondary Volts	**Connect lines to**	**Inter-connect**
240	X1, X4	X2- X3
120	X1, X2	X2-X4, X1-X3
120/240	X1, X2, X4	X2-X3

© Hammond Power Solutions Inc.
Data subject to change without notice.

ELECTRICAL SCHEMATICS AND CONNECTION DIAGRAMS

SCD 31

SCHEMATIC

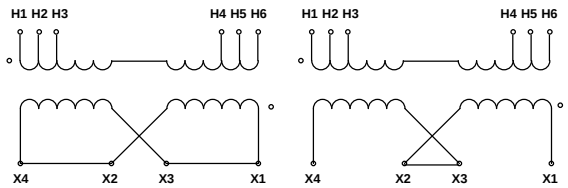

CONNECTIONS

Primary Volts					Connect lines to	Inter-connect
218	291	437	504	630	H1, H6	-
213	284	426	492	615	H1, H5	-
208	277	416	480	600	H2, H5	-
203	270	406	468	585	H2, H4	-
198	263	395	456	570	H3, H4	-

Secondary Volts	Connect lines to	Inter-connect
240	X1, X4	X2-X3
120/240	X1, X2, X4	X2-X3
120	X1, X2	X2-X4, X1-X3

SCD 32

SCHEMATIC

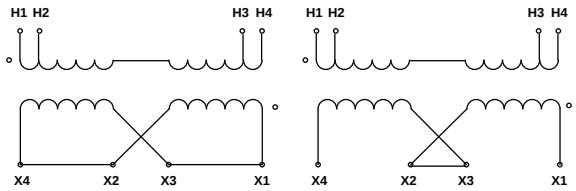

CONNECTIONS

Primary Volts					Connect lines to	Inter-connect
208	277	416	480	600	H1, H4	-
198	263	395	456	570	H1, H3	-
188	249	374	432	540	H2, H3	-

Secondary Volts	Connect lines to	Inter-connect
240	X1, X4	X2-X3
120/240	X1, X2, X4	X2-X3
120	X1, X2	X2-X4, X1-X3

SCD 33

SCHEMATIC

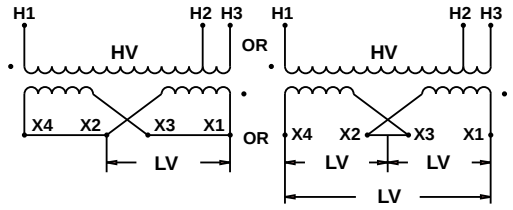

CONNECTIONS

Primary Volts	Connect lines to	Inter-connect
380	H1, H3	-
347	H1, H2	-

Secondary Volts	Connect lines to	Inter-connect
240	X1, X4	X2-X3
120/240	X1, X2, X4	X2-X3
120	X1, X2	X2-X4, X1-X3

SCD 34

SCHEMATIC

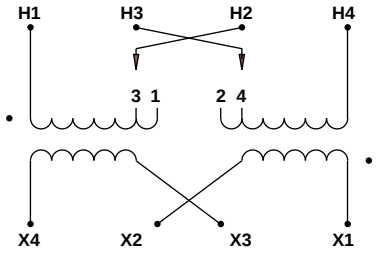

CONNECTIONS

Primary Volts	Connect lines to	Inter-connect
480	H1, H4	1-H2, 2-H3, H2-H3
456	H1, H4	2-H3, 3-H2, H2-H3
432	H1, H4	3-H2, 4-H3, H2-H3
240	H1, H4	1-H2, 2-H3, H1-H3, H2-H4
216	H1, H4	3-H2, 4-H3, H1-H3, H2-H4

Secondary Volts	Connect lines to	Inter-connect
240	X1, X4	X2-X3
120/240	X1, X2, X4	X2-X3
120	X1, X2	X2-X4, X1-X3

© Hammond Power Solutions Inc.
Data subject to change without notice.

ELECTRICAL SCHEMATICS AND CONNECTION DIAGRAMS

SCD 35

SCHEMATIC

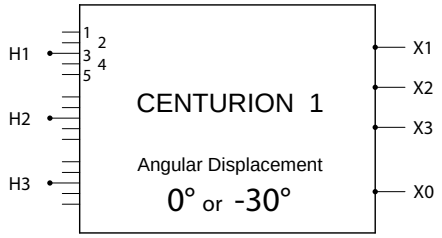

CONNECTIONS

Primary Volts			Connect lines to	Inter-connect
218*	504	630	H1, H2, H3	1-H1, 1-H2, 1-H3
213*	492	615	H1, H2, H3	2-H1, 2-H2, 2-H3
208*	480	600	H1, H2, H3	3-H1, 3-H2, 3-H3
203*	468	585	H1, H2, H3	4-H1, 4-H2, 4-H3
198*	456	570	H1, H2, H3	5-H1, 5-H2, 5-H3
Secondary Volts			**Connect lines to**	**Inter-connect**
208	480	600	X1, X2, X3	-
120	277	347	X1,X0 | X2,X0 | X3,X0	-

* Standard 2-2.5% FCAN and 2-2.5% FCBN primary taps for 208V H2EM units only available up to 75 kVA. Please consult factory for standard taps on 208V primary units over 75 kVA.

SCD 36

SCHEMATIC

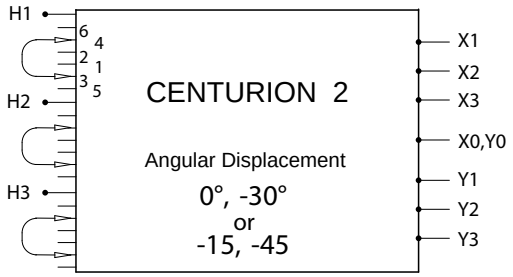

CONNECTIONS

Primary Volts			Connect lines to	Inter-connect
218*	504	630	H1, H2, H3	1-2
213*	492	615	H1, H2, H3	2-3
208*	480	600	H1, H2, H3	3-4
203*	468	585	H1, H2, H3	4-5
198*	456	570	H1, H2, H3	5-6
Secondary Volts			**Connect lines to**	**Inter-connect**
208	480	600	X1, X2, X3	-
120	277	347	Y1, Y2, Y3	-
			X1, X0/Y0	-
			X2, X0/Y0	-
			X3, X0/Y0	-
			Y1, X0/Y0	-
			Y2, X0/Y0	-
			Y3, X0/Y0	-

* Standard 2-2.5% FCAN and 2-2.5% FCBN primary taps for 208V H2EM units only available up to 75 kVA. Please consult factory for standard taps on 208V primary units over 75 kVA.

SCD 37

SCHEMATIC

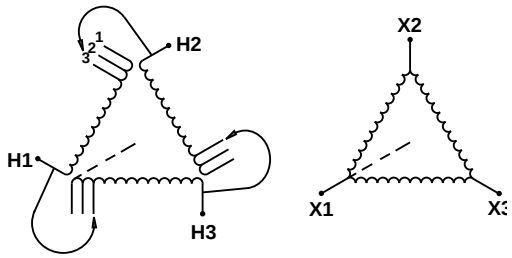

CONNECTIONS

Primary Volts	Connect lines to	Inter-connect
480	H1, H2, H3	1
456	H1, H2, H3	2
432	H1, H2, H3	3
Secondary Volts	**Connect lines to**	**Inter-connect**
240	X1, X2, X3	-

© Hammond Power Solutions Inc.
Data subject to change without notice.

ELECTRICAL SCHEMATICS AND CONNECTION DIAGRAMS

SCD 38

SCHEMATIC

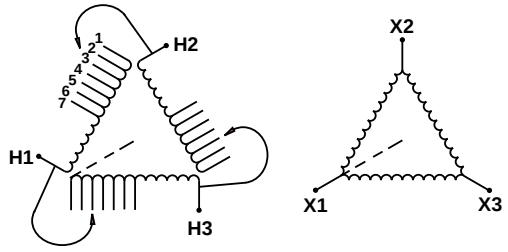

CONNECTIONS

Primary Volts	Connect lines to	Inter-connect
504	H1, H2, H3	1
492	H1, H2, H3	2
480	H1, H2, H3	3
468	H1, H2, H3	4
456	H1, H2, H3	5
444	H1, H2, H3	6
432	H1, H2, H3	7

Secondary Volts	Connect lines to	Inter-connect
240	X1, X2, X3	-

SCD 39

SCHEMATIC

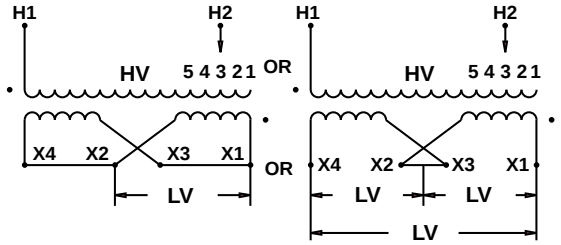

CONNECTIONS

Primary Volts					Connect lines to	Inter-connect
218	291	437	504	630	H1, H2	1
213	284	426	492	615	H1, H2	2
208	277	416	480	600	H1, H2	3
203	270	406	468	585	H1, H2	4
198	263	395	456	570	H1, H2	5

Secondary Volts	Connect lines to	Inter-connect
240	X1, X4	X2-X3
120/240	X1, X2, X4	X2-X3
120	X1, X2	X2-X4, X1-X3

SCD 40

SCHEMATIC

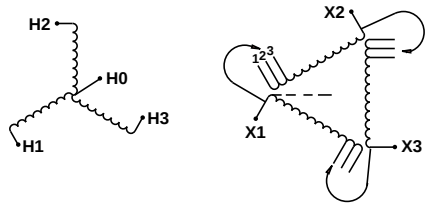

CONNECTIONS

Primary Volts		Connect lines to	Inter-connect
208	240	X1, X2, X3	1
198	228	X1, X2, X3	2
188	216	X1, X2, X3	3

Secondary Volts				Connect lines to
230	260	460	480	H1, H2, H3
133	139	265	277	H1, H0 H2, H0 H3, H0

SCD 41

SCHEMATIC

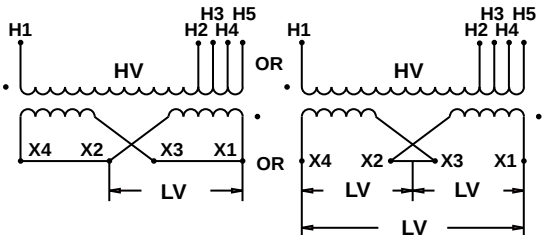

CONNECTIONS

Primary Volts	Connect lines to	Inter-connect
277	H1, H5	-
240	H1, H4	-
208	H1, H3	-
120	H1, H2	-

Secondary Volts	Connect lines to	Inter-connect
240	X1, X4	X2-X3
120/240	X1, X2, X4	X2-X3
120	X1, X2	X2-X4, X1-X3

© Hammond Power Solutions Inc.
Data subject to change without notice.

ELECTRICAL SCHEMATICS AND CONNECTION DIAGRAMS

SCD 42

SCHEMATIC

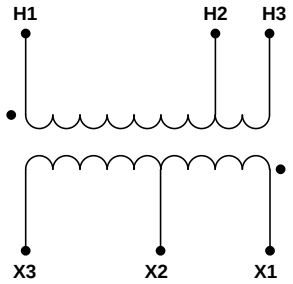

CONNECTIONS

Primary Volts	Connect lines to	Inter-connect
480	H1, H3	-
277	H1, H2	-

Secondary Volts	Connect lines to	Inter-connect
277	X1, X3	-
208	X1, X2	-

SCD 43

SCHEMATIC

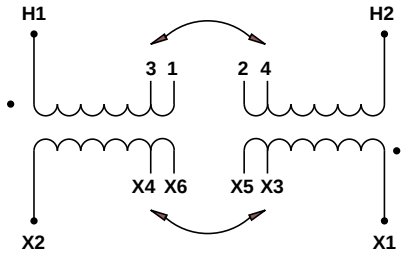

CONNECTIONS

Primary Volts	Connect lines to	Inter-connect
480	H1, H2	1-2
277	H1, H2	3-4

Secondary Volts	Connect lines to	Inter-connect
277	X1, X2	X5-X6
208	X1, X2	X3-X4

SCD 44

SCHEMATIC

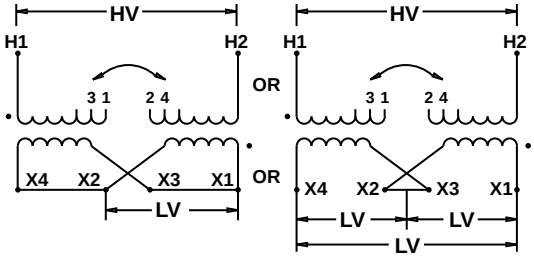

CONNECTIONS

Primary Volts	Connect lines to	Inter-connect
380	H1, H2	1-2
347	H1, H2	3-4

Secondary Volts	Connect lines to	Inter-connect
240	X1, X4	X2-X3
120/240	X1, X2, X4	X2-X3
120	X1, X2	X2-X4, X1-X3

SCD 45

SCHEMATIC

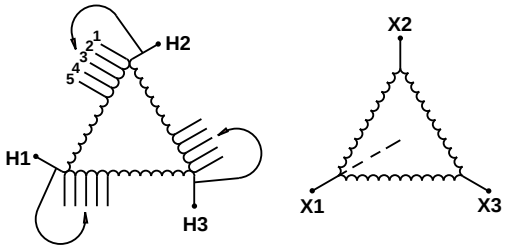

CONNECTIONS

Primary Volts	Connect lines to	Inter-connect
630	H1, H2, H3	1
615	H1, H2, H3	2
600	H1, H2, H3	3
585	H1, H2, H3	4
570	H1, H2, H3	5

Secondary Volts	Connect lines to	Inter-connect
240	X1, X2, X3	-

© Hammond Power Solutions Inc.
Data subject to change without notice.

ELECTRICAL SCHEMATICS AND CONNECTION DIAGRAMS

SCD 46

SCHEMATIC

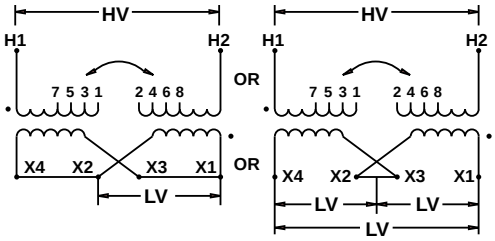

CONNECTIONS

Primary Volts	Connect lines to	Inter-connect
480 (60Hz)	H1, H2	1-2
440	H1, H2	1-2
416	H1, H2	3-4
400	H1, H2	5-6
380	H1, H2	7-8
240 (60Hz)	H1, H2	H1-2, H2-1
220	H1, H2	H1-2, H2-1
208	H1, H2	H1-4, H2-3
200	H1, H2	H1-6, H2-5
190	H1, H2	H1-8, H2-7
Secondary Volts	**Connect lines to**	**Inter-connect**
240	X1, X4	X2- X3
120	X1, X2	X2-X4, X1-X3
120/240	X1, X2, X4	X2-X3

SCD 47

SCHEMATIC

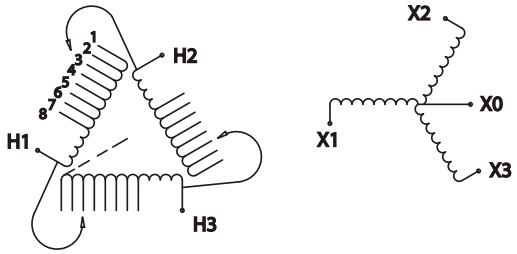

CONNECTIONS

Primary Volts	Connect lines to	Inter-connect
630	H1, H2, H3	1-H1, 1-H2, 1-H3
615	H1, H2, H3	2-H1, 2-H2, 2-H3
600	H1, H2, H3	3-H1, 3-H2, 3-H3
585	H1, H2, H3	4-H1, 4-H2, 4-H3
570	H1, H2, H3	5-H1, 5-H2, 5-H3
480	H1, H2, H3	6-H1, 6-H2, 6-H3
456	H1, H2, H3	7-H1, 7-H2, 7-H3
432	H1, H2, H3	8-H1, 8-H2, 8-H3
Secondary Volts	**Connect lines to**	**Inter-connect**
480	X1, X2, X3	-
277	X1,X0 | X2,X0 | X3,X0	-

SCD 48

SCHEMATIC

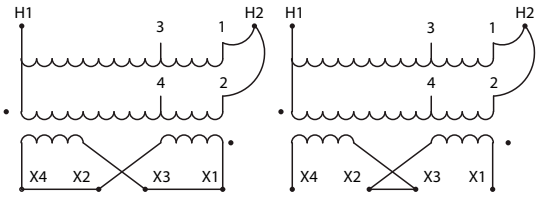

CONNECTIONS

Primary Volts	Connect lines to	Inter-connect
347	H1, H2	H2-3 & 4
380	H1, H2	H2-1 & 2
Secondary Volts	**Connect lines to**	**Inter-connect**
240	X1, X4	X2-X3
120	X1, X2	X1-X3, X2-X3
120/240	X1, X2, X4	X2-X3

© Hammond Power Solutions Inc.
Data subject to change without notice.

ELECTRICAL SCHEMATICS AND CONNECTION DIAGRAMS

SCD 49

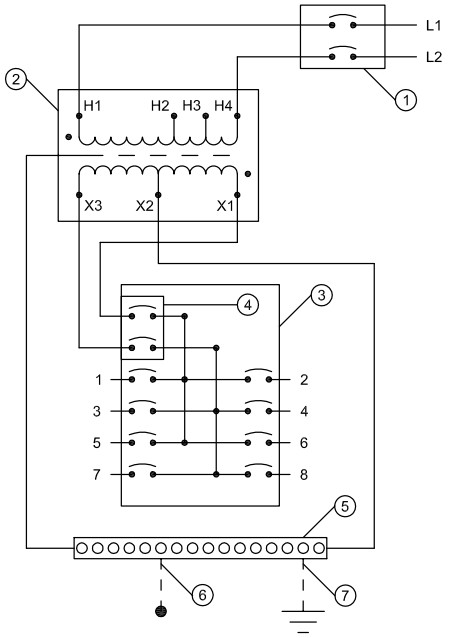

NEUTRAL NEUTRE NEUTRAL	WIRE COMBINATIONS COMBINAISONS DE FILS COMBINACIONES DEL CABLE	1 x 14 - 4 CU 2 x 14 - 10 CU 3 x 14 - 10 CU	1 x 12 - 4 AL 2 x 12 - 10 AL 3 x 12 - 10 AL		
	TIGHTENING TORQUE COUPLE DE SERRAGE TORQUE DE APRIETE	14 - 10 8 6 - 4	CU / AL CU / AL CU / AL	20 25 35	INCH-LBS LIVRES-POUCES PULGADAS - LIBRAS

SCD 50

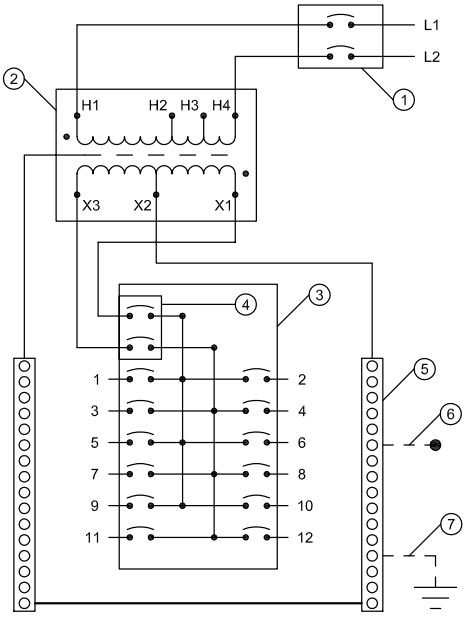

NEUTRAL NEUTRE NEUTRAL	WIRE COMBINATIONS COMBINAISONS DE FILS COMBINACIONES DEL CABLE	1 x 14 - 4 CU 2 x 14 - 10 CU 3 x 14 - 10 CU	1 x 12 - 4 AL 2 x 12 - 10 AL 3 x 12 - 10 AL		
	TIGHTENING TORQUE COUPLE DE SERRAGE TORQUE DE APRIETE	14 - 10 8 6 - 4	CU / AL CU / AL CU / AL	20 25 35	INCH-LBS LIVRES-POUCES PULGADAS - LIBRAS

1 - Main Breaker
2 - Transformer
3 - Panel Board
4 - Panel Board Feed Breaker
5 - Neutral
6 - Bond When Required
7 - Ground When Required

- The maximum continuous load current not to exceed 100% of the transformer nominal current.
- The maximum continuous load current for the branch circuits not to exceed 80% of the ratings of the circuit breakers employed in other than motor circuits.
- Maximum short-circuit capacity 10,000 ampls

© Hammond Power Solutions Inc.
Data subject to change without notice.

ELECTRICAL SCHEMATICS AND CONNECTION DIAGRAMS

SCD 51

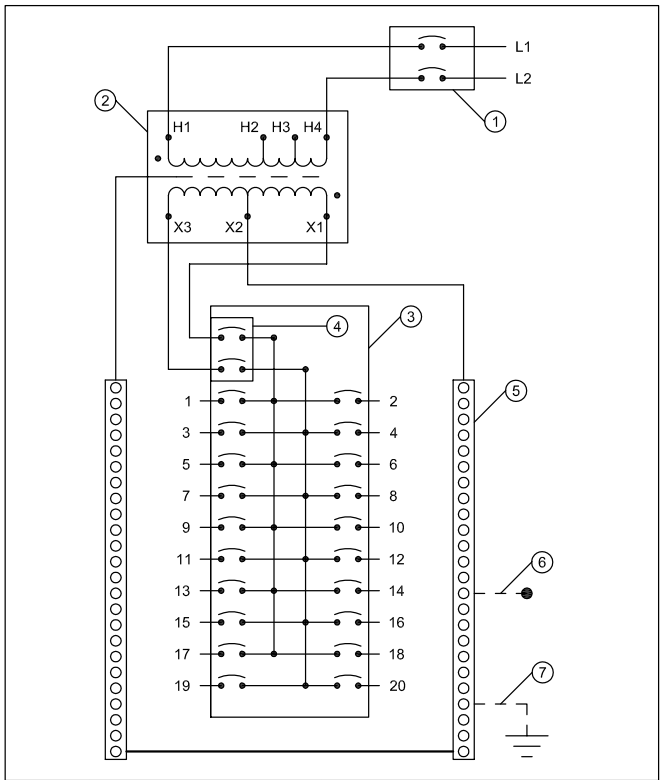

NEUTRAL NEUTRE NEUTRAL	WIRE COMBINATIONS COMBINAISONS DE FILS COMBINACIONES DEL CABLE	1 x 14 - 4 CU 2 x 14 - 10 CU 3 x 14 - 10 CU		1 x 12 - 4 AL 2 x 12 - 10 AL 3 x 12 - 10 AL	
	TIGHTENING TORQUE COUPLE DE SERRAGE TORQUE DE APRIETE	14 - 10 8 6 - 4	CU / AL CU / AL CU / AL	20 25 35	INCH-LBS LIVRES-POUCES PULGADAS - LIBRAS

1 - Main Breaker
2 - Transformer
3 - Panel Board
4 - Panel Board Feed Breaker
5 - Neutral
6 - Bond When Required
7 - Ground When Required

- The maximum continuous load current not to exceed 100% of the transformer nominal current.
- The maximum continuous load current for the branch circuits not to exceed 80% of the ratings of the circuit breakers employed in other than motor circuits.
- Maximum short-circuit capacity 10,000 ampls

© Hammond Power Solutions Inc.
Data subject to change without notice.

ALPHA NUMERIC PART NUMBER INDEX

Catalog Part No.	Catalog Page No.
2909B.2	146
2909B.4	146
2909B.5	146
2909B.75	146
2909B1	146
2909B1.5	146
2909B10	146
2909B12	146
2909B16	146
2909B2	146
2909B2.5	146
2909B3	146
2909B4	146
2909B5	146
2909B6	146
2909B8	146
2909C.2	146
2909C.4	146
2909C.5	146
2909C.75	146
2909C1.	146
2909C1.5	146
2909C10.	146
2909C12.	146
2909C16.	146
2909C2.	146
2909C2.5	146
2909C3.	146
2909C4.	146
2909C5.	146
2909C6.	146
2909C8.	146
2909D.2	146
2909D.4	146
2909D.5	146
2909D.75	146
2909D1.	146
2909D1.5	146
2909D10.	146
2909D12.	146
2909D16.	146
2909D2.	146
2909D2.5	146
2909D3.	146
2909D4.	146
2909D5.	146
2909D6.	146
2909D8.	146
3009B.3	147
3009B.5	147
3009B.75	147
3009B1	147
3009B1.5	147
3009B10	147
3009B12	147
3009B16	147
3009B2	147
3009B2.5	147
3009B3	147
3009B4	147
3009B5	147
3009B6	147
3009B8	147
3009C.3	147
3009C.5	147
3009C.75	147
3009C1.	147
3009C1.5	147
3009C10.	147
3009C12.	147
3009C16.	147
3009C2.	147
3009C2.5	147
3009C3.	147
3009C4.	147
3009C5.	147
3009C6.	147
3009C8.	147
3009D.3	147
3009D.5	147
3009D.75	147
3009D1.	147
3009D1.5	147
3009D10.	147
3009D12.	147
3009D16.	147
3009D2.	147
3009D2.5	147
3009D3.	147
3009D4.	147
3009D5.	147
3009D6.	147
3009D8.	147
C1F002CES	228
C1F002EES	227
C1F002GES	227
C1F002HRS	228
C1F002JES	229
C1F002LES	228
C1F002PES	229
C1F002WES	227
C1F002XES	229
C1F003CES	228
C1F003EES	227
C1F003GES	227
C1F003HRS	228
C1F003JES	229
C1F003LES	228
C1F003PES	229
C1F003WES	227
C1F003XES	229
C1F005CES	228
C1F005EES	227
C1F005GES	227
C1F005HRS	228
C1F005JES	229
C1F005LES	228
C1F005PES	229
C1F005WES	227
C1F005XES	229
C1F007CES	228
C1F007EES	227
C1F007GES	227
C1F007HRS	228
C1F007JES	229
C1F007LES	228
C1F007PES	229
C1F007WES	227
C1F007XES	229
C1F010CES	228
C1F010EES	227
C1F010GES	227
C1F010HRS	228
C1F010JES	229
C1F010LES	228
C1F010PES	229
C1F010WES	227
C1F010XES	229
C1F015LES	228
C1F015PES	229
C1F025LES	228
C1F025PES	229
C1F037LES	228
C1F037PES	229
C1F1C0CES	228
C1F1C0EES	227
C1F1C0GES	227
C1F1C0HRS	228
C1F1C0JES	229
C1F1C0LES	228
C1F1C0PES	229
C1F1C0WES	227
C1F1C0XES	229
C1F1C5CES	228
C1F1C5EES	227
C1F1C5GES	227

© Hammond Power Solutions Inc.

Data subject to change without notice.

ALPHA NUMERIC PART NUMBER INDEX

Catalog Part No.	Catalog Page No.
C1F1C5HRS	228
C1F1C5JES	229
C1F1C5LES	228
C1F1C5PES	229
C1F1C5WES	227
C1F1C5XES	229
C1FC05CE	228
C1FC05EE	227
C1FC05GE	227
C1FC05HR	228
C1FC05JE	229
C1FC05LE	228
C1FC05PE	229
C1FC05WE	227
C1FC05XE	229
C1FC10CE	228
C1FC10EE	227
C1FC10GE	227
C1FC10HR	228
C1FC10JE	229
C1FC10LE	228
C1FC10PE	229
C1FC10WE	227
C1FC10XE	229
C1FC15CE	228
C1FC15EE	227
C1FC15GE	227
C1FC15HR	228
C1FC15JE	229
C1FC15LE	228
C1FC15PE	229
C1FC15WE	227
C1FC15XE	229
C1FC25CE	228
C1FC25EE	227
C1FC25GE	227
C1FC25HR	228
C1FC25JE	229
C1FC25LE	228
C1FC25PE	229
C1FC25WE	227
C1FC25XE	229
C1FC35CE	228
C1FC35EE	227
C1FC35GE	227
C1FC35HR	228
C1FC35JE	229
C1FC35LE	228
C1FC35PE	229
C1FC35WE	227
C1FC35XE	229
C1FC50CE	228
C1FC50EE	227
C1FC50GE	227
C1FC50HR	228
C1FC50JE	229
C1FC50LE	228
C1FC50PE	229
C1FC50WE	227
C1FC50XE	229
C1FC75CES	228
C1FC75EES	227
C1FC75GES	227
C1FC75HRS	228
C1FC75JES	229
C1FC75LES	228
C1FC75PES	229
C1FC75WES	227
C1FC75XES	229
C3F002BBS	231
C3F002BKS	231
C3F002DBS	231
C3F002DKS	231
C3F002KBS	232
C3F002KDS	232
C3F002PBS	232
C3F002PDS	232
C3F003BBS	231
C3F003BKS	231
C3F003DBS	231
C3F003DKS	231
C3F003KBS	232
C3F003KDS	232
C3F003PBS	232
C3F003PDS	232
C3F006BBS	231
C3F006BKS	231
C3F006DBS	231
C3F006DKS	231
C3F006KBS	232
C3F006KDS	232
C3F006PBS	232
C3F006PDS	232
C3F009BBS	231
C3F009BKS	231
C3F009DBS	231
C3F009DKS	231
C3F009KBS	232
C3F009KDS	232
C3F009PBS	232
C3F009PDS	232
C3F015BBS	231
C3F015BKS	231
C3F015DBS	231
C3F015DKS	231
C3F015KBS	232
C3F015KDS	232
C3F015PBS	232
C3F015PDS	232
C3F030BBS	231
C3F030BKS	231
C3F030DBS	231
C3F030DKS	231
C3F030KBS	232
C3F030KDS	232
C3F030PBS	232
C3F030PDS	232
C3F045BBS	231
C3F045BKS	231
C3F045DBS	231
C3F045DKS	231
C3F045KBS	232
C3F045KDS	232
C3F045PBS	232
C3F045PDS	232
C3F075BBS	231
C3F075BKS	231
C3F075DBS	231
C3F075DKS	231
C3F075KBS	232
C3F075KDS	232
C3F075PBS	232
C3F075PDS	232
DE007BK	133
DE007BKCN	137
DE007CC	133
DE007CCCN	138
DE007JC	134
DE007JCCN	138
DE007JH	134
DE007JHCN	139
DE007JJ	135
DE007JJCN	139
DE007KD	135
DE007KDCN	140
DE007KK	136
DE007KKCN	140
DE007NJ	136
DE007NJCN	141
DE007NN	137
DE007NNCN	141
DE011BK	133
DE011BKCN	137
DE011CC	133
DE011CCCN	138
DE011JC	134

© Hammond Power Solutions Inc.

Data subject to change without notice.

ALPHA NUMERIC PART NUMBER INDEX

Catalog Part No.	Catalog Page No.
DE011JCCN	138
DE011JH	134
DE011JHCN	139
DE011JJ	135
DE011JJCN	139
DE011KD	135
DE011KDCN	140
DE011KK	136
DE011KKCN	140
DE011NJ	136
DE011NJCN	141
DE011NN	137
DE011NNCN	141
DE014BK	133
DE014BKCN	137
DE014CC	133
DE014CCCN	138
DE014JC	134
DE014JCCN	138
DE014JH	134
DE014JHCN	139
DE014JJ	135
DE014JJCN	139
DE014KD	135
DE014KDCN	140
DE014KK	136
DE014KKCN	140
DE014NJ	136
DE014NJCN	141
DE014NN	137
DE014NNCN	141
DE020BK	133
DE020BKC	137
DE020CC	133
DE020CCC	138
DE020JC	134
DE020JCCN	138
DE020JH	134
DE020JHCN	139
DE020JJ	135
DE020JJCN	139
DE020KD	135
DE020KDCN	140
DE020KK	136
DE020KKCN	140
DE020NJ	136
DE020NJCN	141
DE020NN	137
DE020NNCN	141
DE027BK	133
DE027BKC	137
DE027CC	133
DE027CCC	138
DE027JC	134
DE027JCCN	138
DE027JH	134
DE027JHCN	139
DE027JJ	135
DE027JJCN	139
DE027KD	135
DE027KDCN	140
DE027KK	136
DE027KKCN	140
DE027NJ	136
DE027NJCN	141
DE027NN	137
DE027NNCN	141
DE034BK	133
DE034BKC	137
DE034CC	133
DE034CCC	138
DE034JC	134
DE034JCC	138
DE034JH	134
DE034JHC	139
DE034JJ	135
DE034JJC	139
DE034KD	135
DE034KDCN	140
DE034KK	136
DE034KKCN	140
DE034NJ	136
DE034NJCN	141
DE034NN	137
DE034NNCN	141
DE040BK	133
DE040BKC	137
DE040CC	133
DE040CCC	138
DE040JC	134
DE040JCC	138
DE040JH	134
DE040JHC	139
DE040JJ	135
DE040JJC	139
DE040KD	135
DE040KDC	140
DE040KK	136
DE040KKC	140
DE040NJ	136
DE040NJCN	141
DE040NN	137
DE040NNCN	141
DE051BK	133
DE051BKC	137
DE051CC	133
DE051CCC	138
DE051JC	134
DE051JCC	138
DE051JH	134
DE051JHC	139
DE051JJ	135
DE051JJC	139
DE051KD	135
DE051KDC	140
DE051KK	136
DE051KKC	140
DE051NJ	136
DE051NJC	141
DE051NN	137
DE051NNC	141
DE063BK	133
DE063BKC	137
DE063CC	133
DE063CCC	138
DE063JC	134
DE063JCC	138
DE063JH	134
DE063JHC	139
DE063JJ	135
DE063JJC	139
DE063KD	135
DE063KDC	140
DE063KK	136
DE063KKC	140
DE063NJ	136
DE063NJC	141
DE063NN	137
DE063NNC	141
DE075BK	133
DE075BKC	137
DE075CC	133
DE075CCC	138
DE075JC	134
DE075JCC	138
DE075JH	134
DE075JHC	139
DE075JJ	135
DE075JJC	139
DE075KD	135
DE075KDC	140
DE075KK	136
DE075KKC	140
DE075NJ	136
DE075NJC	141
DE075NN	137

© Hammond Power Solutions Inc.

Data subject to change without notice.

ALPHA NUMERIC PART NUMBER INDEX

Catalog Part No.	Catalog Page No.
DE075NNC	141
DE093BK	133
DE093BKC	137
DE093CC	133
DE093CCC	138
DE093JC	134
DE093JCC	138
DE093JH	134
DE093JHC	139
DE093JJ	135
DE093JJC	139
DE093KD	135
DE093KDC	140
DE093KK	136
DE093KKC	140
DE093NJ	136
DE093NJC	141
DE093NN	137
DE093NNC	141
DE118BK	133
DE118BKC	137
DE118CC	133
DE118CCC	138
DE118JC	134
DE118JCC	138
DE118JH	134
DE118JHC	139
DE118JJ	135
DE118JJC	139
DE118KD	135
DE118KDC	140
DE118KK	136
DE118KKC	140
DE118NJ	136
DE118NJC	141
DE118NN	137
DE118NNC	141
DE145BK	133
DE145BKC	137
DE145CC	133
DE145CCC	138
DE145JC	134
DE145JCC	138
DE145JH	134
DE145JHC	139
DE145JJ	135
DE145JJC	139
DE145KD	135
DE145KDC	140
DE145KK	136
DE145KKC	140
DE145NJ	136
DE145NJC	141
DE145NN	137
DE145NNC	141
DE175BK	133
DE175BKC	137
DE175CC	133
DE175CCC	138
DE175JC	134
DE175JCC	138
DE175JH	134
DE175JHC	139
DE175JJ	135
DE175JJC	139
DE175KD	135
DE175KDC	140
DE175KK	136
DE175KKC	140
DE175NJ	136
DE175NJC	141
DE175NN	137
DE175NNC	141
DE220BK	133
DE220BKC	137
DE220CC	133
DE220CCC	138
DE220JC	134
DE220JCC	138
DE220JH	134
DE220JHC	139
DE220JJ	135
DE220JJC	139
DE220KD	135
DE220KDC	140
DE220KK	136
DE220KKC	140
DE220NJ	136
DE220NJC	141
DE220NN	137
DE220NNC	141
DE275BK	133
DE275BKC	137
DE275CC	133
DE275CCC	138
DE275JC	134
DE275JCC	138
DE275JH	134
DE275JHC	139
DE275JJ	135
DE275JJC	139
DE275KD	135
DE275KDC	140
DE275KK	136
DE275KKC	140
DE275NJ	136
DE275NJC	141
DE275NN	137
DE275NNC	141
DE330BK	133
DE330BKC	137
DE330CC	133
DE330CCC	138
DE330JC	134
DE330JCC	138
DE330JH	134
DE330JHC	139
DE330JJ	135
DE330JJC	139
DE330KD	135
DE330KDC	140
DE330KK	136
DE330KKC	140
DE330NJ	136
DE330NJC	141
DE330NN	137
DE330NNC	141
DE440BK	133
DE440BKC	137
DE440CC	133
DE440CCC	138
DE440JC	134
DE440JCC	138
DE440JH	134
DE440JHC	139
DE440JJ	135
DE440JJC	139
DE440KD	135
DE440KDC	140
DE440KK	136
DE440KKC	140
DE440NJ	136
DE440NJC	141
DE440NN	137
DE440NNC	141
DE550BK	133
DE550BKC	137
DE550CC	133
DE550CCC	138
DE550JC	134
DE550JCC	138
DE550JH	134
DE550JHC	139
DE550JJ	135
DE550JJC	139
DE550KD	135

© Hammond Power Solutions Inc.

Data subject to change without notice.

ALPHA NUMERIC PART NUMBER INDEX

Catalog Part No.	Catalog Page No.
DE550KDC	140
DE550KK	136
DE550KKC	140
DE550NJ	136
DE550NJC	141
DE550NN	137
DE550NNC	141
DE660BK	133
DE660BKC	137
DE660CC	133
DE660CCC	138
DE660JC	134
DE660JCC	138
DE660JH	134
DE660JHC	139
DE660JJ	135
DE660JJC	139
DE660KD	135
DE660KDC	140
DE660KK	136
DE660KKC	140
DE660NJ	136
DE660NJC	141
DE660NN	137
DE660NNC	141
DM007BK	122
DM007BKCN	126
DM007CC	122
DM007CCCN	127
DM007JC	123
DM007JCCN	127
DM007JH	123
DM007JHCN	128
DM007JJ	124
DM007JJCN	128
DM007KD	124
DM007KDCN	129
DM007KK	125
DM007KKCN	129
DM007NJ	125
DM007NJCN	130
DM007NN	126
DM007NNCN	130
DM011BK	122
DM011BKCN	126
DM011CC	122
DM011CCCN	127
DM011JC	123
DM011JCCN	127
DM011JH	123
DM011JHCN	128
DM011JJ	124
DM011JJCN	128
DM011KD	124
DM011KDCN	129
DM011KK	125
DM011KKCN	129
DM011NJ	125
DM011NJCN	130
DM011NN	126
DM011NNCN	130
DM014BK	122
DM014BKCN	126
DM014CC	122
DM014CCCN	127
DM014JC	123
DM014JCCN	127
DM014JH	123
DM014JHCN	128
DM014JJ	124
DM014JJCN	128
DM014KD	124
DM014KDCN	129
DM014KK	125
DM014KKCN	129
DM014NJ	125
DM014NJCN	130
DM014NN	126
DM014NNCN	130
DM020BK	122
DM020BKC	126
DM020CC	122
DM020CCC	127
DM020JC	123
DM020JCCN	127
DM020JH	123
DM020JHCN	128
DM020JJ	124
DM020JJCN	128
DM020KD	124
DM020KDCN	129
DM020KK	125
DM020KKCN	129
DM020NJ	125
DM020NJCN	130
DM020NN	126
DM020NNCN	130
DM027BK	122
DM027BKC	126
DM027CC	122
DM027CCC	127
DM027JC	123
DM027JCCN	127
DM027JH	123
DM027JHCN	128
DM027JJ	124
DM027JJCN	128
DM027KD	124
DM027KDCN	129
DM027KK	125
DM027KKCN	129
DM027NJ	125
DM027NJCN	130
DM027NN	126
DM027NNCN	130
DM034BK	122
DM034BKC	126
DM034CC	122
DM034CCC	127
DM034JC	123
DM034JCC	127
DM034JH	123
DM034JHC	128
DM034JJ	124
DM034JJC	128
DM034KD	124
DM034KDCN	129
DM034KK	125
DM034KKCN	129
DM034NJ	125
DM034NJCN	130
DM034NN	126
DM034NNCN	130
DM040BK	122
DM040BKC	126
DM040CC	122
DM040CCC	127
DM040JC	123
DM040JCC	127
DM040JH	123
DM040JHC	128
DM040JJ	124
DM040JJC	128
DM040KD	124
DM040KDC	129
DM040KK	125
DM040KKC	129
DM040NJ	125
DM040NJCN	130
DM040NN	126
DM040NNCN	130
DM051BK	122
DM051BKC	126
DM051CC	122
DM051CCC	127
DM051JC	123

© Hammond Power Solutions Inc.

Data subject to change without notice.

ALPHA NUMERIC PART NUMBER INDEX

Catalog Part No.	Catalog Page No.
DM051JCC	127
DM051JH	123
DM051JHC	128
DM051JJ	124
DM051JJC	128
DM051KD	124
DM051KDC	129
DM051KK	125
DM051KKC	129
DM051NJ	125
DM051NJC	130
DM051NN	126
DM051NNC	130
DM063BK	122
DM063BKC	126
DM063CC	122
DM063CCC	127
DM063JC	123
DM063JCC	127
DM063JH	123
DM063JHC	128
DM063JJ	124
DM063JJC	128
DM063KD	124
DM063KDC	129
DM063KK	125
DM063KKC	129
DM063NJ	125
DM063NJC	130
DM063NN	126
DM063NNC	130
DM075BK	122
DM075BKC	126
DM075CC	122
DM075CCC	127
DM075JC	123
DM075JCC	127
DM075JH	123
DM075JHC	128
DM075JJ	124
DM075JJC	128
DM075KD	124
DM075KDC	129
DM075KK	125
DM075KKC	129
DM075NJ	125
DM075NJC	130
DM075NN	126
DM075NNC	130
DM093BK	122
DM093BKC	126
DM093CC	122
DM093CCC	127
DM093JC	123
DM093JCC	127
DM093JH	123
DM093JHC	128
DM093JJ	124
DM093JJC	128
DM093KD	124
DM093KDC	129
DM093KK	125
DM093KKC	129
DM093NJ	125
DM093NJC	130
DM093NN	126
DM093NNC	130
DM118BK	122
DM118BKC	126
DM118CC	122
DM118CCC	127
DM118JC	123
DM118JCC	127
DM118JH	123
DM118JHC	128
DM118JJ	124
DM118JJC	128
DM118KD	124
DM118KDC	129
DM118KK	125
DM118KKC	129
DM118NJ	125
DM118NJC	130
DM118NN	126
DM118NNC	130
DM145BK	122
DM145BKC	126
DM145CC	122
DM145CCC	127
DM145JC	123
DM145JCC	127
DM145JH	123
DM145JHC	128
DM145JJ	124
DM145JJC	128
DM145KD	124
DM145KDC	129
DM145KK	125
DM145KKC	129
DM145NJ	125
DM145NJC	130
DM145NN	126
DM145NNC	130
DM175BK	122
DM175BKC	126
DM175CC	122
DM175CCC	127
DM175JC	123
DM175JCC	127
DM175JH	123
DM175JHC	128
DM175JJ	124
DM175JJC	128
DM175KD	124
DM175KDC	129
DM175KK	125
DM175KKC	129
DM175NJ	125
DM175NJC	130
DM175NN	126
DM175NNC	130
DM220BK	122
DM220BKC	126
DM220CC	122
DM220CCC	127
DM220JC	123
DM220JCC	127
DM220JH	123
DM220JHC	128
DM220JJ	124
DM220JJC	128
DM220KD	124
DM220KDC	129
DM220KK	125
DM220KKC	129
DM220NJ	125
DM220NJC	130
DM220NN	126
DM220NNC	130
DM275BK	122
DM275BKC	126
DM275CC	122
DM275CCC	127
DM275JC	123
DM275JCC	127
DM275JH	123
DM275JHC	128
DM275JJ	124
DM275JJC	128
DM275KD	124
DM275KDC	129
DM275KK	125
DM275KKC	129
DM275NJ	125
DM275NJC	130
DM275NN	126

© Hammond Power Solutions Inc.

Data subject to change without notice.

ALPHA NUMERIC PART NUMBER INDEX

Catalog Part No.	Catalog Page No.
DM275NNC	130
DM330BK	122
DM330BKC	126
DM330CC	122
DM330CCC	127
DM330JC	123
DM330JCC	127
DM330JH	123
DM330JHC	128
DM330JJ	124
DM330JJC	128
DM330KD	124
DM330KDC	129
DM330KK	125
DM330KKC	129
DM330NJ	125
DM330NJC	130
DM330NN	126
DM330NNC	130
DM440BK	122
DM440BKC	126
DM440CC	122
DM440CCC	127
DM440JC	123
DM440JCC	127
DM440JH	123
DM440JHC	128
DM440JJ	124
DM440JJC	128
DM440KD	124
DM440KDC	129
DM440KK	125
DM440KKC	129
DM440NJ	125
DM440NJC	130
DM440NN	126
DM440NNC	130
DM550BK	122
DM550BKC	126
DM550CC	122
DM550CCC	127
DM550JC	123
DM550JCC	127
DM550JH	123
DM550JHC	128
DM550JJ	124
DM550JJC	128
DM550KD	124
DM550KDC	129
DM550KK	125
DM550KKC	129
DM550NJ	125
DM550NJC	130
DM550NN	126
DM550NNC	130
DM660BK	122
DM660BKC	126
DM660CC	122
DM660CCC	127
DM660JC	123
DM660JCC	127
DM660JH	123
DM660JHC	128
DM660JJ	124
DM660JJC	128
DM660KD	124
DM660KDC	129
DM660KK	125
DM660KKC	129
DM660NJ	125
DM660NJC	130
DM660NN	126
DM660NNC	130
FG1	45
FG2	45
FG3	45
FG4	45
FG5	45
FGF1	45
FGF2	45
FS1000ACP	56
FS1000KHP	58
FS1000MQMJ	57
FS1000NJ	59
FS1000SP	60
FS100ACP	56
FS100AR	56
FS100KHP	58
FS100KHR	58
FS100MQMJ	57
FS100NJ	59
FS100PR	59
FS100QR	57
FS100SP	60
FS100SR	60
FS1500ACP	56
FS1500KHP	58
FS1500MQMJ	57
FS1500NJ	59
FS1500SP	60
FS150ACP	56
FS150AR	56
FS150KHP	58
FS150KHR	58
FS150MQMJ	57
FS150NJ	59
FS150PR	59
FS150QR	57
FS150SP	60
FS150SR	60
FS2000ACP	56
FS2000MQMJ	57
FS250ACP	56
FS250AR	56
FS250KHP	58
FS250KHR	58
FS250MQMJ	57
FS250NJ	59
FS250PR	59
FS250QR	57
FS250SP	60
FS250SR	60
FS3000ACP	56
FS3000MQMJ	57
FS350ACP	56
FS350AR	56
FS350KHP	58
FS350KHR	58
FS350MQMJ	57
FS350NJ	59
FS350PR	59
FS350QR	57
FS350SP	60
FS350SR	60
FS5000ACP	56
FS5000MQMJ	57
FS500ACP	56
FS500AR	56
FS500KHP	58
FS500KHR	58
FS500MQMJ	57
FS500NJ	59
FS500PR	59
FS500QR	57
FS500SP	60
FS500SR	60
FS50ACP	56
FS50AR	56
FS50KHP	58
FS50KHR	58
FS50MQMJ	57
FS50NJ	59
FS50PR	59
FS50QR	57
FS50SP	60
FS50SR	60

© Hammond Power Solutions Inc.

Data subject to change without notice.

ALPHA NUMERIC PART NUMBER INDEX

Catalog Part No.	Catalog Page No.
FS750ACP	56
FS750KHP	58
FS750MQMJ	57
FS750NJ	59
FS750SP	60
FSFH1	61
H1EM015BB00	209
H1EM015BB00S	205
H1EM015BB30	211
H1EM015BB30S	207
H1EM015BK00	209
H1EM015BK00S	205
H1EM015BK30	211
H1EM015BK30S	207
H1EM015KB00	209
H1EM015KB00S	205
H1EM015KB30	211
H1EM015KB30S	207
H1EM015KK00	210
H1EM015KK00S	206
H1EM015KK30	212
H1EM015KK30S	208
H1EM015PB00	210
H1EM015PB00S	206
H1EM015PB30	212
H1EM015PB30S	208
H1EM015PK00	210
H1EM015PK00S	206
H1EM015PK30	212
H1EM015PK30S	208
H1EM030BB00	209
H1EM030BB00S	205
H1EM030BB30	211
H1EM030BB30S	207
H1EM030BK00	209
H1EM030BK00S	205
H1EM030BK30	211
H1EM030BK30S	207
H1EM030KB00	209
H1EM030KB00S	205
H1EM030KB30	211
H1EM030KB30S	207
H1EM030KK00	210
H1EM030KK00S	206
H1EM030KK30	212
H1EM030KK30S	208
H1EM030PB00	210
H1EM030PB00S	206
H1EM030PB30	212
H1EM030PB30S	208
H1EM030PK00	210
H1EM030PK00S	206
H1EM030PK30	212
H1EM030PK30S	208
H1EM045BB00	209
H1EM045BB00S	205
H1EM045BB30	211
H1EM045BB30S	207
H1EM045BK00	209
H1EM045BK00S	205
H1EM045BK30	211
H1EM045BK30S	207
H1EM045KB00	209
H1EM045KB00S	205
H1EM045KB30	211
H1EM045KB30S	207
H1EM045KK00	210
H1EM045KK00S	206
H1EM045KK30	212
H1EM045KK30S	208
H1EM045PB00	210
H1EM045PB00S	206
H1EM045PB30	212
H1EM045PB30S	208
H1EM045PK00	210
H1EM045PK00S	206
H1EM045PK30	212
H1EM045PK30S	208
H1EM075BB00	209
H1EM075BB00S	205
H1EM075BB30	211
H1EM075BB30S	207
H1EM075BK00	209
H1EM075BK00S	205
H1EM075BK30	211
H1EM075BK30S	207
H1EM075KB00	209
H1EM075KB00S	205
H1EM075KB30	211
H1EM075KB30S	207
H1EM075KK00	210
H1EM075KK00S	206
H1EM075KK30	212
H1EM075KK30S	208
H1EM075PB00	210
H1EM075PB00S	206
H1EM075PB30	212
H1EM075PB30S	208
H1EM075PK00	210
H1EM075PK00S	206
H1EM075PK30	212
H1EM075PK30S	208
H1EM112BB00	209
H1EM112BB00S	205
H1EM112BB30	211
H1EM112BB30S	207
H1EM112BK00	209
H1EM112BK00S	205
H1EM112BK30	211
H1EM112BK30S	207
H1EM112KB00	209
H1EM112KB00S	205
H1EM112KB30	211
H1EM112KB30S	207
H1EM112KK00	210
H1EM112KK00S	206
H1EM112KK30	212
H1EM112KK30S	208
H1EM112PB00	210
H1EM112PB00S	206
H1EM112PB30	212
H1EM112PB30S	208
H1EM112PK00	210
H1EM112PK00S	206
H1EM112PK30	212
H1EM112PK30S	208
H1EM150BB00	209
H1EM150BB00S	205
H1EM150BB30	211
H1EM150BB30S	207
H1EM150BK00	209
H1EM150BK00S	205
H1EM150BK30	211
H1EM150BK30S	207
H1EM150KB00	209
H1EM150KB00S	205
H1EM150KB30	211
H1EM150KB30S	207
H1EM150KK00	210
H1EM150KK00S	206
H1EM150KK30	212
H1EM150KK30S	208
H1EM150PB00	210
H1EM150PB00S	206
H1EM150PB30	212
H1EM150PB30S	208
H1EM150PK00	210
H1EM150PK00S	206
H1EM150PK30	212
H1EM150PK30S	208
H1EM225BB00	209
H1EM225BB00S	205
H1EM225BB30	211
H1EM225BB30S	207
H1EM225BK00	209
H1EM225BK00S	205

© Hammond Power Solutions Inc.

Data subject to change without notice.

ALPHA NUMERIC PART NUMBER INDEX

Catalog Part No.	Catalog Page No.
H1EM225BK30	211
H1EM225BK30S	207
H1EM225KB00	209
H1EM225KB00S	205
H1EM225KB30	211
H1EM225KB30S	207
H1EM225KK00	210
H1EM225KK00S	206
H1EM225KK30	212
H1EM225KK30S	208
H1EM225PB00	210
H1EM225PB00S	206
H1EM225PB30	212
H1EM225PB30S	208
H1EM225PK00	210
H1EM225PK00S	206
H1EM225PK30	212
H1EM225PK30S	208
H1EM300BB00	209
H1EM300BB00S	205
H1EM300BB30	211
H1EM300BB30S	207
H1EM300BK00	209
H1EM300BK00S	205
H1EM300BK30	211
H1EM300BK30S	207
H1EM300KB00	209
H1EM300KB00S	205
H1EM300KB30	211
H1EM300KB30S	207
H1EM300KK00	210
H1EM300KK00S	206
H1EM300KK30	212
H1EM300KK30S	208
H1EM300PB00	210
H1EM300PB00S	206
H1EM300PB30	212
H1EM300PB30S	208
H1EM300PK00	210
H1EM300PK00S	206
H1EM300PK30	212
H1EM300PK30S	208
H1EM500BB00	209
H1EM500BB00S	205
H1EM500BB30	211
H1EM500BB30S	207
H1EM500BK00	209
H1EM500BK00S	205
H1EM500BK30	211
H1EM500BK30S	207
H1EM500KB00	209
H1EM500KB00S	205
H1EM500KB30	211
H1EM500KB30S	207
H1EM500KK00	210
H1EM500KK00S	206
H1EM500KK30	212
H1EM500KK30S	208
H1EM500PB00	210
H1EM500PB00S	206
H1EM500PB30	212
H1EM500PB30S	208
H1EM500PK00	210
H1EM500PK00S	206
H1EM500PK30	212
H1EM500PK30S	208
H1EM750BB00	209
H1EM750BB00S	205
H1EM750BB30	211
H1EM750BB30S	207
H1EM750BK00	209
H1EM750BK00S	205
H1EM750BK30	211
H1EM750BK30S	207
H1EM750KB00	209
H1EM750KB00S	205
H1EM750KB30	211
H1EM750KB30S	207
H1EM750KK00	210
H1EM750KK00S	206
H1EM750KK30	212
H1EM750KK30S	208
H1EM750PB00	210
H1EM750PB00S	206
H1EM750PB30	212
H1EM750PB30S	208
H1EM750PK00	210
H1EM750PK00S	206
H1EM750PK30	212
H1EM750PK30S	208
M1PC005LESF	244
M1PC005LESF7	244
M1PC007LESF	244
M1PC007LESF7	244
M1PC010LESF	244
M1PC010LESF7	244
M1PC015LESF	244
M1PC015LESF7	244
M1PC025LESF	244
M1PC025LESF7	244
MV1S015RECF	254
MV1S015REAF	253
MV1S015SECF	254
MV1S015SEAF	253
MV1S025RECF	254
MV1S025RE	253
MV1S025SECF	254
MV1S025SEAF	253
MV1S037RE	253
MV1S037RECF	254
MV1S037SECF	254
MV1S037SE	253
MV1S050RE	253
MV1S050RECF	254
MV1S050SE	253
MV1S050SECF	254
MV1S075RE	253
MV1S075REC	254
MV1S075SE	253
MV1S075SEC	254
MV1S100RE	253
MV1S100REC	254
MV1S100SE	253
MV1S100SEC	254
MV1S150RE	253
MV1S150REC	254
MV1S150SE	253
MV1S150SEC	254
MV1S167RE	253
MV1S167REC	254
MV1S167SE	253
MV1S167SEC	254
MV1S250RE	253
MV1S250REC	254
MV1S250SE	253
MV1S250SEC	254
MV1S333RE	253
MV1S333REC	254
MV1S333SE	253
MV1S333SEC	254
MV3S015RBCF	257
MV3S015RB	255
MV3S015RKCF	257
MV3S015RK	255
MV3S015RPCF	257
MV3S015RP	255
MV3S015SBCF	258
MV3S015SB	256
MV3S015SKCF	258
MV3S015SK	256
MV3S015SPCF	258
MV3S015SP	256
MV3S030RBCF	257
MV3S030RB	255
MV3S030RKCF	257
MV3S030RK	255

© Hammond Power Solutions Inc.

Data subject to change without notice.

ALPHA NUMERIC PART NUMBER INDEX

Catalog Part No.	Catalog Page No.
MV3S030RPCF	257
MV3S030RP	255
MV3S030SBCF	258
MV3S030SB	256
MV3S030SKCF	258
MV3S030SK	256
MV3S030SPCF	258
MV3S030SP	256
MV3S045RBCF	257
MV3S045RBAF	255
MV3S045RKCF	257
MV3S045RKAF	255
MV3S045RPCF	257
MV3S045RPAF	255
MV3S045SBCF	258
MV3S045SBAF	256
MV3S045SKCF	258
MV3S045SKAF	256
MV3S045SPCF	258
MV3S045SPAF	256
MV3S075RBCF	257
MV3S075RB	255
MV3S075RKCF	257
MV3S075RK	255
MV3S075RPCF	257
MV3S075RP	255
MV3S075SBCF	258
MV3S075SBAF	256
MV3S075SKCF	258
MV3S075SKAF	256
MV3S075SPCF	258
MV3S075SPAF	256
MV3S1000RB	255
MV3S1000RBC	257
MV3S1000RK	255
MV3S1000RKC	257
MV3S1000RP	255
MV3S1000RPC	257
MV3S1000SB	256
MV3S1000SBC	258
MV3S1000SK	256
MV3S1000SKC	258
MV3S1000SP	256
MV3S1000SPC	258
MV3S112RB	255
MV3S112RBCF	257
MV3S112RK	255
MV3S112RKCF	257
MV3S112RP	255
MV3S112RPCF	257
MV3S112SBCF	258
MV3S112SBF	256
MV3S112SKCF	258
MV3S112SKF	256
MV3S112SPCF	258
MV3S112SPF	256
MV3S1250RB	255
MV3S1250RBC	257
MV3S1250RK	255
MV3S1250RKC	257
MV3S1250RP	255
MV3S1250RPC	257
MV3S1250SB	256
MV3S1250SBC	258
MV3S1250SK	256
MV3S1250SKC	258
MV3S1250SP	256
MV3S1250SPC	258
MV3S1500RB	255
MV3S1500RBC	257
MV3S1500RK	255
MV3S1500RKC	257
MV3S1500RP	255
MV3S1500RPC	257
MV3S1500SB	256
MV3S1500SBC	258
MV3S1500SK	256
MV3S1500SKC	258
MV3S1500SP	256
MV3S1500SPC	258
MV3S150RB	255
MV3S150RBC	257
MV3S150RK	255
MV3S150RKC	257
MV3S150RP	255
MV3S150RPC	257
MV3S150SB	256
MV3S150SBCF	258
MV3S150SK	256
MV3S150SKCF	258
MV3S150SP	256
MV3S150SPCF	258
MV3S225RB	255
MV3S225RBC	257
MV3S225RK	255
MV3S225RKC	257
MV3S225RP	255
MV3S225RPC	257
MV3S225SB	256
MV3S225SBC	258
MV3S225SK	256
MV3S225SKC	258
MV3S225SP	256
MV3S225SPC	258
MV3S300RB	255
MV3S300RBC	257
MV3S300RK	255
MV3S300RKC	257
MV3S300RP	255
MV3S300RPC	257
MV3S300SB	256
MV3S300SBC	258
MV3S300SK	256
MV3S300SKC	258
MV3S300SP	256
MV3S300SPC	258
MV3S500RB	255
MV3S500RBC	257
MV3S500RK	255
MV3S500RKC	257
MV3S500RP	255
MV3S500RPC	257
MV3S500SB	256
MV3S500SBC	258
MV3S500SK	256
MV3S500SKC	258
MV3S500SP	256
MV3S500SPC	258
MV3S750RB	255
MV3S750RBC	257
MV3S750RK	255
MV3S750RKC	257
MV3S750RP	255
MV3S750RPC	257
MV3S750SB	256
MV3S750SBC	258
MV3S750SK	256
MV3S750SKC	258
MV3S750SP	256
MV3S750SPC	258
N1	264
N2	264
NH3	260
NH3-N12	266
NH3-N3RE	265
NH3-N4	266
NH4	260
NH4-N12	266
NH4-N3RE	265
NH4-N4	266
NH5	260
NH5DP	272
NH5-N12	266
NH5-N4	266
NH6	260
NH6DP	272

© Hammond Power Solutions Inc.

Data subject to change without notice.

ALPHA NUMERIC PART NUMBER INDEX

Catalog Part No.	Catalog Page No.
NH6-N12	266
NH6-N4	266
NJ1	261
NJ1-N12	267
NJ1-N3RE	265
NJ1-N4	267
NJ2	261
NJ2-N3RE	265
NJ3	261
NJ3-N3RE	265
NJ4	261
NJ6	261
NJ6-N3RE	265
NJ7	261
NJ7-N3RE	265
NMF015BE	161
NMF015BEC	163
NMF015FE	161
NMF015FEC	163
NMF015HE	162
NMF015HEC	164
NMF015LE	161
NMF015LEC	163
NMF015PE	162
NMF015PEC	164
NMF015XE	162
NMF015XEC	164
NMF025BE	161
NMF025BEC	163
NMF025FE	161
NMF025FEC	163
NMF025HE	162
NMF025HEC	164
NMF025LE	161
NMF025LEC	163
NMF025PE	162
NMF025PEC	164
NMF025XE	162
NMF025XEC	164
NMF037BE	161
NMF037BEC	163
NMF037FE	161
NMF037FEC	163
NMF037HE	162
NMF037HEC	164
NMF037LE	161
NMF037LEC	163
NMF037PE	162
NMF037PEC	164
NMF037XE	162
NMF037XEC	164
NMF050BE	161
NMF050BEC	163
NMF050FE	161
NMF050FEC	163
NMF050HE	162
NMF050HEC	164
NMF050LE	161
NMF050LEC	163
NMF050PE	162
NMF050PEC	164
NMF050XE	162
NMF050XEC	164
NMF075BE	161
NMF075BEC	163
NMF075FE	161
NMF075FEC	163
NMF075HE	162
NMF075HEC	164
NMF075LE	161
NMF075LEC	163
NMF075PE	162
NMF075PEC	164
NMF075XE	162
NMF075XEC	164
NMF100BE	161
NMF100BEC	163
NMF100FE	161
NMF100FEC	163
NMF100HE	162
NMF100HEC	164
NMF100LE	161
NMF100LEC	163
NMF100PE	162
NMF100PEC	164
NMF100XE	162
NMF100XEC	164
NMF150BE	161
NMF150BEC	163
NMF150FE	161
NMF150FEC	163
NMF150HE	162
NMF150HEC	164
NMF150LE	161
NMF150LEC	163
NMF150PE	162
NMF150PEC	164
NMF150XE	162
NMF150XEC	164
NMF167BE	161
NMF167BEC	163
NMF167FE	161
NMF167FEC	163
NMF167HE	162
NMF167HEC	164
NMF167LE	161
NMF167LEC	163
NMF167PE	162
NMF167PEC	164
NMF167XE	162
NMF167XEC	164
NMK015BB	166
NMK015BBCN	170
NMK015BK	166
NMK015BKCN	170
NMK015DB	166
NMK015DBCN	170
NMK015DK	167
NMK015DKCN	171
NMK015KB	167
NMK015KBCN	171
NMK015KD	167
NMK015KDCN	171
NMK015KK	168
NMK015KKCN	172
NMK015PB	168
NMK015PBCN	172
NMK015PD	168
NMK015PDCN	172
NMK015PK	169
NMK015PKCN	173
NMK030BB	166
NMK030BBC	170
NMK030BK	166
NMK030BKC	170
NMK030DB	166
NMK030DBC	170
NMK030DK	167
NMK030DKC	171
NMK030KB	167
NMK030KBCN	171
NMK030KD	167
NMK030KDCN	171
NMK030KK	168
NMK030KKCN	172
NMK030PB	168
NMK030PBCN	172
NMK030PD	168
NMK030PDC	172
NMK030PK	169
NMK030PKCN	173
NMK045BB	166
NMK045BBC	170
NMK045BK	166
NMK045BKC	170
NMK045DB	166

© Hammond Power Solutions Inc.

Data subject to change without notice.

ALPHA NUMERIC PART NUMBER INDEX

Catalog Part No.	Catalog Page No.
NMK045DBC	170
NMK045DK	167
NMK045DKC	171
NMK045KB	167
NMK045KBC	171
NMK045KD	167
NMK045KDC	171
NMK045KK	168
NMK045KKC	172
NMK045PB	168
NMK045PBC	172
NMK045PD	168
NMK045PDC	172
NMK045PK	169
NMK045PKC	173
NMK075BB	166
NMK075BBC	170
NMK075BK	166
NMK075BKC	170
NMK075DB	166
NMK075DBC	170
NMK075DK	167
NMK075DKC	171
NMK075KB	167
NMK075KBC	171
NMK075KD	167
NMK075KDC	171
NMK075KK	168
NMK075KKC	172
NMK075PB	168
NMK075PBC	172
NMK075PD	168
NMK075PDC	172
NMK075PK	169
NMK075PKC	173
NMK112BB	166
NMK112BBC	170
NMK112BK	166
NMK112BKC	170
NMK112DB	166
NMK112DBC	170
NMK112DK	167
NMK112DKC	171
NMK112KB	167
NMK112KBC	171
NMK112KD	167
NMK112KDC	171
NMK112KK	168
NMK112KKC	172
NMK112PB	168
NMK112PBC	172
NMK112PD	168
NMK112PDC	172
NMK112PK	169
NMK112PKC	173
NMK150BB	166
NMK150BBC	170
NMK150BK	166
NMK150BKC	170
NMK150DB	166
NMK150DBC	170
NMK150DK	167
NMK150DKC	171
NMK150KB	167
NMK150KBC	171
NMK150KD	167
NMK150KDC	171
NMK150KK	168
NMK150KKC	172
NMK150PB	168
NMK150PBC	172
NMK150PD	168
NMK150PDC	172
NMK150PK	169
NMK150PKC	173
NMK225BB	166
NMK225BBC	170
NMK225BK	166
NMK225BKC	170
NMK225DB	166
NMK225DBC	170
NMK225DK	167
NMK225DKC	171
NMK225KB	167
NMK225KBC	171
NMK225KD	167
NMK225KDC	171
NMK225KK	168
NMK225KKC	172
NMK225PB	168
NMK225PBC	172
NMK225PD	168
NMK225PDC	172
NMK225PK	169
NMK225PKC	173
NMK300BB	166
NMK300BBC	170
NMK300BK	166
NMK300BKC	170
NMK300DB	166
NMK300DBC	170
NMK300DK	167
NMK300DKC	171
NMK300KB	167
NMK300KBC	171
NMK300KD	167
NMK300KDC	171
NMK300KK	168
NMK300KKC	172
NMK300PB	168
NMK300PBC	172
NMK300PD	168
NMK300PDC	172
NMK300PK	169
NMK300PKC	173
NMK500BB	166
NMK500BBC	170
NMK500BK	166
NMK500BKC	170
NMK500DB	166
NMK500DBC	170
NMK500DK	167
NMK500DKC	171
NMK500KB	167
NMK500KBC	171
NMK500KD	167
NMK500KDC	171
NMK500KK	168
NMK500KKC	172
NMK500PB	168
NMK500PBC	172
NMK500PD	168
NMK500PDC	172
NMK500PK	169
NMK500PKC	173
NMK750BB	166
NMK750BBC	170
NMK750BK	166
NMK750BKC	170
NMK750DB	166
NMK750DBC	170
NMK750DK	167
NMK750DKC	171
NMK750KB	167
NMK750KBC	171
NMK750KD	167
NMK750KDC	171
NMK750KK	168
NMK750KKC	172
NMK750PB	168
NMK750PBC	172
NMK750PD	168
NMK750PDC	172
NMK750PK	169
NMK750PKC	173
NMP1	273

© Hammond Power Solutions Inc.

Data subject to change without notice.

ALPHA NUMERIC PART NUMBER INDEX

Catalog Part No.	Catalog Page No.
NMP2	273
NMP3	273
NMP4	273
NMP5	273
NMP6	273
NMP7	273
NMT04K015KBKF	193
NMT04K015KBS	193
NMT04K015PBKF	193
NMT04K015PBS	193
NMT04K030KBKN	193
NMT04K030KBS	193
NMT04K030PBKN	193
NMT04K030PBS	193
NMT04K045KBK	193
NMT04K045KBS	193
NMT04K045PBK	193
NMT04K045PBS	193
NMT04K075KBK	193
NMT04K075KBS	193
NMT04K075PBK	193
NMT04K075PBS	193
NMT04K112KBK	193
NMT04K112KBS	193
NMT04K112PBK	193
NMT04K112PBS	193
NMT04K150KBK	193
NMT04K150KBS	193
NMT04K150PBK	193
NMT04K150PBS	193
NMT04K225KBK	193
NMT04K225KBS	193
NMT04K225PBK	193
NMT04K225PBS	193
NMT04K300KBK	193
NMT04K300KBS	193
NMT04K300PBK	193
NMT04K300PBS	193
NMT04K500KBK	193
NMT04K500KBS	193
NMT04K500PBK	193
NMT04K500PBS	193
NMT04K750KBK	193
NMT04K750KBS	193
NMT04K750PBK	193
NMT04K750PBS	193
NMT13K015KBKF	194
NMT13K015KBS	194
NMT13K015PBKF	194
NMT13K015PBS	194
NMT13K030KBKN	194
NMT13K030KBS	194
NMT13K030PBKN	194
NMT13K030PBS	194
NMT13K045KBK	194
NMT13K045KBS	194
NMT13K045PBK	194
NMT13K045PBS	194
NMT13K075KBK	194
NMT13K075KBS	194
NMT13K075PBK	194
NMT13K075PBS	194
NMT13K112KBK	194
NMT13K112KBS	194
NMT13K112PBK	194
NMT13K112PBS	194
NMT13K150KBK	194
NMT13K150KBS	194
NMT13K150PBK	194
NMT13K150PBS	194
NMT13K225KBK	194
NMT13K225KBS	194
NMT13K225PBK	194
NMT13K225PBS	194
NMT13K300KBK	194
NMT13K300KBS	194
NMT13K300PBK	194
NMT13K300PBS	194
NMT13K500KBK	194
NMT13K500KBS	194
NMT13K500PBK	194
NMT13K500PBS	194
NMT13K750KBK	194
NMT13K750KBS	194
NMT13K750PBK	194
NMT13K750PBS	194
NMT20K015KBKF	195
NMT20K015KBS	195
NMT20K015PBKF	195
NMT20K015PBS	195
NMT20K030KBK	195
NMT20K030KBS	195
NMT20K030PBKN	195
NMT20K030PBS	195
NMT20K045KBK	195
NMT20K045KBS	195
NMT20K045PBK	195
NMT20K045PBS	195
NMT20K075KBK	195
NMT20K075KBS	195
NMT20K075PBK	195
NMT20K075PBS	195
NMT20K112KBK	195
NMT20K112KBS	195
NMT20K112PBK	195
NMT20K112PBS	195
NMT20K150KBK	195
NMT20K150KBS	195
NMT20K150PBK	195
NMT20K150PBS	195
NMT20K225KBK	195
NMT20K225KBS	195
NMT20K225PBK	195
NMT20K225PBS	195
NMT20K300KBK	195
NMT20K300KBS	195
NMT20K300PBK	195
NMT20K300PBS	195
NMT20K500KBK	195
NMT20K500KBS	195
NMT20K500PBK	195
NMT20K500PBS	195
NMT20K750KBK	195
NMT20K750KBS	195
NMT20K750PBK	195
NMT20K750PBS	195
NQ0	262
NQ1	262
NQ2	262
NQ3	262
NQ4	262
NQ5	262
NQ6	262
NQ6A	262
NQ7	262
NQ8	262
NQS10	263
NQT10	263
NQT10GK	274
NQT11	263
NQT11GK	274
NQT2	263
NQT2GK	274
NQT3	263
NQT3GK	274
NQT4	263
NQT4GK	274
NQT5	263
NQT5GK	274
NQT6	263
NQT6GK	274
NQT7	263
NQT7GK	274
NQT8	263
NQT8GK	274
NQT9	263

© Hammond Power Solutions Inc.

Data subject to change without notice.

ALPHA NUMERIC PART NUMBER INDEX

Catalog Part No.	Catalog Page No.
NQT9A	263
NQT9AGK	274
NQT9GK	274
NQTW1	273
NQTW2	273
NW2	271, 272
P002KBKB	239
P002KDKB	239
P002PBKB	239
P002PDKB	240
P002QKKB	240
P003KBKB	239
P003KDKB	239
P003PBKB	239
P003PDKB	240
P003QKKB	240
P006KBKF	239
P006KDKF	239
P006PBKF	239
P006PDKF	240
P006QKKF	240
P009KBKF	239
P009KDKF	239
P009PBKF	239
P009PDKF	240
P009QKKF	240
P015KBKF	239
P015KDKF	239
P015PBKF	239
P015PDKF	240
P015QKKF	240
P030KBKF	239
P030KDKF	239
P030PBKF	239
P030PDKF	240
P030QKKF	240
P045KBKF	239
P045KDKF	239
P045PBKF	239
P045PDKF	240
P045QKKF	240
P075KBKF	239
P075KDKF	239
P075PBKF	239
P075PDKF	240
P075QKKF	240
P1	273
P112KBKF	239
P112KDKF	239
P112PBKF	239
P112PDKF	240
P112QKKF	240
P150KBKF	239
P150KDKF	239
P150PBKF	239
P150PDKF	240
P150QKKF	240
P2	273
PFK1	44
PFK2	44
PFK3	44
PFK4	44
PFK5	44
PFK6	44
PFK7	44
PH1000AJ	38
PH1000MBMH	41
PH1000MEMX	42
PH1000MGJ	43
PH1000MLI	42
PH1000MQMJ	39
PH1000PG	41
PH1000PP	40
PH1000SP	40
PH100AJ	38
PH100AR	38
PH100MBMH	41
PH100MEMX	42
PH100MGJ	43
PH100MLI	42
PH100MQMJ	39
PH100PG	41
PH100PP	40
PH100QR	39
PH100SP	40
PH1500AJ	38
PH1500MBMH	41
PH1500MQMJ	39
PH1500PP	40
PH150AJ	38
PH150AR	38
PH150MBMH	41
PH150MEMX	42
PH150MGJ	43
PH150MLI	42
PH150MQMJ	39
PH150PG	41
PH150PP	40
PH150QR	39
PH150SP	40
PH250AJ	38
PH250AR	38
PH250MBMH	41
PH250MEMX	42
PH250MGJ	43
PH250MLI	42
PH250MQMJ	39
PH250PG	41
PH250PP	40
PH250QR	39
PH250SP	40
PH350AJ	38
PH350AR	38
PH350MBMH	41
PH350MEMX	42
PH350MGJ	43
PH350MLI	42
PH350MQMJ	39
PH350PG	41
PH350PP	40
PH350QR	39
PH350SP	40
PH500AJ	38
PH500AR	38
PH500MBMH	41
PH500MEMX	42
PH500MGJ	43
PH500MLI	42
PH500MQMJ	39
PH500PG	41
PH500PP	40
PH500QR	39
PH500SP	40
PH50AJ	38
PH50AR	38
PH50MBMH	41
PH50MEMX	42
PH50MGJ	43
PH50MLI	42
PH50MQMJ	39
PH50PG	41
PH50PP	40
PH50QR	39
PH50SP	40
PH750AJ	38
PH750MBMH	41
PH750MEMX	42
PH750MGJ	43
PH750MLI	42
PH750MQMJ	39
PH750PG	41
PH750PP	40
PH750SP	40
PH75AJ	38
PH75AR	38
PH75MBMH	41

© Hammond Power Solutions Inc.

Data subject to change without notice.

ALPHA NUMERIC PART NUMBER INDEX

Catalog Part No.	Catalog Page No.
PH75MEMX	42
PH75MGJ	43
PH75MLI	42
PH75MQMJ	39
PH75PG	41
PH75PP	40
PH75QR	39
PH75SP	40
PPE1	268
PPE2	268
PPE3	269
PPE4	269
PPE5	270
Q002DTCF	86,89,152
Q002ERCF	84,87,151
Q002ESCF	85,88,151
Q002FEKF	236
Q002LEKF	236
Q002PEKF	237
Q002PRCF	63
Q002XEKF	237
Q002YEKF	236
Q003DTCF	86,89,152
Q003ERCF	84,87,151
Q003ESCF	85,88,151
Q003FEKF	236
Q003LEKF	236
Q003PEKF	237
Q003PRCF	63
Q003XEKF	237
Q003YEKF	236
Q005DTCF	86,89,152
Q005ERCF	84,87,151
Q005ESCF	85,88,151
Q005FEKF	236
Q005LEKF	236
Q005PEKF	237
Q005PRCF	63
Q005XEKF	237
Q005YEKF	236
Q007FEKF	236
Q007LEKF	236
Q007PEKF	237
Q007XEKF	237
Q007YEKF	236
Q010FEKF	236
Q010LEKF	236
Q010PEKF	237
Q010XEKF	237
Q010YEKF	236
Q015FEKF	236
Q015LEKF	236
Q015PEKF	237
Q015XEKF	237
Q015YEKF	236
Q025FEKF	236
Q025LEKF	236
Q025PEKF	237
Q025XEKF	237
Q025YEKF	236
Q037FEKF	236
Q037LEKF	236
Q037PEKF	237
Q037XEKF	237
Q037YEKF	236
Q1C0DTCB	86,89,152
Q1C0ERCB	84,87,151
Q1C0ESCB	85,88,151
Q1C0FEKB	236
Q1C0LEKB	236
Q1C0PEKB	237
Q1C0PRCB	63
Q1C0XEKB	237
Q1C0YEKB	236
Q1C5DTCF	86,89,152
Q1C5ERCF	84,87,151
Q1C5ESCF	85,88,151
Q1C5FEKF	236
Q1C5LEKF	236
Q1C5PEKF	237
Q1C5PRCF	63
Q1C5XEKF	237
Q1C5YEKF	236
QC05DTCB	86,89,152
QC05ERCB	84,87,151
QC05ESCB	85,88,151
QC05PRCB	63
QC10DTCB	86,89,152
QC10ERCB	84,87,151
QC10ESCB	85,88,151
QC10PRCB	63
QC15DTCB	86,89,152
QC15ERCB	84,87,151
QC15ESCB	85,88,151
QC15PRCB	63
QC20DTCB	86,89,152
QC20ERCB	84,87,151
QC20ESCB	85,88,151
QC20PRCB	63
QC25DTCB	86,89,152
QC25ERCB	84,87,151
QC25ESCB	85,88,151
QC25PRCB	63
QC35DTCB	86,89,152
QC35ERCB	84,87,151
QC35ESCB	85,88,151
QC35PRCB	63
QC50DTCB	86,89,152
QC50ERCB	84,87,151
QC50ESCB	85,88,151
QC50FECB	236
QC50LECB	236
QC50PECB	237
QC50PRCB	63
QC50XECB	237
QC50YECB	236
QC75DTCB	86,89,152
QC75ERCB	84,87,151
QC75ESCB	85,88,151
QC75FEKB	236
QC75LEKB	236
QC75PEKB	237
QC75PRCB	63
QC75XEKB	237
QC75YEKB	236
RC0002M12	116
RC0004N65	116
RC0008N30	116
RC0012N25	116
RC0018N15	116
RC0025N12	116
RC0035P80	116
RC0045P70	116
RC0055P50	116
RC0080P40	116
RC0110P30	116
RC0130P20	116
RC0160P15	116
RC0200P11	116
RC0250U90	116
RC0320U75	116
RC0400U61	116
RC0500U50	116
RC0600U40	116
RM0002M12	108
RM0002M12E	110
RM0002M20	108
RM0002M20E	110
RM0002M32	108
RM0002M32E	110
RM0004M12	108
RM0004M12E	110
RM0004M22	108
RM0004M22E	110
RM0004N30	108
RM0004N30E	110

© Hammond Power Solutions Inc.

Data subject to change without notice.

ALPHA NUMERIC PART NUMBER INDEX

Catalog Part No.	Catalog Page No.
RM0004N65	108
RM0004N65E	110
RM0004N91	108
RM0004N91E	110
RM0008N15	108
RM0008N15E	110
RM0008N30	108
RM0008N30E	110
RM0008N50	108
RM0008N50E	110
RM0008N75	108
RM0008N75E	110
RM0012N13	108
RM0012N13E	110
RM0012N25	108
RM0012N25E	110
RM0012N31	108
RM0012N31E	110
RM0012N42	108
RM0012N42E	110
RM0012N51	108
RM0012N51E	110
RM0018N15	108
RM0018N15E	110
RM0018N25	108
RM0018N25E	110
RM0018P80	108
RM0018P80E	110
RM0025N12	108
RM0025N12E	110
RM0025N20	108
RM0025N20E	110
RM0025P50	108
RM0025P50E	110
RM0035N12	108
RM0035N12E	110
RM0035N17	108
RM0035N17E	110
RM0035P40	108
RM0035P40E	110
RM0035P80	108
RM0035P80E	110
RM0045N12	108
RM0045N12E	110
RM0045P30	108
RM0045P30E	110
RM0045P70	108
RM0045P70E	110
RM0055P25	108
RM0055P25E	110
RM0055P50	108
RM0055P50E	110

Catalog Part No.	Catalog Page No.
RM0055P85	108
RM0055P85E	110
RM0080P20	108
RM0080P20E	110
RM0080P23	108
RM0080P23E	110
RM0080P40	108
RM0080P40E	110
RM0080P70	108
RM0080P70E	110
RM0110P15	108
RM0110P15E	110
RM0110P18	108
RM0110P18E	110
RM0110P30	108
RM0110P30E	110
RM0110P45	108
RM0110P45E	110
RM0130P10	108
RM0130P10E	110
RM0130P20	108
RM0130P20E	110
RM0130P30	108
RM0130P30E	110
RM0130P37	108
RM0130P37E	110
RM0160P15	108
RM0160P15E	110
RM0160P23	108
RM0160P23E	110
RM0160P32	108
RM0160P32E	110
RM0160U75	108
RM0160U75E	110
RM0200P11	109
RM0200P11E	111
RM0200P19	109
RM0200P19E	111
RM0200P24	109
RM0200P24E	111
RM0200U55	109
RM0200U55E	111
RM0250P15	109
RM0250P15E	111
RM0250P19	109
RM0250P19E	111
RM0250U45	109
RM0250U45E	111
RM0250U90	109
RM0250U90E	111
RM0320P13	109
RM0320P13E	111

Catalog Part No.	Catalog Page No.
RM0320P16	109
RM0320P16E	111
RM0320U40	109
RM0320U40E	111
RM0320U75	109
RM0320U75E	111
RM0320U96	109
RM0320U96E	111
RM0400P11	109
RM0400P11E	111
RM0400P14	109
RM0400P14E	111
RM0400U30	109
RM0400U30E	111
RM0400U61	109
RM0400U61E	111
RM0400U82	109
RM0400U82E	111
RM0500U25	109
RM0500U25E	111
RM0500U50	109
RM0500U50E	111
RM0500U57	109
RM0500U57E	111
RM0500U85	109
RM0500U85E	111
RM0500U96	109
RM0500U96E	111
RM0600U20	109
RM0600U20E	111
RM0600U40	109
RM0600U40E	111
RM0600U65	109
RM0600U65E	111
RM0600U80	109
RM0600U80E	111
RM0700U41	109
RM0700U41E	111
RM0700U68	109
RM0700U68E	111
RM0750U15	109
RM0750U15E	111
RM0750U25	109
RM0750U25E	111
RM0750U36	109
RM0750U36E	111
RM0750U60	109
RM0750U60E	111
RM0900U13	109
RM0900U13E	111
RM0900U26	109
RM0900U26E	111

© Hammond Power Solutions Inc.

Data subject to change without notice.

ALPHA NUMERIC PART NUMBER INDEX

Catalog Part No.	Catalog Page No.
RM0900U32	109
RM0900U32E	111
RM0900U43	109
RM0900U43E	111
RM0900U53	109
RM0900U53E	111
RM1000U11	109
RM1000U11E	111
RM1000U18	109
RM1000U18E	111
RM1000U29	109
RM1000U29E	111
RM1000U38	109
RM1000U38E	111
RM1000U48	109
RM1000U48E	111
RM1200U10	109
RM1200U10E	111
RM1200U15	109
RM1200U15E	111
RM1200U18	109
RM1200U18E	111
RM1200U24	109
RM1200U24E	111
RM1200U30	109
RM1200U30E	111
RM1200U40	109
RM1200U40E	111
S1EM015BB00	219
S1EM015BB00S	215
S1EM015BB30	221
S1EM015BB30S	217
S1EM015BK00	219
S1EM015BK00S	215
S1EM015BK30	221
S1EM015BK30S	217
S1EM015KB00	219
S1EM015KB00S	215
S1EM015KB30	221
S1EM015KB30S	217
S1EM015KK00	220
S1EM015KK00S	216
S1EM015KK30	222
S1EM015KK30S	218
S1EM015PB00	220
S1EM015PB00S	216
S1EM015PB30	222
S1EM015PB30S	218
S1EM015PK00	220
S1EM015PK00S	216
S1EM015PK30	222
S1EM015PK30S	218
S1EM030BB00	219
S1EM030BB00S	215
S1EM030BB30	221
S1EM030BB30S	217
S1EM030BK00	219
S1EM030BK00S	215
S1EM030BK30	221
S1EM030BK30S	217
S1EM030KB00	219
S1EM030KB00S	215
S1EM030KB30	221
S1EM030KB30S	217
S1EM030KK00	220
S1EM030KK00S	216
S1EM030KK30	222
S1EM030KK30S	218
S1EM030PB00	220
S1EM030PB00S	216
S1EM030PB30	222
S1EM030PB30S	218
S1EM030PK00	220
S1EM030PK00S	216
S1EM030PK30	222
S1EM030PK30S	218
S1EM045BB00	219
S1EM045BB00S	215
S1EM045BB30	221
S1EM045BB30S	217
S1EM045BK00	219
S1EM045BK00S	215
S1EM045BK30	221
S1EM045BK30S	217
S1EM045KB00	219
S1EM045KB00S	215
S1EM045KB30	221
S1EM045KB30S	217
S1EM045KK00	220
S1EM045KK00S	216
S1EM045KK30	222
S1EM045KK30S	218
S1EM045PB00	220
S1EM045PB00S	216
S1EM045PB30	222
S1EM045PB30S	218
S1EM045PK00	220
S1EM045PK00S	216
S1EM045PK30	222
S1EM045PK30S	218
S1EM075BB00	219
S1EM075BB00S	215
S1EM075BB30	221
S1EM075BB30S	217
S1EM075BK00	219
S1EM075BK00S	215
S1EM075BK30	221
S1EM075BK30S	217
S1EM075KB00	219
S1EM075KB00S	215
S1EM075KB30	221
S1EM075KB30S	217
S1EM075KK00	220
S1EM075KK00S	216
S1EM075KK30	222
S1EM075KK30S	218
S1EM075PB00	220
S1EM075PB00S	216
S1EM075PB30	222
S1EM075PB30S	218
S1EM075PK00	220
S1EM075PK00S	216
S1EM075PK30	222
S1EM075PK30S	218
S1EM112BB00	219
S1EM112BB00S	215
S1EM112BB30	221
S1EM112BB30S	217
S1EM112BK00	219
S1EM112BK00S	215
S1EM112BK30	221
S1EM112BK30S	217
S1EM112KB00	219
S1EM112KB00S	215
S1EM112KB30	221
S1EM112KB30S	217
S1EM112KK00	220
S1EM112KK00S	216
S1EM112KK30	222
S1EM112KK30S	218
S1EM112PB00	220
S1EM112PB00S	216
S1EM112PB30	222
S1EM112PB30S	218
S1EM112PK00	220
S1EM112PK00S	216
S1EM112PK30	222
S1EM112PK30S	218
S1EM150BB00	219
S1EM150BB00S	215
S1EM150BB30	221
S1EM150BB30S	217
S1EM150BK00	219
S1EM150BK00S	215
S1EM150BK30	221
S1EM150BK30S	217

© Hammond Power Solutions Inc.

Data subject to change without notice.

ALPHA NUMERIC PART NUMBER INDEX

Catalog Part No.	Catalog Page No.
S1EM150KB00	219
S1EM150KB00S	215
S1EM150KB30	221
S1EM150KB30S	217
S1EM150KK00	220
S1EM150KK00S	216
S1EM150KK30	222
S1EM150KK30S	218
S1EM150PB00	220
S1EM150PB00S	216
S1EM150PB30	222
S1EM150PB30S	218
S1EM150PK00	220
S1EM150PK00S	216
S1EM150PK30	222
S1EM150PK30S	218
S1EM225BB00	219
S1EM225BB00S	215
S1EM225BB30	221
S1EM225BB30S	217
S1EM225BK00	219
S1EM225BK00S	215
S1EM225BK30	221
S1EM225BK30S	217
S1EM225KB00	219
S1EM225KB00S	215
S1EM225KB30	221
S1EM225KB30S	217
S1EM225KK00	220
S1EM225KK00S	216
S1EM225KK30	222
S1EM225KK30S	218
S1EM225PB00	220
S1EM225PB00S	216
S1EM225PB30	222
S1EM225PB30S	218
S1EM225PK00	220
S1EM225PK00S	216
S1EM225PK30	222
S1EM225PK30S	218
S1EM300BB00	219
S1EM300BB00S	215
S1EM300BB30	221
S1EM300BB30S	217
S1EM300BK00	219
S1EM300BK00S	215
S1EM300BK30	221
S1EM300BK30S	217
S1EM300KB00	219
S1EM300KB00S	215
S1EM300KB30	221
S1EM300KB30S	217
S1EM300KK00	220
S1EM300KK00S	216
S1EM300KK30	222
S1EM300KK30S	218
S1EM300PB00	220
S1EM300PB00S	216
S1EM300PB30	222
S1EM300PB30S	218
S1EM300PK00	220
S1EM300PK00S	216
S1EM300PK30	222
S1EM300PK30S	218
S1EM500BB00	219
S1EM500BB00S	215
S1EM500BB30	221
S1EM500BB30S	217
S1EM500BK00	219
S1EM500BK00S	215
S1EM500BK30	221
S1EM500BK30S	217
S1EM500KB00	219
S1EM500KB00S	215
S1EM500KB30	221
S1EM500KB30S	217
S1EM500KK00	220
S1EM500KK00S	216
S1EM500KK30	222
S1EM500KK30S	218
S1EM500PB00	220
S1EM500PB00S	216
S1EM500PB30	222
S1EM500PB30S	218
S1EM500PK00	220
S1EM500PK00S	216
S1EM500PK30	222
S1EM500PK30S	218
S1EM750BB00	219
S1EM750BB00S	215
S1EM750BB30	221
S1EM750BB30S	217
S1EM750BK00	219
S1EM750BK00S	215
S1EM750BK30	221
S1EM750BK30S	217
S1EM750KB00	219
S1EM750KB00S	215
S1EM750KB30	221
S1EM750KB30S	217
S1EM750KK00	220
S1EM750KK00S	216
S1EM750KK30	222
S1EM750KK30S	218
S1EM750PB00	220
S1EM750PB00S	216
S1EM750PB30	222
S1EM750PB30S	218
S1EM750PK00	220
S1EM750PK00S	216
S1EM750PK30	222
S1EM750PK30S	218
SMF015BE	176
SMF015BEC	178
SMF015FE	176
SMF015FEC	178
SMF015HE	177
SMF015HEC	179
SMF015LE	176
SMF015LEC	178
SMF015PE	177
SMF015PEC	179
SMF015XE	177
SMF015XEC	179
SMF025BE	176
SMF025BEC	178
SMF025FE	176
SMF025FEC	178
SMF025HE	177
SMF025HEC	179
SMF025LE	176
SMF025LEC	178
SMF025PE	177
SMF025PEC	179
SMF025XE	177
SMF025XEC	179
SMF037BE	176
SMF037BEC	178
SMF037FE	176
SMF037FEC	178
SMF037HE	177
SMF037HEC	179
SMF037LE	176
SMF037LEC	178
SMF037PE	177
SMF037PEC	179
SMF037XE	177
SMF037XEC	179
SMF050BE	176
SMF050BEC	178
SMF050FE	176
SMF050FEC	178
SMF050HE	177
SMF050HEC	179
SMF050LE	176
SMF050LEC	178

© Hammond Power Solutions Inc.

Data subject to change without notice.

ALPHA NUMERIC PART NUMBER INDEX

Catalog Part No.	Catalog Page No.
SMF050PE	177
SMF050PEC	179
SMF050XE	177
SMF050XEC	179
SMF075BE	176
SMF075BEC	178
SMF075FE	176
SMF075FEC	178
SMF075HE	177
SMF075HEC	179
SMF075LE	176
SMF075LEC	178
SMF075PE	177
SMF075PEC	179
SMF075XE	177
SMF075XEC	179
SMF100BE	176
SMF100BEC	178
SMF100FE	176
SMF100FEC	178
SMF100HE	177
SMF100HEC	179
SMF100LE	176
SMF100LEC	178
SMF100PE	177
SMF100PEC	179
SMF100XE	177
SMF100XEC	179
SMF150BE	176
SMF150BEC	178
SMF150FE	176
SMF150FEC	178
SMF150HE	177
SMF150HEC	179
SMF150LE	176
SMF150LEC	178
SMF150PE	177
SMF150PEC	179
SMF150XE	177
SMF150XEC	179
SMF167BE	176
SMF167BEC	178
SMF167FE	176
SMF167FEC	178
SMF167HE	177
SMF167HEC	179
SMF167LE	176
SMF167LEC	178
SMF167PE	177
SMF167PEC	179
SMF167XE	177
SMF167XEC	179

Catalog Part No.	Catalog Page No.
SMK015BB	181
SMK015BBCN	185
SMK015BK	181
SMK015BKCN	185
SMK015DB	181
SMK015DBCN	185
SMK015DK	182
SMK015DKCN	186
SMK015KB	182
SMK015KBCN	186
SMK015KD	182
SMK015KDCN	186
SMK015KK	183
SMK015KKCN	187
SMK015PB	183
SMK015PBCN	187
SMK015PD	183
SMK015PDCN	187
SMK015PK	184
SMK015PKCN	188
SMK030BB	181
SMK030BBC	185
SMK030BK	181
SMK030BKC	185
SMK030DB	181
SMK030DBC	185
SMK030DK	182
SMK030DKC	186
SMK030KB	182
SMK030KBCN	186
SMK030KD	182
SMK030KDCN	186
SMK030KK	183
SMK030KKCN	187
SMK030PB	183
SMK030PBCN	187
SMK030PD	183
SMK030PDC	187
SMK030PK	184
SMK030PKCN	188
SMK045BB	181
SMK045BBC	185
SMK045BK	181
SMK045BKC	185
SMK045DB	181
SMK045DBC	185
SMK045DK	182
SMK045DKC	186
SMK045KB	182
SMK045KBC	186
SMK045KD	182
SMK045KDC	186

Catalog Part No.	Catalog Page No.
SMK045KK	183
SMK045KKC	187
SMK045PB	183
SMK045PBC	187
SMK045PD	183
SMK045PDC	187
SMK045PK	184
SMK045PKC	188
SMK075BB	181
SMK075BBC	185
SMK075BK	181
SMK075BKC	185
SMK075DB	181
SMK075DBC	185
SMK075DK	182
SMK075DKC	186
SMK075KB	182
SMK075KBC	186
SMK075KD	182
SMK075KDC	186
SMK075KK	183
SMK075KKC	187
SMK075PB	183
SMK075PBC	187
SMK075PD	183
SMK075PDC	187
SMK075PK	184
SMK075PKC	188
SMK112BB	181
SMK112BBC	185
SMK112BK	181
SMK112BKC	185
SMK112DB	181
SMK112DBC	185
SMK112DK	182
SMK112DKC	186
SMK112KB	182
SMK112KBC	186
SMK112KD	182
SMK112KDC	186
SMK112KK	183
SMK112KKC	187
SMK112PB	183
SMK112PBC	187
SMK112PD	183
SMK112PDC	187
SMK112PK	184
SMK112PKC	188
SMK150BB	181
SMK150BBC	185
SMK150BK	181
SMK150BKC	185

© Hammond Power Solutions Inc.

Data subject to change without notice.

ALPHA NUMERIC PART NUMBER INDEX

Catalog Part No.	Catalog Page No.
SMK150DB	181
SMK150DBC	185
SMK150DK	182
SMK150DKC	186
SMK150KB	182
SMK150KBC	186
SMK150KD	182
SMK150KDC	186
SMK150KK	183
SMK150KKC	187
SMK150PB	183
SMK150PBC	187
SMK150PD	183
SMK150PDC	187
SMK150PK	184
SMK150PKC	188
SMK225BB	181
SMK225BBC	185
SMK225BK	181
SMK225BKC	185
SMK225DB	181
SMK225DBC	185
SMK225DK	182
SMK225DKC	186
SMK225KB	182
SMK225KBC	186
SMK225KD	182
SMK225KDC	186
SMK225KK	183
SMK225KKC	187
SMK225PB	183
SMK225PBC	187
SMK225PD	183
SMK225PDC	187
SMK225PK	184
SMK225PKC	188
SMK300BB	181
SMK300BBC	185
SMK300BK	181
SMK300BKC	185
SMK300DB	181
SMK300DBC	185
SMK300DK	182
SMK300DKC	186
SMK300KB	182
SMK300KBC	186
SMK300KD	182
SMK300KDC	186
SMK300KK	183
SMK300KKC	187
SMK300PB	183
SMK300PBC	187
SMK300PD	183
SMK300PDC	187
SMK300PK	184
SMK300PKC	188
SMK500BB	181
SMK500BBC	185
SMK500BK	181
SMK500BKC	185
SMK500DB	181
SMK500DBC	185
SMK500DK	182
SMK500DKC	186
SMK500KB	182
SMK500KBC	186
SMK500KD	182
SMK500KDC	186
SMK500KK	183
SMK500KKC	187
SMK500PB	183
SMK500PBC	187
SMK500PD	183
SMK500PDC	187
SMK500PK	184
SMK500PKC	188
SMK750BB	181
SMK750BBC	185
SMK750BK	181
SMK750BKC	185
SMK750DB	181
SMK750DBC	185
SMK750DK	182
SMK750DKC	186
SMK750KB	182
SMK750KBC	186
SMK750KD	182
SMK750KDC	186
SMK750KK	183
SMK750KKC	187
SMK750PB	183
SMK750PBC	187
SMK750PD	183
SMK750PDC	187
SMK750PK	184
SMK750PKC	188
SMT13K015BBKN	200
SMT13K015BBS	198
SMT13K015BKKN	200
SMT13K015BKS	198
SMT13K015KBKN	200
SMT13K015KBS	198
SMT13K015KKKN	201
SMT13K015KKS	199
SMT13K015PBKN	201
SMT13K015PBS	199
SMT13K015PKKN	201
SMT13K015PKS	199
SMT13K030BBKN	200
SMT13K030BBS	198
SMT13K030BKKN	200
SMT13K030BKS	198
SMT13K030KBKN	200
SMT13K030KBS	198
SMT13K030KKKN	201
SMT13K030KKS	199
SMT13K030PBKN	201
SMT13K030PBS	199
SMT13K030PKKN	201
SMT13K030PKS	199
SMT13K045BBK	200
SMT13K045BBS	198
SMT13K045BKK	200
SMT13K045BKS	198
SMT13K045KBK	200
SMT13K045KBS	198
SMT13K045KKK	201
SMT13K045KKS	199
SMT13K045PBK	201
SMT13K045PBS	199
SMT13K045PKK	201
SMT13K045PKS	199
SMT13K075BBK	200
SMT13K075BBS	198
SMT13K075BKK	200
SMT13K075BKS	198
SMT13K075KBK	200
SMT13K075KBS	198
SMT13K075KKK	201
SMT13K075KKS	199
SMT13K075PBK	201
SMT13K075PBS	199
SMT13K075PKK	201
SMT13K075PKS	199
SMT13K112BBK	200
SMT13K112BBS	198
SMT13K112BKK	200
SMT13K112BKS	198
SMT13K112KBK	200
SMT13K112KBS	198
SMT13K112KKK	201
SMT13K112KKS	199
SMT13K112PBK	201
SMT13K112PBS	199
SMT13K112PKK	201
SMT13K112PKS	199

© Hammond Power Solutions Inc.

Data subject to change without notice.

ALPHA NUMERIC PART NUMBER INDEX

Catalog Part No.	Catalog Page No.
SMT13K150BBK	200
SMT13K150BBS	198
SMT13K150BKK	200
SMT13K150BKS	198
SMT13K150KBK	200
SMT13K150KBS	198
SMT13K150KKK	201
SMT13K150KKS	199
SMT13K150PBK	201
SMT13K150PBS	199
SMT13K150PKK	201
SMT13K150PKS	199
SMT13K225BBK	200
SMT13K225BBS	198
SMT13K225BKK	200
SMT13K225BKS	198
SMT13K225KBK	200
SMT13K225KBS	198
SMT13K225KKK	201
SMT13K225KKS	199
SMT13K225PBK	201
SMT13K225PBS	199
SMT13K225PKK	201
SMT13K225PKS	199
SMT13K300BBK	200
SMT13K300BBS	198
SMT13K300BKK	200
SMT13K300BKS	198
SMT13K300KBK	200
SMT13K300KBS	198
SMT13K300KKK	201
SMT13K300KKS	199
SMT13K300PBK	201
SMT13K300PBS	199
SMT13K300PKK	201
SMT13K300PKS	199
SMT13K500BBK	200
SMT13K500BBS	198
SMT13K500BKK	200
SMT13K500BKS	198
SMT13K500KBK	200
SMT13K500KBS	198
SMT13K500KKK	201
SMT13K500KKS	199
SMT13K500PBK	201
SMT13K500PBS	199
SMT13K500PKK	201
SMT13K500PKS	199
SMT13K750BBK	200
SMT13K750BBS	198
SMT13K750BKK	200
SMT13K750BKS	198
SMT13K750KBK	200
SMT13K750KBS	198
SMT13K750KKK	201
SMT13K750KKS	199
SMT13K750PBK	201
SMT13K750PBS	199
SMT13K750PKK	201
SMT13K750PKS	199
SP1000ACP	48
SP1000KHP	50
SP1000MQMJ	49
SP1000NJ	51
SP1000SP	52
SP100ACP	48
SP100AR	48
SP100KHP	50
SP100KHR	50
SP100MQMJ	49
SP100NJ	51
SP100PR	51
SP100QR	49
SP100SP	52
SP100SR	52
SP1500ACP	48
SP1500KHP	50
SP1500MQMJ	49
SP1500NJ	51
SP1500SP	52
SP150ACP	48
SP150AR	48
SP150KHP	50
SP150KHR	50
SP150MQMJ	49
SP150NJ	51
SP150PR	51
SP150QR	49
SP150SP	52
SP150SR	52
SP2000ACP	48
SP2000MQMJ	49
SP250ACP	48
SP250AR	48
SP250KHP	50
SP250KHR	50
SP250MQMJ	49
SP250NJ	51
SP250PR	51
SP250QR	49
SP250SP	52
SP250SR	52
SP3000ACP	48
SP3000MQMJ	49
SP350ACP	48
SP350AR	48
SP350KHP	50
SP350KHR	50
SP350MQMJ	49
SP350NJ	51
SP350PR	51
SP350QR	49
SP350SP	52
SP350SR	52
SP5000ACP	48
SP5000MQMJ	49
SP500ACP	48
SP500AR	48
SP500KHP	50
SP500KHR	50
SP500MQMJ	49
SP500NJ	51
SP500PR	51
SP500QR	49
SP500SP	52
SP500SR	52
SP50ACP	48
SP50AR	48
SP50KHP	50
SP50KHR	50
SP50MQMJ	49
SP50NJ	51
SP50PR	51
SP50QR	49
SP50SP	52
SP50SR	52
SP750ACP	48
SP750KHP	50
SP750MQMJ	49
SP750NJ	51
SP750SP	52
SPFBAK1	53
SPFG1	53
Y003CECB	247
Y003PKCB	247
Y003QTCB	247
Y006CECB	247
Y006PKCB	247
Y006QTCB	247
Y009CECB	247
Y009PKCB	247
Y009QTCF	247
Y015CECB	247
Y015PKCB	247
Y015QTCF	247
Y030CECF	247

© Hammond Power Solutions Inc.

Data subject to change without notice.

ALPHA NUMERIC PART NUMBER INDEX

Catalog Part No.	Catalog Page No.
Y030PKCF	247
Y030QTCN	247
Y045CECF	247
Y045PKCN	247
Y045QTC	247
Y075CECN	247
Y075PKCN	247
Y075QTC	247
Y112PKC	247
Y112QTC	247
Y150PKC	247
Y150QTC	247
Y225PKC	247
Y225QTC	247
Y300PKC	247
Y500PKC	247

Page Intentionally Left Blank

© Hammond Power Solutions Inc.

Data subject to change without notice.

ALPHA NUMERIC PART NUMBER INDEX

Catalog Part No.	Catalog Page No.	Catalog Part No.	Catalog Page No.	Catalog Part No.	Catalog Page No.

Page Intentionally Left Blank

© Hammond Power Solutions Inc.

Data subject to change without notice.

ALPHA NUMERIC PART NUMBER INDEX

Catalog Part No.	Catalog Page No.	Catalog Part No.	Catalog Page No.	Catalog Part No.	Catalog Page No.

Page Intentionally Left Blank

© Hammond Power Solutions Inc.

Data subject to change without notice.

ALPHA NUMERIC PART NUMBER INDEX

Catalog Part No.	Catalog Page No.	Catalog Part No.	Catalog Page No.	Catalog Part No.	Catalog Page No.

Page Intentionally Left Blank

© Hammond Power Solutions Inc.

Data subject to change without notice.

Yes, I am interested in receiving the following information on other HPS Products.

Literature Name	Code	Qty
Showcase of Products Brochure	SCOPB	_____
Transformer Products Catalog	HTP-12	_____
Medium Voltage Dry-Type Distribution (Power) Transformers	HPWR	_____
Capabilities Brochure	HPSCB8	_____
Energy Efficient Distribution Transformer Brochure	ENEDIS	_____
HPS Spartan® Industrial Open Core & Coil Control Transformer Brochure	SPACON	_____
HPS Imperator® Encapsulated Machine Tool Industrial Control Transformers	ENCCON	_____
HPS Fortress™ Commercial Encapsulated Brochure	FORPOT	_____
HPS Titan® Series Encapsulated Distribution Transformer Brochure	TSETB8	_____
HPS PowerPlus™ Mini Power Center Brochure	PWRPLS11	_____
Installation, Operation & Maintenance Guide - For Dry-Type Transformer Which utilize a NH Series, NJ1, NJ2, NJ3 Or NJ4 Enclosure	IOMGDDI	_____
Installation, Operation & Maintenance Guide - For Single Phase Encapsulated Transformers Up To 50 kVA	IOMGE1PH	_____
Installation, Operation & Maintenance Guide - For Three Phase Encapsulated Transformers Up To 150 kVA	IOMGE3PH	_____
Installation, Operation & Maintenance Guide - For Dry-Type Transformer Which Utilize A NJ6, NJ7 or P Series Enclosure	IOMGPOW	_____

The literature listed above is available either electronically as a free PDF download or paper copies. To access the free PDF versions, please go to "http://www.hammondpowersolutions.com/resources/more/". To receive paper copies of any of the catalogs, brochures or flyers shown above, please fill in the information below, photocopy this page and fax it to the following:

FAX TO: **Literature Services**
Hammond Power Solutions Inc.
Canada: (519) 822-9688
U.S.: (608) 356-2080

E-MAIL: catalog@hammondpowersolutions.com
Web: www.hammondpowersolutions.com

My need for Transformer Products is Immediate ☐ Future ☐

Please send me the name of your local HPS Sales Representative ☐
Please provide me with the name of the local Authorized HPS Distributor ☐

Name: _____ E-Mail Address: _____

Company: _____

Address: _____

City, State: _____

Zip Code: _____

Telephone: _____

Fax: _____

Please check one:

☐ Electrical Distributor ☐ Electronic Distributor
☐ Contractor ☐ Panel Builder
☐ MRO ☐ OEM
☐ Consultant ☐ Engineering Firm
☐ Other: _____

© Hammond Power Solutions Inc.
Data subject to change without notice.